Texas Instruments

Digital Logic

Pocket Data Book

2003 SLL

Digital Logic

Pocket Data Book

TEXAS INSTRUMENTS

IMPORTANT NOTICE

Texas Instruments Incorporated and its subsidiaries (TI) reserve the right to make corrections, modifications, enhancements, improvements, and other changes to its products and services at any time and to discontinue any product or service without notice. Customers should obtain the latest relevant information before placing orders and should verify that such information is current and complete. All products are sold subject to TI's terms and conditions of sale supplied at the time of order acknowledgment.

TI warrants performance of its hardware products to the specifications applicable at the time of sale in accordance with TI's standard warranty. Testing and other quality control techniques are used to the extent TI deems necessary to support this warranty. Except where mandated by government requirements, testing of all parameters of each product is not necessarily performed.

TI assumes no liability for applications assistance or customer product design. Customers are responsible for their products and applications using TI components. To minimize the risks associated with customer products and applications, customers should provide adequate design and operating safeguards.

TI does not warrant or represent that any license, either express or implied, is granted under any TI patent right, copyright, mask work right, or other TI intellectual property right relating to any combination, machine, or process in which TI products or services are used. Information published by TI regarding third–party products or services does not constitute a license from TI to use such products or services or a warranty or endorsement thereof. Use of such information may require a license from a third party under the patents or other intellectual property of the third party, or a license from TI under the patents or other intellectual property of TI.

Reproduction of information in TI data books or data sheets is permissible only if reproduction is without alteration and is accompanied by all associated warranties, conditions, limitations, and notices. Reproduction of this information with alteration is an unfair and deceptive business practice. TI is not responsible or liable for such altered documentation.

Resale of TI products or services with statements different from or beyond the parameters stated by TI for that product or service voids all express and any implied warranties for the associated TI product or service and is an unfair and deceptive business practice. TI is not responsible or liable for any such statements.

Mailing Address:

Texas Instruments
Post Office Box 655303
Dallas, Texas 75265

Copyright © 2002, Texas Instruments Incorporated

Little Logic

Series	Supply Voltage Vcc (V)	Operating Free-air Temperature Ta (℃)
SN74AUC1G/2G/3G	0.8～2.7	–40～85
SN74LVC1G/2G/3G	1.65～5.5	–40～85
SN74AHC1G	2.0～5.5	–40～85
SN74AHC1GxxH	2.0～5.5	–40～85
SN74AHC2GxxH	2.0～5.5	–40～85
SN74AHCT1G	4.5～5.5	–40～85

GATE/OCTAL/Widebus™/Widebus+

Series	Supply Voltage Vcc (V)	Operating Free-air Temperature Ta (℃)
SN74ABT	4.5～5.5	–40～85
SN74BCT SN74F SN74ALS SN74AS	4.5～5.5	0～70
SN74LS SN74S SN74xx(STD)	4.75～5.25	0～70
SN74AC SN74AC11 SN74AHC	2.0～5.5	–40～85
SN74HC	2.0～6.0	–40～85
SN74LV	2.0～5.5	–40～85
SN74LVC	2.0～3.6	–40～85
SN74LVT	2.7～3.6	–40～85
SN74ALVC	1.65～3.6	–40～85
SN74ALVT	2.3～3.6	–40～85
SN74AVC	1.4～3.6	–40～85

UNLESS OTHERWISE NOTED this document contains PRODUCTION DATA information current as of publication date. Products conform to specifications per the terms of Texas Instruments standard warranty.
Production processing does not necessarily include testing of all parameters.
See www.ti.com/sc/logic for the most current data sheets.

Little Logic

Series	Supply Voltage Vcc (V)	Operating Free-air Temperature Ta (°C)
SN74AUC1G/2G/3G	0.8 – 2.7	–40 – 85
SN74LVC1G/2G/3G	1.65 – 5.5	–40 – 85
SN74AHC1G	2.0 – 5.5	–40 – 85
SN74AHC1GxxH	2.0 – 5.5	–40 – 85
SN74AHC2GxxH	2.0 – 5.5	–40 – 85
SN74AHCT1G	4.5 – 5.5	–40 – 85

GALE/OCTAL/Widebus™/Widebus+

Series	Supply Voltage Vcc (V)	Operating Free-air Temperature Ta (°C)
SN74ABT	4.5 – 5.5	–40 – 85
SN74BCT SN74F SN74ALS SN74AS	4.5 – 5.5	0 – 70
SN74LS SN74S SN74xxx(STD)	4.75 – 5.25	0 – 70
SN74AC SN74ACT1 SN74AHC	2.0 – 5.5	–40 – 85
SN74HC	2.0 – 6.0	–40 – 85
SN74LV	2.0 – 5.5	–40 – 85
SN74LVC	2.0 – 3.6	–40 – 85
SN74LVT	2.7 – 3.6	–40 – 85
SN74ALVC	1.65 – 3.6	–40 – 85
SN74ALVT	2.3 – 3.6	–40 – 85
SN74AVC	1.4 – 3.6	–40 – 85

UNLESS OTHERWISE NOTED this document contains PRODUCTION DATA information current as of publication date. Products conform to specifications per the terms of Texas Instruments standard warranty.
Production processing does not necessarily include testing of all parameters.
See www.ti.com/sc/logic for the most current data sheets.

INDEX

INDEX

TTL

1GU04	SINGLE INVERTER GATE	28
1G06	SINGLE BUFFER/DRIVER WITH OPEN-DRAIN OUTPUT	29
1G07	SINGLE BUFFER/DRIVER WITH OPEN-DRAIN OUTPUT	29
1G08	SINGLE 2-INPUT POSITIVE-AND GATE	30
1G14	SINGLE SCHMITT-TRIGGER INVERTER	30
1G17	SINGLE SCHMITT-TRIGGER BUFFER	31
1G18	1-OF-2 NONINVERTING DEMULTIPLEXER WITH 3-STATE DESELECTED OUTPUT	31
1G32	SINGLE 2-INPUT POSITIVE-OR GATE	32
1G66	SINGLE ABILATERAL ANALOG SWITCH	32
1G79	SINGLE POSITIVE-EDGE-TRIGGERED D-TYPE FLIP-FLOP	33
1G80	SINGLE POSITIVE-EDGE-TRIGGERED D-TYPE FLIP-FLOP	33
1G86	SINGLE 2-INPUT EXCLUSIVE-OR GATE	34
1G125	SINGLE BUS BUFFER GATE WITH 3-STATE OUTPUT	34
1G126	SINGLE BUS BUFFER GATE WITH 3-STATE OUTPUT	35
1G240	SINGLE BUFFER/DRIVER WITH 3-STATE OUTPUT	35
2G00	DUAL 2-INPUT POSITIVE-NAND GATE	36
2G02	DUAL 2-INPUT POSITIVE-NOR GATE	36
2G04	DUAL INVERTER GATE	37
2GU04	DUAL INVERTER GATE	37
2G06	DUAL BUFFER/DRIVER WITH OPEN-DRAIN OUTPUTS	38
2G07	DUAL BUFFER/DRIVER WITH OPEN-DRAIN OUTPUTS	38
2G08	DUAL 2-INPUT POSITIVE-AND GATE	39
2G14	DUAL SCHMITT-TRIGGER INVERTER	39
2G17	DUAL SCHMITT-TRIGGER BUFFER	40
2G32	DUAL 2-INPUT POSITIVE-OR GATE	40
2G34	DUAL BUFFER GATE	41
2G53	DUAL ANALOG MULTIPLEXER/DEMULTIPLEXER	41
2G66	DUAL BILATERAL ANALOG SWITCH	42
2G74	SINGLE POSITIVE-EDGE-TRIGGERED D-TYPE FLIP-FLOP WITH CLEAR AND PRESET	42
2G86	DUAL 2-INPUT EXCLUSIVE-OR GATE	43
2G125	DUAL BUS BUFFER GATE WITH 3-STATE OUTPUTS	43
2G126	DUAL BUS BUFFER GATE WITH 3-STATE OUTPUTS	44
2G157	SINGLE 2-LINE TO 1-LINE DATA SELECTOR/MULTIPLEXER	44
2G240	DUAL BUFFER/DRIVER WITH 3-STATE OUTPUTS	45
2G241	DUAL BUFFER/DRIVER WITH 3-STATE OUTPUTS	45
3G04	TRIPLE INVERTER GATE	46
3G06	TRIPLE INVERTER BUFFER/DRIVER WITH OPEN-DRAIN OUTPUTS	46
3G07	TRIPLE BUFFER/DRIVER WITH OPEN-DRAIN OUTPUTS	47
3G14	TRIPLE SCHMITT-TRIGGER INVERTER	47
3G17	TRIPLE SCHMITT-TRIGGER BUFFER	48
3G34	TRIPLE BUFFER GATE	48

TTL

03	QUAD 2-INPUT NAND O.C.	142
04	HEX INVERTERS	143
U04	HEX INVERTERS	144
05	HEX INVERTERS O.C	144
06	HEX INVERTER BUFFERS/DRIVERS O.C	145
07	HEX BUFFERS/DRIVERS O.C	145
08	QUAD 2-INPUT AND	146
09	QUAD 2-INPUT AND O.C	147
10	TRIPLE 3-INPUT NAND	148
11	TRIPLE 3-INPUT AND	149
14	HEX SCHMITT-TRIGGER INVERTERS	150
16	HEX INVERTER BUFFERS/DRIVERS O.C	151
17	HEX BUFFERS/DRIVERS O.C	151
19	HEX SCHMITT-TRIGGER INVERTERS	152
20	DUAL 4-INPUT NAND	153
21	DUAL 4-INPUT AND	154
25	DUAL 4-INPUT NOR WITH STROBE	154
26	QUAD 2-INPUT HIGH VOLTAGE INTERFACE NAND	155
27	TRIPLE 3-INPUT NOR	155
30	8-INPUT NAND	156
31	DELAY ELEMENTS	156
32	QUAD 2-INPUT OR	157
33	QUAD 2-INPUT NOR BUFFERS O.C.	158
35	HEX NON-INVERTERS WITH O.C.	158
37	QUAD 2-INPUT NAND BUFFERS	159
38	QUAD 2-INPUT NAND BUFFERS O.C.	159
42	4-LINE TO 10-LINE DECODER	160
45	BCD-TO-DECIMAL DECODER/DRIVER	162
47	BCD-TO-SEVEN SEGMENT DECODERS/DRIVERS	164
51	AND-OR-INVERT	166
64	4-2-3-2 INPUT AND-OR-INVERT	167
73	DUAL J-K FLIP-FLOPS	168
74	DUAL D-TYPE FLIP-FLOPS	170
75	4-BIT BISTABLE LATCHES	172
85	4-BIT COMPARATORS	173
86	QUAD 2-INPUT EXCLUSIVE-OR	174
90	DECADE COUNTER	175
92	DIVIDE-BY-12 COUNTERS	176
93	4-BIT BINARY COUNTERS	177
97	SYNCHRONOUS 6-BIT BINARY RATE MULTIPLIER	178
107	DUAL J-K FLIP-FLOPS	180
109	DUAL J-$\overline{K}$ FLIP-FLOPS	182
112	DUAL J-K FLIP-FLOPS	184
121	MONOSTABLE MULTIVIBRATORS	186
122	MONOSTABLE MULTIVIBRATORS	187
123	DUAL MONOSTABLE MULTIVIBARATORS	188
124	DUAL VOLTAGE-CONTROLLED OSCILLATORS	189
125	QUAD BUS BUFFER GATES 3-STATE	190
126	QUAD BUS BUFFER GATES 3-STATE	191
128	LINE DRIVER	192

TTL CMOS BiCMOS SN74		Page
Device	Function	
132	QUAD 2-INPUT NAND SCHMITT TRIGGERS	192
133	13-INPUT NAND	193
136	QUAD EXCLUSIVE-OR O.C.	193
137	3-TO-8 LINE DECODERS/DEMULTIPLEXERS LATCH	194
138	3-TO-8 LINE DECODERS/DEMULTIPLEXERS	196
139	DUAL 2-TO-4 LINE DECODERS/DEMULTIPLEXERS	198
140	DUAL 4-INPUT NAND LINE DRIVERS	200
145	BCD-TO-DECIMAL DECODERS/DRIVERS	201
147	10-TO-4 LINE PRIORITY ENCODER	202
148	8-TO-3 LINE PRIORITY ENCODERS	204
150	1-OF-16 DATA SELECTOR	206
151	8-TO-1 LINE DATA SELECTORS/MULTIPLEXERS	208
153	DUAL 4-TO-1 LINE DATA SELECTORS/MULTIPLEXERS	210
154	4-TO-16 LINE DECODERS/DEMULTIPLEXER	212
155	DUAL 2-TO-4 LINE DECODERS/DEMULTIPLEXERS	214
156	DUAL 2-TO-4 LINE DECODERS/DEMULTIPLEXERS	216
157	QUAD 2-TO-1 LINE DATA SELECTORS/MULTIPLEXERS	218
158	QUAD 2-TO-1 LINE DATA SELECTORS/MULTIPLEXERS	220
159	4-TO-16 LINE DECODER/MULTIPLEXER	222
161	SYNCHRONOUS BINARY COUNTERS	224
163	SYNCHRONOUS BINARY COUNTERS	226
164	8-BIT SHIFT REGISTERS (P-OUT SERIAL)	228
165	8-BIT SHIFT REGISTERS (P-LOAD)	230
166	8-BIT SHIFT REGISTERS (P-LOAD)	232
169	UP-DOWN SYNCHRONOUS BINARY COUNTERS	234
170	4-BY-4 REGISTER FILES	236
173	4-BIT D-TYPE REGISTERS	238
174	HEX D-TYPE FLIP-FLOPS	240
175	QUAD D-TYPE FLIP-FLOPS	241
181	4-BIT ALU/FUNCTION GENERATORS	242
182	LOOK-AHEAD CARRY GENERATORS	244
190	SYNCHRONOUS UP/DOWN DECADE COUNTER	246
191	SYNCHRONOUS UP/DOWN COUNTERS	248
192	PRESETTABLE SYNCHRONOUS 4-BIT UP/DOWN COUNTERS	250
193	SYNCHRONOUS UP/DOWN DUAL CLOCK COUNTERS	252
194	4-BIT BIDIRECTIONAL SHIFT REGISTERS	254
195	4-BIT PARALLEL ACCESS SHIFT REGISTERS	256
221	DUAL MONOSTABLE MULTIVIBRATORS	258
237	3-TO-8 LINE DECODER DEMULTIPLEXER	260
238	3-TO-8-LINE DECODERS/DEMULTIPLEXERS	262
240	OCTAL BUS DRIVERS 3-STATE	264
240-1	OCTAL BUS DRIVERS /I_{OL}=48mA 3-STATE	264
241	OCTAL BUS DRIVERS 3-STATE	266
243	QUADRUPLE BUS TRANSCEIVERS	268
244	OCTAL BUS DRIVERS 3-STATE	270
244-1	OCTAL BUS DRIVERS /I_{OL}=48mA 3-STATE	270
245	OCTAL BUS TRANSCEIVERS 3-STATE	272
245-1	OCTAL BUS TRANSCEIVERS /I_{OL}=48mA 3-STATE	272
247	BCD-TO-SEVEN SEGMENT DECODERS/DRIVERS	274
250	1-OF-16 GENERATORS/MULTIPLEXER 3-STATE	276
251	DATA SELECTORS/MULTIPLEXERS 3-STATE	278
253	DUAL 4-TO-1 LINE DATA SELECTOR/ MULTIPLEXERS 3-STATE	280

TTL CMOS BiCMOS SN74		Page
Device	Function	
257	QUAD 2-TO-1 DATA SELECTOR/MULTIPLEXERS 3-STATE	282
258	QUAD 2-TO-1 DATA SELECTOR/MULTIPLEXERS 3-STATE	284
259	8-BIT ADDRESSABLE LATCHES	286
260	DUAL 5-INPUT NOR GATES	288
265	QUAD COMPLEMENTARY-OUTPUT ELEMENTS	289
266	QUAD 2-INPUT EXCLUSIVE-NOR O.C.	290
273	OCTAL D-TYPE FLIP-FLOPS	291
276	QUAD J-$\overline{K}$ FLIP-FLOPS	292
279	QUAD $\overline{S}$-$\overline{R}$ LATCHES	293
280	9-BIT PARITY GENERATORS/CHECKERS	294
283	4-BIT FULL ADDERS	296
286	9-BIT PARITY GENERATORS/CHECKERS	298
292	PROGRAMMABLE FREQUENCY DIVIDER/DIGITAL TIMER	300
293	4-BIT BINARY COUNTERS	302
294	PROGRAMMABLE FREQUENCY DIVIDER/DIGITAL TIMER	304
297	DIGITAL PLL FILTERS	306
298	QUAD 2-INPUT MULTIPLEXERS WITH STORAGE	308
299	8-BIT UNIVERSAL SHIFT/STORAGE REGISTERS	310
321	CRYSTAL-CONTROLLED OSCILLATOR	312
323	8-BIT BIDIRELTIONAL SHIFT/STORAGE REGISTERS	314
348	8-TO-3 LINE PRIORITY ENCODER	316
354	8-INPUT MULTIPLEXERS/REGISTERS 3-STATE	318
356	8-INPUT MULTIPLEXERS/REGISTERS 3-STATE	320
365	HEX BUS DRIVERS HEX BUFFERS/LINE DRIVERS 3-STATE	322
366	HEX BUS DRIVERS HEX BUFFERS/LINE DRIVERS 3-STATE	323
367	HEX BUS DRIVERS HEX BUFFERS/LINE DRIVERS 3-STATE	324
368	HEX BUS DRIVERS HEX BUFFERS/LINE DRIVERS 3-STATE	324
373	OCTAL D-TYPE LATCHES 3-STATE	325
374	OCTAL D-TYPE FLIP-FLOPS 3-STATE	326
375	QUAD LATCHES	327
377	OCTAL D-TYPE FLIP-FLOPS CLOCK	328
378	HEX D-TYPE FLIP-FLOPS CLOCK	329
390	DUAL DECADE COUNTERS	330
393	DUAL BINARY COUNTERS	331
395	4-BIT CASCADABLE SHIFT REGISTER 3-STATE	332
399	QUAD 2-INPUT MULTIPLEXER WITH STORAGE	334
423	MONO-STABLE MULTIVIBRATOR	335
442	QUADRUPLE TRIDIRECTIONAL BUS TRANSCEIVERS	336
465	OCTAL BUFFERS 3-STATE	338
518	8-BIT IDENTITY COMPARATOR	340
520	8-BIT IDENTITY COMPARATOR	342
521	8-BIT IDENTITY COMPARATOR	344
533	OCTAL D-TYPE LATCHES	346
534	OCTAL D-TYPE FLIP-FLOPS	347
540	OCTAL BUFFERS/DRIVERS 3-STATE	348
540-1	OCTAL BUFFERS/DRIVERS (I_{OL}=48mA)	348
541	OCTAL BUFFERS/DRIVERS 3-STATES	349
541-1	*OCTAL BUFFERS/DRIVERS (I_{OL}=48mA)*	*349*
543	OCTAL REGISTERED TRANSCEIVERS	350
561	SYNCHRONOUS 4-BIT COUNTER	352
563	OCTAL TRANSPARENT LATCHES	354
564	OCTAL D-TYPE FLIP-FLOPS	355
569	SYNCHRONOUS BINARY COUNTER 3-STATE	356

TTL CMOS SN74 BiCMOS		Page
Device	Function	
573	OCTAL D-TYPE LATCHES	358
574	OCTAL D-TYPE FLIP-FLOPS	359
575	OCTAL D-TYPE FLIP-FLOPS	360
576	OCTAL D-TYPE FLIP-FLOPS	361
577	OCTAL D-TYPE FLIP-FLOPS	362
580	OCTAL D-TYPE LATCHES	363
590	8-BIT COUNTER/OUTPUT REGISTER 3-STATE	364
592	8-BIT BINARY COUNTERES	366
593	8-BIT BINARY COUNTERES	368
594	8-BIT SHIFT REGISTERS	370
595	8-BIT SHIFT REGISTERS	372
596	8-BIT SHIFT REGISTERS	374
597	8-BIT SHIFT REGISTERS	376
598	8-BIT SHIFT REGISTERS	378
620	OCTAL BUS TRANSCEIVERS 3-STATE	380
621	OCTAL BUS TRANSCEIVERS O.C.	381
621-1	OCTAL BUS TRANSCEIVERS/I_{OL}=48mA	381
623	OCTAL BUS TRANSCEIVERS	382
624	VOLTAGE CONTROLLED OSCILLATORS	383
628	VOLTAGE CONTROLLED OSCILLATORS	384
629	VOLTAGE CONTROLLED OSCILLATORS	385
638	OCTAL BUS TRANSCEIVERS	386
638-1	OCTAL BUS TRANSCEIVERS/I_{OL}=48mA	386
639	OCTAL BUS TRANSCEIVERS	387
639-1	OCTAL BUS TRANSCEIVERS/I_{OL}=48mA	387
640	OCTAL BUS TRANSCEIVERS 3-STATE	388
640-1	OCTAL BUS TRANSCEIVERS/I_{OL}=48mA 3-STATE	388
641	OCTAL BUS TRANSCEIVERS O.C.	389
641-1	OCTAL BUS TRANSCEIVERS/I_{OL}=48mA O.C.	389
642	OCTAL BUS TRANSCEIVERS O.C.	390
642-1	OCTAL BUS TRANSCEIVERS/I_{OL}=48mA O.C.	390
645	OCTAL BUS TRANSCEIVERS 3-STATE	391
645-1	OCTAL BUS TRANSCEIVERS/I_{OL}=48mA 3-STATE	391
646	OCTAL BUS TRANSCEIVERS AND REGISTERS	392
646-1	OCTAL BUS TRANSCEIVERS AND REGISTERS/I_{OL}=48mA	392
647	OCTAL BUS TRANSCEIVERS AND REGISTERS	394
648	OCTAL BUS TRANSCEIVERS AND REGISTERS	396
651	OCTAL BUS TRANSCEIVERS AND REGISTERS	398
651-1	OCTAL BUS TRANSCEIVERS AND REGISTERS/I_{OL}=48mA	398
652	OCTAL BUS TRANSCEIVERS AND REGISTERS	400
653	OCTAL BUS TRANSCEIVERS AND REGISTERS	402
654	OCTAL BUS TRANSCEIVERS AND REGISTERS	404
657	OCTAL TRANSCEIVERS WITH PARITY GENERATORS/CHECKERS 3-STATE	406
666	8-BIT D-TYPE TRANSPARENT READ-BACK LATCHES	408
667	8-BIT D-TYPE TRANSPARENT READ-BACK LATCHES	410
669	SYNCHRONOUS UP/DOWN BINARY COUNTER	412
670	4 x 4 REGISTER FILE	414
673	16-BIT SHIFT REGISTER	416
674	16-BIT SHIFT REGISTER	418
679	ADRESS COMPARATOR	420
682	8-BIT IDENTITY COMPARATOR	422
684	8-BIT IDENTITY COMPARATOR	424

TTL CMOS SN74 BiCMOS		Page
Device	Function	
686	8-BIT IDENTITY COMPARATOR	426
688	8-BIT IDENTITY COMPARATOR	428
697	SYNCHRONOUS UP-DOWN COUNTERS	430
699	SYNCHRONOUS UP-DOWN COUNTERS	432
756	OCTAL BUFFER/LINE DRIVER WITH O.C. OUTPUTS	434
757	OCTAL BUFFER/LINE DRIVER WITH O.C. OUTPUTS	435
760	OCTAL BUFFER/LINE DRIVER WITH O.C. OUTPUTS	436
804	HEX 2-INPUT NAND DRIVERS	437
805	HEX 2-INPUT NOR DRIVERS	438
808	HEX 2-INPUT AND DRIVERS	438
821	10-BIT BUS INTERFACE FLIP-FLOPS	439
823	9-BIT BUS INTERFACE FLIP-FLOP	440
825	8-BIT BUS INTERFACE FLIP-FLOP	442
827	10-BIT BUFFERS/BUS DRIVERS	444
828	10-BIT BUFFERS/BUS DRIVERS	444
832	HEX 2-INPUT OR DRIVERS	445
833	10-BIT TO 9-BIT PARITY BUS TRANSCEIVERS	446
841	10-BIT BUS INTERFACE LATCHES	448
843	9-BIT BUS INTERFACE LATCHES	450
853	8-BIT TO 9-BIT PARITY BUS TRANSCEIVERS	452
857	HEX 2-TO-1 UNIVERSAL MULTIPLEXERS	454
861	10-BIT TRANSCEIVERS WITH 3-STATEOUTPUTS	456
863	9-BIT BUS TRANSCEIVER WITH 3-STATE OUTPUTS	457
867	8-BIT SYNCHRONOUS COUNTER	458
869	8-BIT SYNCHRONOUS COUNTER	460
870	DUAL 16-BY 4-BIT REGISTER FILES	462
873	DUAL 4-BIT D-TYPE LATCHES	464
874	DUAL 4-BIT D-TYPE FLIP-FLOPS	465
876	DUAL 4-BIT D-TYPE FLIP-FLOPS WITH INVERTED OUTPUTS	466
885	8-BIT MAGNITUDE COMPARATOR	468
990	8-BIT D-TYPE TRANSPARENT READ-BACK LATCHES	470
992	9-BIT D-TYPE TRANSPARENT READ-BACKLATCHES 3-STATE	471
994	10-BIT D-TYPE TRANSPARENT READ-BACK LATCHES	472
996	8-BIT D-TYPE EDGE-TRIGGERED READ-BACK LATCHES	474
1000	QUAD 2-INPUT NAND BUFFERS/DRIVERS	476
1004	HEX INVERTER	476
1005	HEX INVERTER O.C.	477
1008	QUAD 2-INPUT AND BUFFERS/DRIVERS	477
1032	QUAD 2-INPUT OR BUFFERS/DRIVERS	478
1034	HEX DRIVERS	478
1035	HEX BUFFERS O.C.	479
1240	OCTAL BUS DRIVER	479
1244	OCTAL BUS DRIVER 3-STATE	480
1245	OCTAL BIDIRECTIONAL BUS TRANSCEIVER 3-STATE	480
1640	OCTAL BIDIRECTIONAL BUS TRANSCEIVER 3-STATE	481
1645	OCTAL BIDIRECTIONAL BUS TRANSCEIVER 3-STATE	481
2240	OCTAL BUFFERS AND LINE DRIVERS MOS DRIVERS WITH 3-STATE OUTPUTS	482
2241	OCTAL LINE MOS DRIVERS WITH SERIES DUMPING REGISTER, NON-INVERTING	483

TTL		
2245	OCTAL TRANSCEIVER AND LINE/MOS DRIVERS WITH 3-STATE OUTPUTS	485
2373	25-Ω OCTAL TRANSPARENT D-TYPE LATCH WITH 3-STATE OUTPUTS	486
2414	MEMORY DECODER WITH ON-CHIP V_{CC} MONITOR	488
2541	OCTAL LINE DRIVERS/MOS DRIVERS WITH 3-STATE OUTPUTS	490
2827	10-BIT BUS/MOS MEMORY DRIVERS	490
2828	10-BIT BUS/MOS MEMORY DRIVERS INVERTING	491
2952	REGISTERED TRANSCEIVERS (2mA, 24mA, 48mA, 64mA)	492
2953	REGISTERED TRANSCEIVERS (2mA, 24mA, 48mA, 64mA)	494
3245	OCTAL BUS TRANSCEIVER 3-STATE	496
4002	DUAL 4-INPUT POSITIVE-NOR GATES	497
4015	DUAL 4-STAGE STATIC SHIFT REGISTER	498
4016	QUAD BILATERAL SWITCH	499
4017	DECADE COUNTERS/DRIVERS	500
4020	14-STAGE BINARY COUNTERS	502
4024	7-STAGE BINARY COUNTERS	503
4040	12-STAGE BINARY COUNTERS	504
4046	PHASE-LOCKED-LOOP WITH VCO	505
4049	HEX INVERTING BUFFERS	506
4050	HEX NON-INVERTING BUFFERS	506
4051	8-CHANNEL ANALOG MULTIPLEXERS/DEMULTIPLEXERS	507
4052	DUAL 4-CHANNEL ANALOG MULTIPLEXERS/DEMULTIPLEXERS	508
4053	TRIPLE 2-CHANNEL ANALOG MULTIPLEXERS/DEMULTIPLEXERS	509
4059	CMOS PROGRAMMABLE DIVIDE-BY-N COUNTER	510
4060	ASYNCHRONOUS 14-STAGE BINARY COUNTERS AND OSCILLATORS	511
4066	QUAD BILATERAL SWITCHES	512
4067	16-CHANNEL ANALOG MULTIPLEXER/DEMULTIPLEXER	513
4075	TRIPLE 3-INPUT OR GATES	514
4094	8-STAGE SHIFT AND STORE BUS REGISTER, THREE-STATE	516
4245	OCTAL BUS TRANSCEIVER AND 3.3-V TO 5-V SHIFTER WITH 3-STATE OUTPUTS	518
4316	QUAD ANALOG SWITCH WITH LEVEL TRANSLATION	519
4351	ANALOG MULTIPLEXERS/DEMULTIPLEXERS WITH LATCH	520
4352	ANALOG MULTIPLEXERS/DEMULTIPLEXERS WITH LATCH	521
4374	OCTAL EDGE-TRIGGERED D-TYPE DUAL-RANK FLIP-FLOP WITH 3-STATE OUTPUTS	522
4511	BCD-TO-7 SEGMENT LATCH/DECODER/DRIVERS	523
4514	4-LINE TO 16-LINE DECODERS/DEMULTIPLEXERS WITH INPUT LATCHES	524
4515	4-LINE TO 16-LINE DECODERS/DEMULTIPLEXERS WITH INPUT LATCHES	526
4518	DUAL SYNCHRONOUS COUNTERS	528
4520	DUAL SYNCHRONOUS COUNTERS	529
4538	DUAL RETRIGGERABLE PRECISION MONOSTABLE MULTIVIBRATOR	530
4543	BCD-TO-7 SEGMENT LATCH/DECODER/DRIVERS	532
5400	11-BIT LINE/MEMORY DRIVERS WITH 3-STATE OUTPUTS	534
5403	11-BIT LINE/MEMORY DRIVERS WITH 3-STATE OUTPUTS	535
7001	QUAD POSITIVE-AND GATES WITH SCHMITT-TRIGGER INPUTS	536
7002	QUAD POSITIVE-NOR GATES WITH SCHMITT-TRIGGER INPUTS	536
7032	QUAD 2-INPUT POSITIVE-OR GATES WITH SCHMITT-TRIGGER INPUTS	537
7046	PHASE-LOCKED LOOP WITH VCO AND LOCK DETECTOR	538
7266	QUAD 2-INPUT EXCLUSIVE-NOR GATES	539
8003	DUAL 2-INPUT NAND GATES	539
16240	16-BIT BUS BUFFERS/DRIVERS WITH 3-STATE OUTPUTS	540
16241	16-BIT BUS BUFFERS/DRIVERS WITH 3-STATE OUTPUTS	542
16244	16-BIT BUS BUFFERS/DRIVERS WITH 3-STATE OUTPUTS	544
16245	16-BIT BUS TRANSCEIVER WITH 3-STATE OUTPUTS	546
16260	12-BIT TO 24-BIT MULTIPLEXES D-TYPE LATCH WITH 3-STATE OUTPUTS	548
16269	12-BIT TO 24-BIT REGISTERED BUS TRANSCEIVER WITH 3-STATE OUTPUTS	550
16270	12-BIT TO 24-BIT REGISTERED BUS EXCHANGER WITH 3-STATE OUTPUTS	552
16271	12-BIT TO 24-BIT MULTIPLEXED BUS EXCHANGER WITH 3-STATE OUTPUTS	554
16282	18-BIT TO 36-BIT REGISTERED BUS EXCHANGER WITH 3-STATE OUTPUTS	556
16334	16-BIT UNIVERSAL BUS DRIVER WITH 3-STATE OUTPUTS	558
16344	1-BIT TO 4-BIT ADDRESS DRIVER WITH 3-STATE OUTPUTS	560
16373	16-BIT TRANSPARENT LATCHES WITH 3-STATE OUTPUTS	562
16374	16-BIT EDGE-TRIGGERED D-TYPE FLIP-FLOPS WITH 3-STATE OUTPUTS	564
16409	9-BIT, 4-PORT UNIVERSAL BUS EXCHANGER WITH 3-STATE OUTPUTS	566
16460	4-TO-1 MULTIPLEXED/DEMULTIPLEXED TRANSCEIVERS WITH 3-STATE OUTPUTS	568
16470	16-BIT REGISTERED TRANSCEIVERS WITH 3-STATE OUTPUTS	570
16500	18-BIT UNIVERSAL BUS TRANSCEIVER WITH 3-STATE OUTPUTS	572
16501	18-BIT UNIVERSAL BUS TRANSCEIVER WITH 3-STATE OUTPUTS	574
16524	18-BIT REGISTERED BUS TRANSCEIVER WITH 3-STATE OUTPUTS	576
16525	18-BIT REGISTERED BUS TRANSCEIVER WITH 3-STATE OUTPUTS	578
16540	16-BIT BUFFERS/DRIVERS WITH 3-STATE OUTPUTS	580
16541	16-BIT BUFFERS/DRIVERS WITH 3-STATE OUTPUTS	581
16543	16-BIT REGISTERED TRANSCEIVERS WITH 3-STATE OUTPUTS	582
16600	18-BIT UNIVERSAL BUS TRANSCEIVERS WITH 3-STATE OUTPUTS	584
16601	18-BIT UNIVERSAL BUS TRANSCEIVERS WITH 3-STATE OUTPUTS	586
16620	16-BIT BUS TRANSCEIVERS WITH 3-STATE OUTPUTS	588
16623	16-BIT BUS TRANSCEIVERS WITH 3-STATE OUTPUTS	590

16646	16-BIT BUS TRANSCEIVERS AND REGISTERS WITH 3-STATE OUTPUTS	592
16651	16-BIT BUS TRANSCEIVERS AND REGISTERS WITH 3-STATE OUTPUTS	594
16652	16-BIT BUS TRANSCEIVERS AND REGISTERS WITH 3-STATE OUTPUTS	596
16657	16-BIT TRANSCEIVERS WITH PARITY GENERATORS/ CHECKERS AND 3-STATE OUTPUTS	598
16721	20-BIT FLIP-FLOP WITH 3-STATE OUTPUTS	600
16722	22-BIT FLIP-FLOP WITH 3-STATE OUTPUTS	601
16820	10-BIT EDGE-TRIGGERED D-TYPE FLIP-FLOPS WITH DUAL OUTPUTS	602
16821	20-BIT BUS INTERFACE FLIP-FLOPS WITH 3-STATE OUTPUTS	603
16823	18-BIT EDGE-TRIGGERED D-TYPE FLIP-FLOPS WITH DUAL OUTPUTS	604
16825	18-BIT BUS BUFFERS/DRIVERS WITH 3-STATE OUTPUTS	605
16827	20-BIT BUS BUFFERS/DRIVERS WITH 3-STATE OUTPUTS	606
16831	1-TO-4 ADDRESS REGISTER/DRIVER WITH 3-STATE OUTPUTS	607
16832	1-TO-4 ADDRESS REGISTER/DRIVER WITH 3-STATE OUTPUTS	608
16833	DUAL 8-BIT TO 9-BIT PARITY BUS TRANSCEIVERS	610
16834	16-BIT UNIVERSAL BUS DRIVER WITH 3-STATE OUTPUTS	612
16835	3.3-V ABT 18-BIT UNIVERSAL BUS DRIVER WITH 3-STATE OUTPUTS	613
16841	20-BIT BUS INTERFACE D-TYPE LATCHES WITH 3-STATE OUTPUTS	614
16843	18-BIT BUS INTERFACE D-TYPE LATCHES WITH 3-STATE OUTPUTS	615
16853	DUAL 8-BIT TO 9-BIT PARITY BUS TRANSCEIVERS	616
16861	20-BIT BUS TRANSCEIVERS WITH 3-STATE OUTPUTS	618
16863	18-BIT BUS TRANSCEIVERS WITH 3-STATE OUTPUTS	619
16901	18-BIT UNIVERSAL BUS TRANSCEIVER WITH PARITY GENERATORS/CHECKERS	620
16903	3.3-V 12-BIT UNIVERSAL BUS DRIVER WITH PARITY CHECKER AND DUAL 3-STATE OUTPUTS	622
16952	16-BIT REGISTERED TRANSCEIVERS WITH 3-STATE OUTPUTS	624
25244	25Ω OCTAL BUS BUFFERS/DRIVERS WITH 3-STATE OUTPUTS	626
25245	25Ω OCTAL BUS TRANSCEIVERS WITH 3-STATE OUTPUTS	627
25642	25-Ω OCTAL BUS TRANSCEIVER	628
29821	10-BIT BUS-INTERFACE FLIP-FLOPS WITH 3-STATE OUTPUTS	629
29825	8-BIT BUS-INTERFACE FLIP-FLOPS WITH 3-STATE OUTPUTS	630
29827	10-BIT BUFFERS AND BUS DRIVERS WITH 3-STATE OUTPUTS	631
29828	10-BIT BUFFERS AND BUS DRIVERS WITH 3-STATE OUTPUTS	632
29841	10-BIT BUS INTERFACE D-TYPE LATCHES WITH 3-STATE OUTPUTS	633
29843	WITH 3-STATE OUTPUTS	634
29854	8-BIT TO 9-BIT PARITY BUS TRANSCEIVER	636
29863	9-BIT BUS TRANSCEIVERS WITH 3-STATE OUTPUTS	638
29864	9-BIT BUS TRANSCEIVERS WITH 3-STATE OUTPUTS	639
32240	32-BIT BUFFER/DRIVER WITH 3-STATE OUTPUTS	640
32244	36-BIT BUFFER/DRIVER WITH 3-STATE OUTPUTS	642
32245	36-BIT BUS TRANSCEIVER WITH 3-STATE OUTPUTS	644
32316	16-BIT TRI-PORT UNIVERSAL BUS EXCHANGERS	646
32318	18-BIT TRI-PORT UNIVERSAL BUS EXCHANGERS	648
32373	32-BIT TRANSPARENT D-TYPE LATCH WITH 3-STATE OUTPUTS	650
32374	32-BIT EDGE-TRIGGERED D-TYPE FLIP-FLOP WITH 3-STATE OUTPUTS	652
32501	36-BIT UNIVERSAL BUS TRANSCEIVERS WITH 3-STATE OUTPUTS	654
32543	36-BIT REGISTERED BUS TRANSCEIVERS WITH 3-STATE OUTPUTS	656
40103	8-STAGE SYNCHRONOUS DOWN COUNTERS	658
162240	3.3-V ABT 16-BIT BUFFERS/DRIVERS WITH 3-STATE OUTPUTS	659
162241	3.3-V ABT 16-BIT BUFFERS/DRIVERS WITH 3-STATE OUTPUTS	660
162244	16-BIT BUFFERS/DRIVERS WITH 3-STATE OUTPUTS	661
162245	16-BIT TRANSCEIVER WITH 3-STATE OUTPUTS	662
162260	12-BIT TO 24-BIT MULTIPLEXED D-TYPE LATCH WITH 3-STATE OUTPUTS	664
162268	12-BIT TO 24-BIT REGISTERED BUS EXCHANGER WITH 3-STATE OUTPUTS	666
162280	16-BIT TO 32-BIT REGISTERED BUS EXCHANGER WITH BYTE MASKS AND 3-STATE OUTPUTS	668
162282	18-BIT TO 36-BIT REGISTERED BUS EXCHANGER WITH 3-STATE OUTPUTS	670
162334	16-BIT UNIVERSAL BUS DRIVER WITH 3-STATE OUTPUTS	672
162344	1-BIT TO 4-BIT ADDRESS DRIVER WITH 3-STATE OUTPUTS	674
162373	3.3-V ABT 16-BIT TRANSPARENT D-TYPE LATCHES WITH 3-STATE OUTPUTS	676
162374	3.3-V ABT 16-BIT EDGE-TRIGGERED D-TYPE FLIP-FLOPS WITH 3-STATE OUTPUTS	677
162460	4-TO-1 MULTIPLEXED/DEMULTIPLEXED REGISTERED TRANSCEIVERS WITH 3-STATE OUTPUTS	678
162500	18-BIT UNIVERSAL BUS TRANSCEIVER WITH 3-STATE OUTPUTS	680
162501	18-BIT UNIVERSAL BUS TRANSCEIVERS WITH 3-STATE OUTPUTS	682
162525	16-BIT REGISTERED BUS TRANSCEIVER WITH 3-STATE OUTPUTS	684
162541	3.3-V ABT 16-BIT BUFFERS/DRIVERS WITH 3-STATE OUTPUTS	686
162601	18-BIT UNIVERSAL BUS TRANSCEIVER WITH 3-STATE OUTPUTS	688
162721	3.3-V 20-BIT FLIP-FLOP WITH 3-STATE OUTPUTS	690
162820	3.3-V 10-BIT FLIP-FLOP WITH DUAL OUTPUTS AND 3-STATE OUTPUTS	691
162823	18-BIT BUS-INTERFACE FLIP-FLOPS WITH 3-STATE OUTPUTS	692

TTL CMOS SN74 BiCMOS		Page
Device	Function	
162825	18-BIT BUFFERS/DRIVERS WITH 3-STATE OUTPUTS	693
162827	20-BIT BUS BUFFERS/DRIVERS WITH 3-STATE OUTPUTS	694
162830	1-BIT TO 2-BIT ADDRESS DRIVER WITH 3-STATE OUTPUTS	695
162831	1-BIT TO 4-BIT ADDRESS REGISTER/DRIVER WITH 3-STATE OUTPUTS	696
162832	1-BIT TO 4-BIT ADDRESS REGISTER/DRIVER WITH 3-STATE OUTPUTS	697
162834	18-BIT UNIVERSAL BUS DRIVER WITH 3-STATE OUTPUTS	698
162835	18-BIT UNIVERSAL BUS DRIVER WITH 3-STATE OUTPUTS	699
162836	20-BIT UNIVERSAL BUS DRIVER WITH 3-STATE OUTPUTS	700
162841	20-BIT BUS-INTERFACE D-TYPE LATCH WITH 3-STATE OUTPUTS	701
164245	16-BIT TRANSCEIVER AND 3.3-V TO 5-V SHIFTER WITH 3-STATE OUTPUTS	702
322374	3.3-V ABT 32-BIT EDGE-TRIGGERED D-TYPE FLIP-FLOP WITH 3-STATE OUTPUTS	703

FUNCTION

1G / 2G / 3G

FUNCTION

1G \ 2G \ 3G

LITTLE LOGIC GATE (AND/NAND/OR/NOR/EX-OR)

Description	No. of Input	Curcuit	Input	Output	Type	Technology														
						CMOS		BiCMOS				Advanced CMOS								
						HC	HCT	BCT	ABT	LVT	ALVT	AC	ACT	AHC	AHCT	LV	LVC	ALVC	AVC	AUC
POSITIVE-AND	2	1			1G08									○	○		○			○
		2			2G08												○			*
POSITIVE-NAND	2	1			1G00									○	○		○			○
		2			2G00												○			*
POSITIVE- OR	2	1			1G32									○	○		○			○
		2			2G32												○			*
POSITIVE- NOR	2	1			1G02									○	○		○			○
		2			2G02												○			*
EXCLUSIVE-OR	2	1			1G86									○	○		○			*
		2			2G86												○			*

Explanatory notes [Input] SCH : Schmitt-Trigger Inputs
[Output] BUF : Buffered Output OC : Open-Collector Output 3S : 3-State Output
Status ○ : Product available in technology indicated * : New product planned in technology indicated × : Discontinued

LITTLE LOGIC GATE (INVERTER/NONINVERTER)

Description	No. of Input	Curcuit	Input	Output	Type	Technology														
						CMOS		BiCMOS				Advanced CMOS								
						HC	HCT	BCT	ABT	LVT	ALVT	AC	ACT	AHC	AHCT	LV	LVC	ALVC	AVC	AUC
INVERTING	1	1			1G04									○	○		○			○
				UBF	1GU04									○			○			○
				OC	1G06												○			○
			SCH		1G14									○	○		○			○
		2			2G04												○			*
				UBF	2GU04												○			*
				OC	2G06												○			*
			SCH		2G14												○			*
		3			2G04												○			*
					3G04												○			*
				UBF	3GU04												*			
				OC	3G06												○			*
			SCH		2G14												○			*
			SCH		3G14												○			*
NON-INVERTING	1	1		OC	1G07												○			○
			SCH		1G17												○			○
					1G66												○			○
		2		OC	2G07												○			*
			SCH		2G17												○			*
					2G34												○			*
					2G66												○			*
		3		OC	3G07												○			*
			SCH		3G17												*			*
					2G34												○			*
					3G34												○			*

Explanatory notes [Input] SCH : Schmitt-Trigger Inputs
[Output] BUF : Buffered Output OC : Open-Collector Output 3S : 3-State Output
Status ○ : Product available in technology indicated * : New product planned in technology indicated × : Discontinued

LITTLE LOGIC BUFFER/DRIVER

Description	Curcuit	Output	Type	Technology														
				CMOS		BiCMOS				Advanced CMOS								
				HC	HCT	BCT	ABT	LVT	ALVT	AC	ACT	AHC	AHCT	LV	LVC	ALVC	AVC	AUC
NON-INVERTING	1	3S	1G125									○	○		○			○
		3S	1G126									○	○		○			○
	2	3S	2G125												○			*
		3S	2G126												○			*
		3S	2G241												○			*
INVERTING	1	3S	1G240												○			○

Explanatory notes Output 3S : 3-State Output R3S : Series Resistor and 3-State output OC : Open-Collector Output
Status ○ : Product available in technology indicated * : New product planned in technology indicated × : Discontinued

LITTLE LOGIC D-TYPE FLIP-FLOP

Trigger	Curcuit	PRE · CLR	Output	Q · /Q	Type	Technology														
						CMOS		BiCMOS				Advanced CMOS								
						HC	HCT	BCT	ABT	LVT	ALVT	AC	ACT	AHC	AHCT	LV	LVC	ALVC	AVC	AUC
POS	1		2S	Q	1G79												○			*
			2S	/Q	1G80												○			*
		B	2S	B	2G74												○			*

Explanatory notes [Trigger] POS : POSITIVE EDGE、NEG : NEGATIVE EDGE
[PRE · CLR] B : Preset and Clear、C : Clear only
[Output] 2S : Totem pole Output 3S : 3-State Output
[Q·/Q] B : Q·/Q-Output Q : Q-Output /Q : /Q-Output
Status ○ : Product available in technology indicated * : New product planned in technology indicated × : Discontinued

LITTLE LOGIC Data Selectors/Multiplexers

No. of Input/Output	Output	Curcuit	Type	Technology														
				CMOS		BiCMOS				Advanced CMOS								
				HC	HCT	BCT	ABT	LVT	ALVT	AC	ACT	AHC	AHCT	LV	LVC	ALVC	AVC	AUC
2/1	2S	1	2G157												○			*

Explanatory notes [Output] 2S : Totem Pole Output 3S : 3-State Output OC : Open-Collector Output
Status ○ : Product available in technology indicated * : New product planned in technology indicated × : Discontinued

LITTLE LOGIC ANALOG SWITCH

Description	Type	Technology														
		CMOS		BiCMOS				Advanced CMOS								
		HC	HCT	BCT	ABT	LVT	ALVT	AC	ACT	AHC	AHCT	LV	LVC	ALVC	AVC	AUC
SINGLE ANALOG SWITCH	1G66												○			○
One of Two Noninverting Demultiplexer with 3-State Deselected Output	1G18												○			
SINGLE 2-CHANNELANALOG MULTIPLEXERS/DEMULTIPLEXERS	2G53												○			*
DUAL ANALOG SWITCH	2G66												○			*

Status ○ : Product available in technology indicated * : New product planned in technology indicated × : Discontinued

PIN ASSIGNMENTS

1G / 2G / 3G

PIN ASSIGNMENTS

1G / 2G / 3G

Pin Assinments

1G00
SINGLE 2-INPUT POSITIVE-NAND GATE
$Y = \overline{AB}$

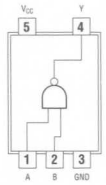

See page 27

1G02
SINGLE 2-INPUT POSITIVE-NOR GATE
$Y = \overline{A + B}$

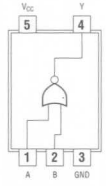

NC – No internal connection

See page 27

1G04
SINGLE INVERTER GATE
$Y = \overline{A}$

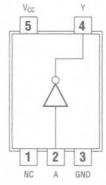

NC – No internal connection

See page 28

1GU04
SINGLE INVERTER
$Y = \overline{A}$

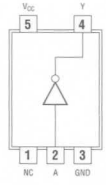

NC – No internal connection

See page 28

1G06
SINGLE INVERTER BUFFER/DRIVER WITH OPEN-DRAIN OUTPUT

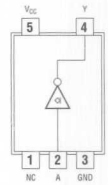

NC – No internal connection

See page 29

1G07
SINGLE BUFFER/DRIVER WITH OPEN-DRAIN OUTPUT

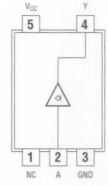

See page 29

1G08
SINGLE 2-INPUT POSITIVE-AND GATE
$Y = AB$

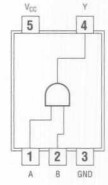

See page 30

1G14
SINGLE SCHMITT-TRIGGER INVERTER GATE
$Y = \overline{A}$

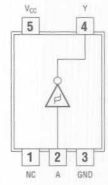

NC – No internal connection

See page 30

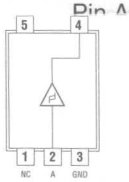

NC – No internal connection

See page 31

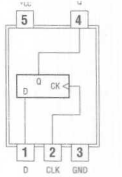

See page 33

1G18

1-OF-2 NONINVERTING DEMULTIPLEXER WITH 3-STATE DESELECTED OUTPUT

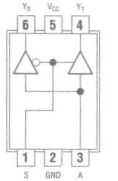

See page 31

1G32

SINGLE 2-INPUT POSITIVE-OR GATE

$Y = A + B$

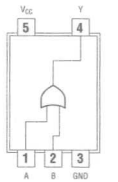

See page 32

1G66

SINGLE ABILATERAL ANALOG SWITCH

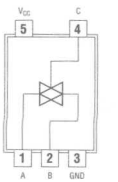

See page 32

1G80

SINGLE POSITIVE-EDGE-TRIGGERED D-TYPE FLIP-FLOP

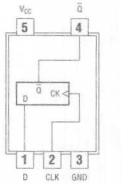

See page 33

1G86

SINGLE 2-INPUT EXCLUSIVE-OR GATE

$Y = A \oplus B = \overline{A}B + A\overline{B}$

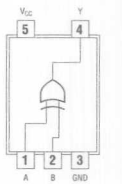

See page 34

1G125

SINGLE BUS BUFFER GATE WITH 3-STATE OUTPUT

$Y = A$

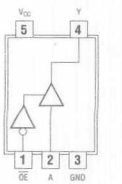

See page 34

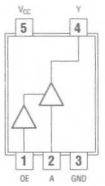

See page 35

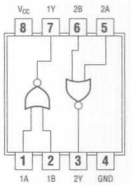

See page 36

1G240

SINGLE BUFFER/DRIVER WITH 3-STATE OUTPUT

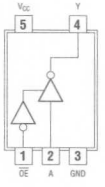

See page 35

2G04

DUAL INVERTER GATE

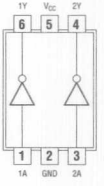

See page 37

2G00

DUAL 2-INPUT POSITIVE-NAND GATE

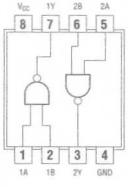

See page 36

2GU04

DUAL INVERTER GATE

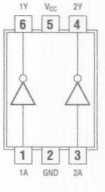

See page 37

Pin Assinments

2G06
DUAL INVERTER BUFFER/DRIVER WITH OPEN-DRAIN OUTPUTS

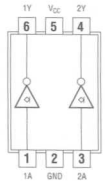

See page 38

2G07
DUAL BUFFER/DRIVER WITH OPEN-DRAIN OUTPUTS

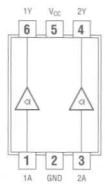

See page 38

2G08
DUAL 2-INPUT POSITIVE-AND GATE

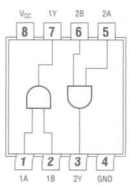

See page 39

2G14
DUAL SCHMITT-TRIGGER INVERTER

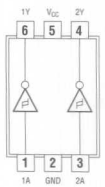

See page 39

2G17
DUAL SCHMITT-TRIGGER BUFFER

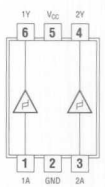

See page 40

2G32
DUAL 2-INPUT POSITIVE-OR GATE

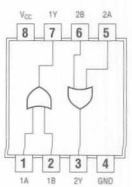

See page 40

2G34
DUAL BUFFER GATE

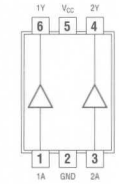

See page 41

2G74
SINGLE POSITIVE-EDGE-TRIGGERED D-TYPE FLIP-FLOP WITH CLEAR AND PRESET

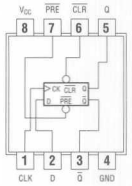

See page 42

2G53
DUAL ANALOG MULTIPLEXER/DEMULTIPLEXER

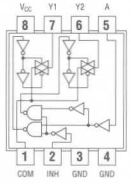

See page 41

2G86
DUAL 2-INPUT EXCLUSIVE-OR GATE

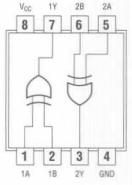

See page 43

2G66
DUAL BILATERAL ANALOG SWITCH

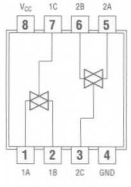

See page 42

2G125
DUAL BUS BUFFER GATE WITH 3-STATE OUTPUTS

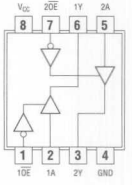

See page 43

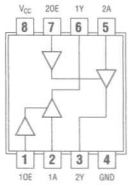

See page 44

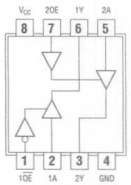

See page 45

2G157

SINGLE 2-LINE TO 1-LINE DATA SELECTOR/MULTIPLEXER

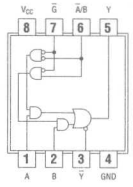

See page 44

3G04

TRIPLE INVERTER GATE

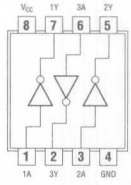

See page 46

2G240

DUAL BUFFERS/DRIVERS WITH 3-STATE OUTPUTS

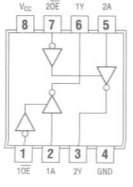

See page 45

3G06

TRIPLE INVERTER BUFFER/DRIVER WITH OPEN-DRAIN OUTPUTS

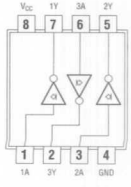

See page 46

3G07
TRIPLE BUFFER/DRIVER WITH OPEN-DRAIN OUTPUTS

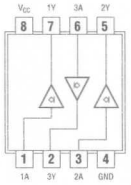

See page 47

3G34
TRIPLE BUFFER GATE

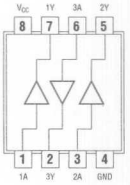

See page 48

3G14
TRIPLE SCHMITT-TRIGGER INVERTER

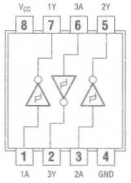

See page 47

3G17
TRIPLE SCHMITT-TRIGGER BUFFER

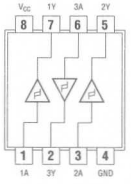

See page 48

Pin Assignments

3G07
TRIPLE BUFFER/DRIVER
WITH OPEN-DRAIN OUTPUTS

3G34
TRIPLE BUFFER GATE

3G14
TRIPLE SCHMITT-TRIGGER INVERTER

3G17
TRIPLE SCHMITT-TRIGGER BUFFER

FUNCTION
AND
ELECTRICAL
CHARACTERISTICS

1G / 2G / 3G

FUNCTION AND ELECTRICAL CHARACTERISTICS

1G / 2G / 3G

1G00

SINGLE 2-INPUT POSITIVE-NAND GATE

● $Y = \overline{AB}$

Logic Diagram

FUNCTION TABLE

INPUT A	INPUT B	OUTPUT Y
H	H	L
L	X	H
X	L	H

RECOMMENDED OPERATING CONDITIONS

PARAMETER	MAX or MIN	AHC	AHCT	LVC 5V	LVC 3.3V	LVC 2.5V	LVC 1.8V	AUC 2.5V	AUC 1.8V	UNIT
I_{CC}	MAX	0.01	0.01	0.01	0.01	0.01	0.01	0.01	0.01	mA
I_{OH}	MAX	-8	-8	-32	-24	-8	-4	-9	-8	mA
I_{OL}	MAX	8	8	32	24	8	4	9	8	mA

SWITCHING CHARACTERISTICS

PARAMETER	INPUT	OUTPUT	MAX or MIN	AHC	AHCT	LVC 5V	LVC 3.3V	LVC 2.5V	LVC 1.8V	AUC 2.5V	AUC 1.8V
t_{PLH}	A or B	Y	MAX	8.5	9	4	4.7	5.5	8	2	2.2
t_{PHL}				8.5	9	4	4.7	5.5	8	2	2.2

UNIT:ns

1G02

SINGLE 2-INPUT POSITIVE-NOR GATE

● $Y = \overline{A + B}$

Logic Diagram (positive logic)

FUNCTION TABLE

INPUT A	INPUT B	OUTPUT Y
H	X	L
X	H	L
L	L	H

RECOMMENDED OPERATING CONDITIONS

PARAMETER	MAX or MIN	AHC	AHCT	LVC 5V	LVC 3.3V	LVC 2.5V	LVC 1.8V	AUC 2.5V	AUC 1.8V	UNIT
I_{CC}	MAX	0.01	0.01	0.01	0.01	0.01	0.01	0.01	0.01	mA
I_{OH}	MAX	-8	-8	-32	-24	-8	-4	-9	-8	mA
I_{OL}	MAX	8	8	32	24	8	4	9	8	mA

SWITCHING CHARACTERISTICS

PARAMETER	INPUT	OUTPUT	MAX or MIN	AHC	AHCT	LVC 5V	LVC 3.3V	LVC 2.5V	LVC 1.8V	AUC 2.5V	AUC 1.8V
t_{PLH}	A or B	Y	MAX	8.5	8.5	4	4.5	5.5	8	2.1	2.4
t_{PHL}				8.5	8.5	4	4.5	5.5	8	2.1	2.4

UNIT:ns

1G04

SINGLE INVERTER GATE

Logic Diagram

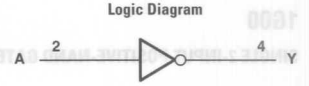

● $Y = \overline{A}$

FUNCTION TABLE

INPUT A	OUTPUT Y
H	L
L	H

RECOMMENDED OPERATING CONDITIONS

PARAMETER	MAX or MIN	AHC	AHCT	LVC 5V	LVC 3.3V	LVC 2.5V	LVC 1.8V	AUC 2.5V	AUC 1.8V	UNIT
I_{CC}	MAX	0.01	0.01	0.01	0.01	0.01	0.01	0.01	0.01	mA
I_{OH}	MAX	-8	-8	-32	-24	-8	-4	-9	-8	mA
I_{OL}	MAX	8	8	32	24	8	4	9	8	mA

SWITCHING CHARACTERISTICS

PARAMETER	INPUT	OUTPUT	MAX or MIN	AHC	AHCT	LVC 5V	LVC 3.3V	LVC 2.5V	LVC 1.8V	AUC 2.5V	AUC 1.8V
t_{PLH}	A	Y	MAX	8.5	8.5	3.7	4.2	5.2	7.5	1.9	2.2
t_{PHL}				8.5	8.5	3.7	4.2	5.2	7.5	1.9	2.2

UNIT:ns

1GU04

SINGLE INVERTER

Logic Diagram

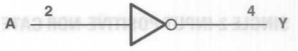

● $Y = \overline{A}$

● Unbuffered Output

● Supply Voltage Renge : 2V ~ 5.5V

FUNCTION TABLE

INPUT A	OUTPUT Y
H	L
L	H

RECOMMENDED OPERATING CONDITIONS

PARAMETER	MAX or MIN	AHC	LVC 5V	LVC 3.3V	LVC 2.5V	LVC 1.8V	AUC 2.5V	AUC 1.8V	UNIT
I_{CC}	MAX	0.01	0.01	0.01	0.01	0.01	0.01	0.01	mA
I_{OH}	MAX	-8	-32	-24	-8	-4	-9	-8	mA
I_{OL}	MAX	8	32	24	8	4	9	8	mA

SWITCHING CHARACTERISTICS

PARAMETER	INPUT	OUTPUT	MAX or MIN	AHC	LVC 5V	LVC 3.3V	LVC 2.5V	LVC 1.8V	AUC 2.5V	AUC 1.8V
t_{PLH}	A	Y	MAX	8	3	3.7	4	5	2.1	2.4
t_{PHL}				8	3	3.7	4	5	2.1	2.4

UNIT:ns

1G06

SINGLE INVERTER BUFFER/DRIVER WITH OPEN-DRAIN OUTPUT

Logic Diagram

FUNCTION TABLE

INPUT A	OUTPUT Y
H	L
L	H

RECOMMENDED OPERATING CONDITIONS

PARAMETER	MAX or MIN	LVC 5V	LVC 3.3V	LVC 2.5V	LVC 1.8V	AUC 2.5V	AUC 1.8V	UNIT
I_{CC}	MAX	0.01	0.01	0.01	0.01	0.01	0.01	mA
V_O	MAX	5.5	5.5	5.5	5.5	2.7	2.7	V
I_{OL}	MAX	32	24	8	4	9	8	mA

SWITCHING CHARACTERISTICS

PARAMETER	INPUT	OUTPUT	MAX or MIN	LVC 5V	LVC 3.3V	LVC 2.5V	LVC 1.8V	AUC 2.5V	AUC 1.8V
t_{PLH}	A	Y	MAX	3	4	4	5.6	1.8	2.5
t_{PHL}				3	4	4	5.6	1.8	2.5

UNIT:ns

1G07

SINGLE BUFFER/DRIVER WITH OPEN-DRAIN OUTPUT

Logic Diagram

FUNCTION TABLE

INPUT A	OUTPUT Y
H	H
L	L

RECOMMENDED OPERATING CONDITIONS

PARAMETER	MAX or MIN	LVC 5V	LVC 3.3V	LVC 2.5V	LVC 1.8V	AUC 2.5V	AUC 1.8V	UNIT
I_{CC}	MAX	0.01	0.01	0.01	0.01	0.01	0.01	mA
I_{OH}	MAX	5.5	5.5	5.5	5.5	2.7	2.7	V
I_{OL}	MAX	32	24	8	4	9	8	mA

SWITCHING CHARACTERISTICS

PARAMETER	INPUT	OUTPUT	MAX or MIN	LVC 5V	LVC 3.3V	LVC 2.5V	LVC 1.8V	AUC 2.5V	AUC 1.8V
t_{PLH}	A	Y	MAX	3.5	4.2	5.5	8.3	1.8	2.5
t_{PHL}				3.5	4.2	5.5	8.3	1.8	2.5

UNIT:ns

PRODUCTION DATA information is current as of publication date. Products conform to specifications per the terms of Texas Instruments standard warranty. Production processing does not necessarily include testing of all parameters. See www.ti.com/sc/logic for the most current data sheets.

1G08

SINGLE 2-INPUT POSITIVE-AND GATE

● Y = AB

Logic Diagram

FUNCTION TABLE

INPUT		OUTPUT
A	B	Y
H	H	H
L	X	L
X	L	L

RECOMMENDED OPERATING CONDITIONS

PARAMETER	MAX or MIN	AHC	AHCT	LVC 5V	LVC 3.3V	LVC 2.5V	LVC 1.8V	AUC 2.5V	AUC 1.8V	UNIT
I_{CC}	MAX	0.01	0.01	0.01	0.01	0.01	0.01	0.01	0.01	mA
I_{OH}	MAX	-8	-8	-32	-24	-8	-4	-9	-8	mA
I_{OL}	MAX	8	8	32	24	8	4	9	8	mA

SWITCHING CHARACTERISTICS

PARAMETER	INPUT	OUTPUT	MAX or MIN	AHC	AHCT	LVC 5V	LVC 3.3V	LVC 2.5V	LVC 1.8V	AUC 2.5V	AUC 1.8V
t_{PLH}	A or B	Y	MAX	9	9	4	4.5	5.5	8	2	2.4
t_{PHL}				9	9	4	4.5	5.5	8	2	2.4

UNIT:ns

1G14

SINGLE SCHMITT-TRIGGER INVERTER GATE

● $Y = \overline{A}$

Logic Diagram

FUNCTION TABLE

INPUT A	OUTPUT Y
H	L
L	H

RECOMMENDED OPERATING CONDITIONS

PARAMETER	MAX or MIN	AHC	AHCT	LVC 5V	LVC 3.3V	LVC 2.5V	LVC 1.8V	AUC 2.5V	AUC 1.8V	UNIT
I_{CC}	MAX	0.01	0.01	0.01	0.01	0.01	0.01	0.01	0.01	mA
I_{OH}	MAX	-8	-8	-32	-24	-8	-4	-9	-8	mA
I_{OL}	MAX	8	8	32	24	8	4	9	8	mA

SWITCHING CHARACTERISTICS

PARAMETER	INPUT	OUTPUT	MAX or MIN	AHC	AHCT	LVC 5V	LVC 3.3V	LVC 2.5V	LVC 1.8V	AUC 2.5V	AUC 1.8V
t_{PLH}	A	Y	MAX	12	9	5	5.5	6.5	11	2.5	2.5
t_{PHL}				12	9	5	5.5	6.5	11	2.5	2.5

UNIT:ns

1G17

SINGLE SCHMITT-TRIGGER BUFFER

Logic Diagram

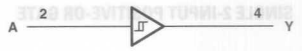

RECOMMENDED OPERATING CONDITIONS

PARAMETER	MAX or MIN	LVC 5V	LVC 3.3V	LVC 2.5V	LVC 1.8V	AUC 2.5V	AUC 1.8V	UNIT
I_{CC}	MAX	0.01	0.01	0.01	0.01	0.01	0.01	mA
I_{OH}	MAX	-32	-24	-8	-4	-9	-8	mA
I_{OL}	MAX	32	24	8	4	9	8	mA

FUNCTION TABLE

INPUT A	OUTPUT Y
H	H
L	L

SWITCHING CHARACTERISTICS

PARAMETER	INPUT	OUTPUT	MAX or MIN	LVC 5V	LVC 3.3V	LVC 2.5V	LVC 1.8V	AUC 2.5V	AUC 1.8V
t_{PLH}	A	Y	MAX	5	5.5	6.5	11	2.5	2.4
t_{PHL}				5	5.5	6.5	11	2.5	2.4

UNIT:ns

1G18

1-OF-2 NONINVERTING DEMULTIPLEXER WITH 3-STATE DESELECTED OUTPUT

Logic Diagram

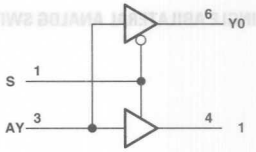

RECOMMENDED OPERATING CONDITIONS

PARAMETER	MAX or MIN	LVC 5V	LVC 3.3V	LVC 2.5V	LVC 1.8V	UNIT
I_{CC}	MAX	0.01	0.01	0.01	0.01	mA
I_{OH}	MAX	-32	-24	-8	-4	mA
I_{OL}	MAX	32	24	8	4	mA

FUNCTION TABLE

INPUTS S	INPUTS A	OUTPUT Y0	OUTPUT Y1
L	L	L	Z
L	H	H	Z
H	L	Z	L
H	H	Z	H

SWITCHING CHARACTERISTICS

PARAMETER	INPUT	OUTPUT	MAX or MIN	LVC 5V	LVC 3.3V	LVC 2.5V	LVC 1.8V
t_{PLH}	A	Y	MAX	3.2	4.2	5	9.3
t_{PHL}				3.2	4.2	5	9.3
t_{PZL}	S	Y	MAX	3.4	4.6	5.6	10.2
t_{PZH}				3.4	4.6	5.6	10.2
t_{PLZ}	S	Y	MAX	3.3	4.9	5.3	12.7
t_{PHZ}				3.3	4.9	5.3	12.7

UNIT:ns

PRODUCTION DATA information is current as of publication date. Products conform to specifications per the terms of Texas Instruments standard warranty. Production processing does not necessarily include testing of all parameters. See www.ti.com/sc/logic for the most current data sheets.

1G32

SINGLE 2-INPUT POSITIVE-OR GATE

● Y = A + B

Logic Diagram

FUNCTION TABLE

INPUT		OUTPUT
A	B	Y
H	X	H
X	H	H
L	L	L

RECOMMENDED OPERATING CONDITIONS

PARAMETER	MAX or MIN	AHC	AHCT	LVC 5V	LVC 3.3V	LVC 2.5V	LVC 1.8V	AUC 2.5V	AUC 1.8V	UNIT
I_{CC}	MAX	0.01	0.01	0.01	0.01	0.01	0.01	0.01	0.01	mA
I_{OH}	MAX	-8	-8	-32	-24	-8	-4	-9	-8	mA
I_{OL}	MAX	8	8	32	24	8	4	9	8	mA

SWITCHING CHARACTERISTICS

PARAMETER	INPUT	OUTPUT	MAX or MIN	AHC	AHCT	LVC 5V	LVC 3.3V	LVC 2.5V	LVC 1.8V	AUC 2.5V	AUC 1.8V
t_{PLH}	A or B	Y	MAX	8.5	9	4	4.5	5.5	8	2.1	2.4
t_{PHL}				8.5	9	4	4.5	5.5	8	2.1	2.4

UNIT:ns

1G66

SINGLE ABILATERAL ANALOG SWITCH

Logic Diagram

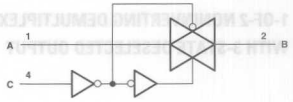

FUNCTION TABLE

CONTROL INPUT (C)	SWITCH
L	OFF
H	ON

RECOMMENDED OPERATING CONDITIONS

PARAMETER	MAX or MIN	LVC	AUC 1.8V	UNIT
I_{CC}	MAX	0.01	0.01	mA

SWITCHING CHARACTERISTICS

PARAMETER	INPUT	OUTPUT	MAX or MIN	LVC 5V	LVC 3.3V	LVC 2.5V	LVC 1.8V	AUC 2.5V	AUC 1.8V
t_{PLH}	A or B	B or A	MAX	0.6	0.8	1.2	2	0.1	0.2
t_{PHL}				0.6	0.8	1.2	2	0.1	0.2
t_{PZH}	C	B or A	MAX	4.2	5	6.5	12	1	1.1
t_{PZL}				4.2	5	6.5	12	1	1.1
t_{PHZ}	C	B or A	MAX	5	6.5	6.9	10	2.2	2.9
t_{PLZ}				5	6.5	6.9	10	2.2	2.9

UNIT:ns

1G79

SINGLE POSITIVE-EDGE-TRIGGERED D-TYPE FLIP-FLOP

Logic Diagram

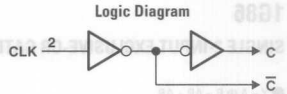

FUNCTION TABLE

INPUT		OUTPUT
CLK	D	Q
↑	H	H
↑	L	L
L	X	Q_0

RECOMMENDED OPERATING CONDITIONS

PARAMETER	MAX or MIN	LVC 5V	LVC 3.3V	LVC 2.5V	LVC 1.8V	UNIT
I_{CC}	MAX	0.01	0.01	0.01	0.01	mA
I_{OH}	MAX	-32	-24	-8	-4	mA
I_{OL}	MAX	32	24	8	4	mA

SWITCHING CHARACTERISTICS

PARAMETER	INPUT	OUTPUT	MAX or MIN	LVC 5V	LVC 3.3V	LVC 2.5V	LVC 1.8V
fmax			MIN	160	160	160	160
tw	CLK high or low		MIN	2.5	2.5	2.5	2.5
tsu	Before CLK ↑, Data high		MIN	1.2	1.3	1.4	2.2
	Before CLK ↑, Data low			1.2	1.3	1.4	2.6
th	Data after CLK ↑		MIN	0.5	1.0	0.4	0.3
t_{PLH}	CLK	Q	MAX	4.5	5.2	7	9.9
t_{PHL}				4.5	5.2	7	9.9

UNIT fmax : MHz other : ns

1G80

SINGLE POSITIVE-EDGE-TRIGGERED D-TYPE FLIP-FLOP

Logic Diagram

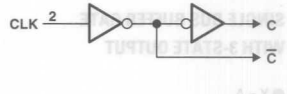

FUNCTION TABLE

INPUT		OUTPUT
CLK	D	$\overline{Q}$
↑	H	L
↑	L	H
L	X	Q_0

RECOMMENDED OPERATING CONDITIONS

PARAMETER	MAX or MIN	LVC 5V	LVC 3.3V	LVC 2.5V	LVC 1.8V	UNIT
I_{CC}	MAX	0.01	0.01	0.01	0.01	mA
I_{OH}	MAX	-32	-24	-8	-4	mA
I_{OL}	MAX	32	24	8	4	mA

SWITCHING CHARACTERISTICS

PARAMETER	INPUT	OUTPUT	MAX or MIN	LVC 5V	LVC 3.3V	LVC 2.5V	LVC 1.8V
fmax			MIN	160	160	160	160
tw	CLK high or low		MIN	2.5	2.5	2.5	2.5
tsu	Before CLK ↑, Data high		MIN	1.1	1.3	1.5	2.3
	Before CLK ↑, Data low			1.1	1.3	1.5	2.5
th	Data after CLK ↑		MIN	0.4	0.9	0.2	0
t_{PLH}	CLK	$\overline{Q}$	MAX	4.5	5.2	7	9.9
t_{PHL}				4.5	5.2	7	9.9

UNIT fmax : MHz other : ns

PRODUCTION DATA information is current as of publication date. Products conform to specifications per the terms of Texas Instruments standard warranty. Production processing does not necessarily include testing of all parameters. See www.ti.com/sc/logic for the most current data sheets.

An exclusive-OR gate has many applications, some of which can be represented better by alternative logic symbols.

RECOMMENDED OPERATING CONDITIONS

PARAMETER	MAX or MIN	AHC	AHCT	LVC 5V	LVC 3.3V	LVC 2.5V	LVC 1.8V	UNIT
I_{CC}	MAX	0.01	0.01	0.01	0.01	0.01	0.01	mA
I_{OH}	MAX	-8	-8	-32	-24	-8	-4	mA
I_{OL}	MAX	8	8	32	24	8	4	mA

FUNCTION TABLE

INPUT		OUTPUT
A	B	Y
L	L	L
L	H	H
H	L	H
H	H	L

SWITCHING CHARACTERISTICS

PARAMETER	INPUT	OUTPUT	MAX or MIN	AHC	AHCT	LVC 5V	LVC 3.3V	LVC 2.5V	LVC 1.8V
t_{PLH}	A or B	Y	MAX	10	9	4	5	5.5	9.9
t_{PHL}				10	9	4	5	5.5	9.9

UNIT:ns

1G125

SINGLE BUS BUFFER GATE WITH 3-STATE OUTPUT

● Y = A

Logic Diagram

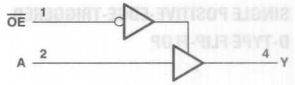

FUNCTION TABLE

INPUT		OUTPUT
$\overline{OE}$	A	Y
L	H	H
L	L	L
H	X	Z

RECOMMENDED OPERATING CONDITIONS

PARAMETER	MAX or MIN	AHC	AHCT	LVC 5V	LVC 3.3V	LVC 2.5V	LVC 1.8V	AUC 2.5V	AUC 1.8V	UNIT
I_{CC}	MAX	0.01	0.01	0.01	0.01	0.01	0.01	0.01	0.01	mA
I_{OH}	MAX	-8	-8	-32	-24	-8	-4	-9	-8	mA
I_{OL}	MAX	8	8	32	24	8	4	9	8	mA

SWITCHING CHARACTERISTICS

PARAMETER	INPUT	OUTPUT	MAX or MIN	AHC	AHCT	LVC 5V	LVC 3.3V	LVC 2.5V	LVC 1.8V	AUC 2.5V	AUC 1.8V
t_{PLH}	A	Y	MAX	8.5	8.5	4	4.5	5.5	8	1.7	2.5
t_{PHL}				8.5	8.5	4	4.5	5.5	8	1.7	2.5
t_{PZH}	$\overline{OE}$	Y	MAX	8	8	5	5.3	6.5	9.4	1.9	2.6
t_{PZL}				8	8	5	5.3	6.5	9.4	1.9	2.6
t_{PHZ}	$\overline{OE}$	Y	MAX	10	10	4.2	5	5	9.2	1.7	3.1
t_{PLZ}				10	10	4.2	5	5	9.2	1.7	3.1

UNIT:ns

1G126

Logic Diagram

FUNCTION TABLE

INPUT		OUTPUT
$\overline{OE}$	A	Y
H	H	H
H	L	L
L	X	Z

RECOMMENDED OPERATING CONDITIONS

PARAMETER	MAX or MIN	AHC	AHCT	LVC 5V	LVC 3.3V	LVC 2.5V	LVC 1.8V	AUC 2.5V	AUC 1.8V	UNIT
I_{CC}	MAX	0.01	0.01	0.01	0.01	0.01	0.01	0.01	0.01	mA
I_{OH}	MAX	-8	-8	-32	-24	-8	-4	-9	-8	mA
I_{OL}	MAX	8	8	32	24	8	4	9	8	mA

SWITCHING CHARACTERISTICS

PARAMETER	INPUT	OUTPUT	MAX or MIN	AHC	AHCT	LVC 5V	LVC 3.3V	LVC 2.5V	LVC 1.8V	AUC 2.5V	AUC 1.8V
t_{PLH}	A	Y	MAX	8.5	8.5	4	4.5	5.5	8	1.7	2.5
t_{PHL}				8.5	8.5	4	4.5	5.5	8	1.7	2.5
t_{PZH}	OE	Y	MAX	8	8	5	5.3	6.6	9.4	1.9	2.5
t_{PZL}				8	8	5	5.3	6.6	9.4	1.9	2.5
t_{PHZ}	OE	Y	MAX	10	10	4.2	5.5	5.5	9.8	1.7	3.1
t_{PLZ}				10	10	4.2	5.5	5.5	9.8	1.7	3.1

UNIT:ns

1G240

SINGLE BUFFER/DRIVER
WITH 3-STATE OUTPUT

Logic Diagram

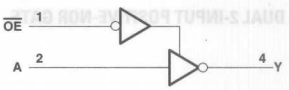

FUNCTION TABLE

INPUT		OUTPUT
$\overline{OE}$	A	Y
L	H	L
L	L	H
H	X	Z

RECOMMENDED OPERATING CONDITIONS

PARAMETER	MAX or MIN	LVC 5V	LVC 3.3V	LVC 2.5V	LVC 1.8V	AUC 2.5V	AUC 1.8V	UNIT
I_{CC}	MAX	0.01	0.01	0.01	0.01	0.01	0.01	mA
I_{OH}	MAX	-32	-24	-8	-4	-9	-8	mA
I_{OL}	MAX	32	24	8	4	9	8	mA

SWITCHING CHARACTERISTICS

PARAMETER	INPUT	OUTPUT	MAX or MIN	LVC 5V	LVC 3.3V	LVC 2.5V	LVC 1.8V	AUC 2.5V	AUC 1.8V
t_{PLH}	A	Y	MAX	4	4.5	5.5	8	1.7	2.5
t_{PHL}				4	4.5	5.5	8	1.7	2.5
t_{PZH}	$\overline{OE}$	Y	MAX	5.2	5.4	6.5	9.4	1.9	2.6
t_{PZL}				5.2	5.4	6.5	9.4	1.9	2.6
t_{PHZ}	$\overline{OE}$	Y	MAX	4.1	5.2	4.9	9.4	1.7	3.1
t_{PLZ}				4.1	5.2	4.9	9.4	1.7	3.1

UNIT:ns

2G00

DUAL 2-INPUT POSITIVE-NAND GATE

Logic Diagram

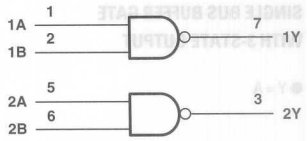

RECOMMENDED OPERATING CONDITIONS

PARAMETER	MAX or MIN	LVC 5V	LVC 3.3V	LVC 2.5V	LVC 1.8V	UNIT
I_{CC}	MAX	0.01	0.01	0.01	0.01	mA
I_{OH}	MAX	-32	-24	-8	-4	mA
I_{OL}	MAX	32	24	8	4	mA

FUNCTION TABLE
(each gate)

INPUT A	INPUT B	OUTPUT Y
H	H	L
L	X	H
X	L	H

SWITCHING CHARACTERISTICS

PARAMETER	INPUT	OUTPUT	MAX or MIN	LVC 5V	LVC 3.3V	LVC 2.5V	LVC 1.8V
t_{PLH}	A or B	Y	MAX	3.3	4.3	4.8	8.6
t_{PHL}				3.3	4.3	4.8	8.6

UNIT:ns

2G02

DUAL 2-INPUT POSITIVE-NOR GATE

Logic Diagram

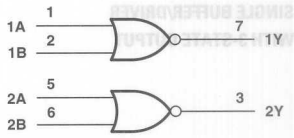

RECOMMENDED OPERATING CONDITIONS

PARAMETER	MAX or MIN	LVC 5V	LVC 3.3V	LVC 2.5V	LVC 1.8V	UNIT
I_{CC}	MAX	0.01	0.01	0.01	0.01	mA
I_{OH}	MAX	-32	-24	-8	-4	mA
I_{OL}	MAX	32	24	8	4	mA

FUNCTION TABLE
(each gate)

INPUT A	INPUT B	OUTPUT Y
H	X	L
X	H	L
L	L	H

SWITCHING CHARACTERISTICS

PARAMETER	INPUT	OUTPUT	MAX or MIN	LVC 5V	LVC 3.3V	LVC 2.5V	LVC 1.8V
t_{PLH}	A or B	Y	MAX	4.4	4.9	5.4	8.9
t_{PHL}				4.4	4.9	5.4	8.9

UNIT:ns

2G04

DUAL INVERTER GATE

Logic Diagram

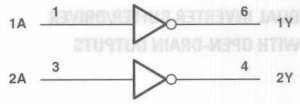

FUNCTION TABLE
(each inverter)

INPUT A	OUTPUT Y
H	L
L	H

RECOMMENDED OPERATING CONDITIONS

PARAMETER	MAX or MIN	LVC 5V	LVC 3.3V	LVC 2.5V	LVC 1.8V	UNIT
I_{CC}	MAX	0.01	0.01	0.01	0.01	mA
I_{OH}	MAX	-32	-24	-8	-4	mA
I_{OL}	MAX	32	24	8	4	mA

SWITCHING CHARACTERISTICS

PARAMETER	INPUT	OUTPUT	MAX or MIN	LVC 5V	LVC 3.3V	LVC 2.5V	LVC 1.8V
t_{PLH}	A	Y	MAX	3.2	4.1	4.4	8
t_{PHL}				3.2	4.1	4.4	8

UNIT:ns

2GU04

DUAL INVERTER GATE

Logic Diagram

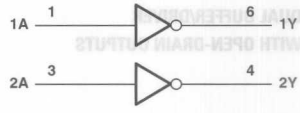

FUNCTION TABLE
(each inverter)

INPUT A	OUTPUT Y
H	L
L	H

RECOMMENDED OPERATING CONDITIONS

PARAMETER	MAX or MIN	LVC 5V	LVC 3.3V	LVC 2.5V	LVC 1.8V	UNIT
I_{CC}	MAX	0.01	0.01	0.01	0.01	mA
I_{OH}	MAX	-32	-24	-8	-4	mA
I_{OL}	MAX	32	24	8	4	mA

SWITCHING CHARACTERISTICS

PARAMETER	INPUT	OUTPUT	MAX or MIN	LVC 5V	LVC 3.3V	LVC 2.5V	LVC 1.8V
t_{PLH}	A	Y	MAX	3	3.7	4	5.5
t_{PHL}				3	3.7	4	5.5

UNIT:ns

2G06

RECOMMENDED OPERATING CONDITIONS

PARAMETER	MAX or MIN	LVC 5V	LVC 3.3V	LVC 2.5V	LVC 1.8V	UNIT
I_{CC}	MAX	0.01	0.01	0.01	0.01	mA
V_O	MAX	5.5	5.5	5.5	5.5	V
I_{OL}	MAX	32	24	8	4	mA

FUNCTION TABLE
(each inverter)

INPUT A	OUTPUT Y
H	L
L	H

SWITCHING CHARACTERISTICS

PARAMETER	INPUT	OUTPUT	MAX or MIN	LVC 5V	LVC 3.3V	LVC 2.5V	LVC 1.8V
t_{PLH}	A	Y	MAX	2.9	3.4	3.9	7.2
t_{PHL}				2.9	3.4	3.9	7.2

UNIT:ns

2G07

DUAL BUFFER/DRIVER
WITH OPEN-DRAIN OUTPUTS

Logic Diagram

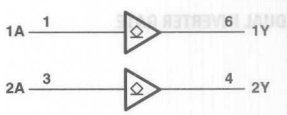

FUNCTION TABLE
(each buffer/deiver)

INPUT A	OUTPUT Y
H	H
L	L

RECOMMENDED OPERATING CONDITIONS

PARAMETER	MAX or MIN	LVC 5V	LVC 3.3V	LVC 2.5V	LVC 1.8V	UNIT
I_{CC}	MAX	0.01	0.01	0.01	0.01	mA
V_O	MAX	5.5	5.5	5.5	5.5	V
I_{OL}	MAX	32	24	8	4	mA

SWITCHING CHARACTERISTICS

PARAMETER	INPUT	OUTPUT	MAX or MIN	LVC 5V	LVC 3.3V	LVC 2.5V	LVC 1.8V
t_{PLH}	A	Y	MAX	2.9	3.7	4.4	8.6
t_{PHL}				2.9	3.7	4.4	8.6

UNIT:ns

2G08

DUAL 2-INPUT POSITIVE-AND GATE

Logic Diagram

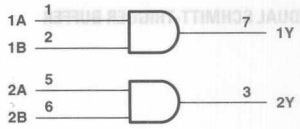

RECOMMENDED OPERATING CONDITIONS

PARAMETER	MAX or MIN	LVC 5V	LVC 3.3V	LVC 2.5V	LVC 1.8V	UNIT
I_{CC}	MAX	0.01	0.01	0.01	0.01	mA
I_{OH}	MAX	-32	-24	-8	-4	mA
I_{OL}	MAX	32	24	8	4	mA

FUNCTION TABLE
(each gate)

INPUT A	INPUT B	OUTPUT Y
H	H	H
L	X	L
X	L	L

SWITCHING CHARACTERISTICS

PARAMETER	INPUT	OUTPUT	MAX or MIN	LVC 5V	LVC 3.3V	LVC 2.5V	LVC 1.8V
t_{PLH}	A or B	Y	MAX	3.8	4.7	5.1	9
t_{PHL}				3.8	4.7	5.1	9

UNIT:ns

2G14

DUAL SCHMITT-TRIGGER INVERTER

Logic Diagram

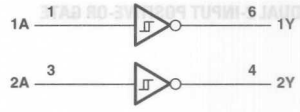

FUNCTION TABLE
(each inverter)

INPUT A	OUTPUT Y
H	L
L	H

RECOMMENDED OPERATING CONDITIONS

PARAMETER	MAX or MIN	LVC 5V	LVC 3.3V	LVC 2.5V	LVC 1.8V	UNIT
I_{CC}	MAX	0.01	0.01	0.01	0.01	mA
I_{OH}	MAX	-32	-24	-8	-4	mA
I_{OL}	MAX	32	24	8	4	mA

SWITCHING CHARACTERISTICS

PARAMETER	INPUT	OUTPUT	MAX or MIN	LVC 5V	LVC 3.3V	LVC 2.5V	LVC 1.8V
t_{PLH}	A	Y	MAX	4.3	5.4	5.7	9.5
t_{PHL}				4.3	5.4	5.7	9.5

UNIT:ns

PRODUCTION DATA information is current as of publication date. Products conform to specifications per the terms of Texas Instruments standard warranty. Production processing does not necessarily include testing of all parameters. See www.ti.com/sc/logic for the most current data sheets.

2G17

DUAL SCHMITT-TRIGGER BUFFER

Logic Diagram

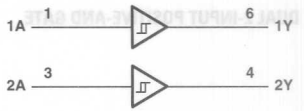

RECOMMENDED OPERATING CONDITIONS

PARAMETER	MAX or MIN	LVC 5V	LVC 3.3V	LVC 2.5V	LVC 1.8V	UNIT
I_{CC}	MAX	0.01	0.01	0.01	0.01	mA
I_{OH}	MAX	-32	-24	-8	-4	mA
I_{OL}	MAX	32	24	8	4	mA

FUNCTION TABLE
(each inverter)

INPUT A	OUTPUT Y
H	H
L	L

SWITCHING CHARACTERISTICS

PARAMETER	INPUT	OUTPUT	MAX or MIN	LVC 5V	LVC 3.3V	LVC 2.5V	LVC 1.8V
t_{PLH}	A	Y	MAX	4.3	5.4	5.7	9.3
t_{PHL}				4.3	5.4	5.7	9.3

UNIT:ns

2G32

DUAL 2-INPUT POSITIVE-OR GATE

Logic Diagram

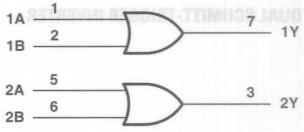

RECOMMENDED OPERATING CONDITIONS

PARAMETER	MAX or MIN	LVC 5V	LVC 3.3V	LVC 2.5V	LVC 1.8V	UNIT
I_{CC}	MAX	0.01	0.01	0.01	0.01	mA
I_{OH}	MAX	-32	-24	-8	-4	mA
I_{OL}	MAX	32	24	8	4	mA

FUNCTION TABLE
(each gate)

INPUT A	INPUT B	OUTPUT Y
H	X	H
X	H	H
L	L	L

SWITCHING CHARACTERISTICS

PARAMETER	INPUT	OUTPUT	MAX or MIN	LVC 5V	LVC 3.3V	LVC 2.5V	LVC 1.8V
t_{PLH}	A or B	Y	MAX	3.2	3.8	4.4	8
t_{PHL}				3.2	3.8	4.4	8

UNIT:ns

2G34

DUAL BUFFER GATE

Logic Diagram

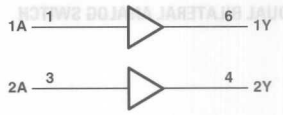

FUNCTION TABLE
(each gate)

INPUT A	OUTPUT Y
H	H
L	L

RECOMMENDED OPERATING CONDITIONS

PARAMETER	MAX or MIN	LVC 5V	LVC 3.3V	LVC 2.5V	LVC 1.8V	UNIT
I_{CC}	MAX	0.01	0.01	0.01	0.01	mA
I_{OH}	MAX	-32	-24	-8	-4	mA
I_{OL}	MAX	32	24	8	4	mA

SWITCHING CHARACTERISTICS

PARAMETER	INPUT	OUTPUT	MAX or MIN	LVC 5V	LVC 3.3V	LVC 2.5V	LVC 1.8V
t_{PLH}	A	Y	MAX	3.2	4.1	4.4	8.6
t_{PHL}				3.2	4.1	4.4	8.6

UNIT:ns

2G53

DUAL ANALOG MULTIPLEXER/DEMULTIPLEXER

Logic Diagram

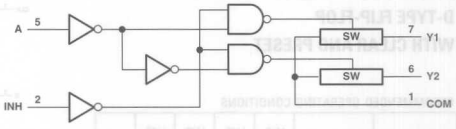

FUNCTION TABLE

CONTROL INPUT INH	A	ON CHANNEL
L	L	Y1
L	H	Y2
H	X	None

RECOMMENDED OPERATING CONDITIONS

PARAMETER	MAX or MIN	LVC 5V	UNIT
I_{CC}	MAX	0.01	mA

SWITCHING CHARACTERISTICS

PARAMETER	INPUT	OUTPUT	MAX or MIN	LVC 5V	LVC 3.3V	LVC 2.5V	LVC 1.8V
t_{PLH}	COM or Y	Y or COM	MAX	0.6	0.8	1.2	2
t_{PHL}				0.6	0.8	1.2	2
t_{PZH}	INH	COM or Y	MAX	4.5	5.4	6.1	9
t_{PZL}				4.5	5.4	6.1	9
t_{PHZ}				8	8.1	8.3	10.9
t_{PLZ}				8	8.1	8.3	10.9
t_{PZH}	A	COM or Y	MAX	5.4	5.8	7.2	10.3
t_{PZL}				5.4	5.8	7.2	10.3
t_{PHZ}				5	7.2	7.9	9.4
t_{PLZ}				5	7.2	7.9	9.4

UNIT:ns

2G66

DUAL BILATERAL ANALOG SWITCH

Logic Diagram, each switch

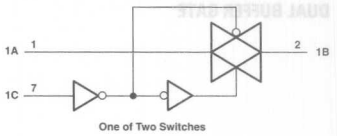

One of Two Switches

RECOMMENDED OPERATING CONDITIONS

PARAMETER	MAX or MIN	LVC	UNIT
I_{CC}	MAX	0.01	mA

FUNCTION TABLE
(each section)

CONTROL INPUT (C)	SWITCHI
L	OFF
H	ON

SWITCHING CHARACTERISTICS

PARAMETER	INPUT	OUTPUT	MAX or MIN	LVC 5V	LVC 3.3V	LVC 2.5V	LVC 1.8V
t_{PLH}	A or B	B or A	MAX	0.6	0.8	1.2	2
t_{PHL}				0.6	0.8	1.2	2
t_{PZH}	C	A or B	MAX	3.9	4.4	5.6	10
t_{PZL}				3.9	4.4	5.6	10
t_{PHZ}	C	A or B	MAX	6.3	7.2	6.9	10.5
t_{PLZ}				6.3	7.2	6.9	10.5

UNIT:ns

2G74

SINGLE POSITIVE-EDGE-TRIGGERED D-TYPE FLIP-FLOP WITH CLEAR AND PRESET

Logic Diagram

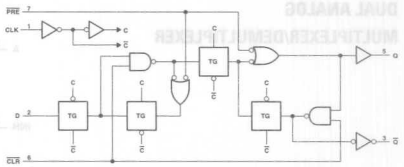

RECOMMENDED OPERATING CONDITIONS

PARAMETER	MAX or MIN	LVC 5V	LVC 3.3V	LVC 2.5V	LVC 1.8V	UNIT
I_{CC}	MAX	0.01	0.01	0.01	0.01	mA
I_{OH}	MAX	-32	-16	-8	-4	mA
I_{OL}	MAX	32	16	8	4	mA

SWITCHING CHARACTERISTICS

PARAMETER	INPUT	OUTPUT	MAX or MIN	LVC 5V	LVC 3.3V	LVC 2.5V	LVC 1.8V
fmax			MIN	200	175	175	80
tw	CLK		MIN	2	2.7	2.7	6.2
	$\overline{PRE}$ or $\overline{CLR}$ low			2	2.7	2.7	6.2
tsu	Data		MIN	1.1	1.3	1.7	2.9
	$\overline{PRE}$ or $\overline{CLR}$ inactive			1	1.2	1.4	1.9
th			MIN	0.5	1.2	0.3	0
t_{PLH}	CLK	Q	MAX	4.1	5.9	7.1	13.4
t_{PHL}				4.1	5.9	7.1	13.4
t_{PLH}	CLK	$\overline{Q}$	MAX	4.4	6.2	7.7	14.4
t_{PHL}				4.4	6.2	7.7	14.4
t_{PLH}	$\overline{PRE}$ or $\overline{CLR}$	Q or $\overline{Q}$	MAX	4.1	5.9	7	12.9
t_{PHL}				4.1	5.9	7	12.9

UNIT:ns

FUNCTION TABLE

INPUT				OUTPUT	
$\overline{PRE}$	$\overline{CLR}$	CLK	D	Q	$\overline{Q}$
L	H	X	X	H	L
H	L	X	X	L	H
L	L	X	X	H†	H†
H	H	↑	H	H	L
H	H	↑	L	L	H
H	H	L	X	Q_0	$\overline{Q}_0$

† This configuration is nonstable; that is, it does not persist when $\overline{PRE}$ or $\overline{CLR}$ returns to its inactive (high) level.

2G86

RECOMMENDED OPERATING CONDITIONS

PARAMETER	MAX or MIN	LVC 5V	LVC 3.3V	LVC 2.5V	LVC 1.8V	UNIT
I_{CC}	MAX	0.01	0.01	0.01	0.01	mA
I_{OH}	MAX	-32	-24	-8	-4	mA
I_{OL}	MAX	32	24	8	4	mA

Logic Diagram

An exclusive-OR gate has many applications, some of which can be represented better by alternative logic symbols.

FUNCTION TABLE

(each gate)

INPUT A	INPUT B	OUTPUT Y
L	L	L
L	H	H
H	L	H
H	H	L

RECOMMENDED OPERATING CONDITIONS

PARAMETER	MAX or MIN	LVC 5V	LVC 3.3V	LVC 2.5V	LVC 1.8V	UNIT
I_{CC}	MAX	0.01	0.01	0.01	0.01	mA
I_{OH}	MAX	-32	-24	-8	-4	mA
I_{OL}	MAX	32	24	8	4	mA

2G125

DUAL BUS BUFFER GATE
WITH 3-STATE OUTPUTS

Logic Diagram

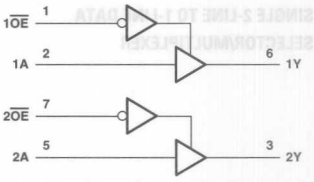

RECOMMENDED OPERATING CONDITIONS

PARAMETER	MAX or MIN	LVC 5V	LVC 3.3V	LVC 2.5V	LVC 1.8V	UNIT
I_{CC}	MAX	0.01	0.01	0.01	0.01	mA
I_{OH}	MAX	-32	-24	-8	-4	mA
I_{OL}	MAX	32	24	8	4	mA

FUNCTION TABLE

(each buffer)

INPUT $\overline{OE}$	INPUT A	OUTPUT Y
L	H	H
L	L	L
H	X	Z

SWITCHING CHARACTERISTICS

PARAMETER	INPUT	OUTPUT	MAX or MIN	LVC 5V	LVC 3.3V	LVC 2.5V	LVC 1.8V
t_{PLH}	A	Y	MAX	3.7	4.3	4.8	9.1
t_{PHL}				3.7	4.3	4.8	9.1
t_{PZH}	$\overline{OE}$	Y	MAX	3.8	4.7	5.6	9.9
t_{PZL}				3.8	4.7	5.6	9.9
t_{PHZ}	$\overline{OE}$	Y	MAX	3.4	4.6	5.8	11.6
t_{PLZ}				3.4	4.6	5.8	11.6

UNIT:ns

PRODUCTION DATA information is current as of publication date. Products conform to specifications per the terms of Texas Instruments standard warranty. Production processing does not necessarily include testing of all parameters. See www.ti.com/sc/logic for the most current data sheets.

2G126

DUAL BUS BUFFER GATE WITH 3-STATE OUTPUTS

Logic Diagram

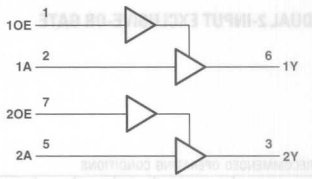

RECOMMENDED OPERATING CONDITIONS

PARAMETER	MAX or MIN	LVC 5V	LVC 3.3V	LVC 2.5V	LVC 1.8V	UNIT
I_{CC}	MAX	0.01	0.01	0.01	0.01	mA
I_{OH}	MAX	-32	-24	-8	-4	mA
I_{OL}	MAX	32	24	8	4	mA

FUNCTION TABLE
(each buffer)

INPUT		OUTPUT
OE	A	Y
H	H	H
H	L	L
L	X	Z

SWITCHING CHARACTERISTICS

PARAMETER	INPUT	OUTPUT	MAX or MIN	LVC 5V	LVC 3.3V	LVC 2.5V	LVC 1.8V
t_{PLH}	A	Y	MAX	3.2	4	4.9	9.8
t_{PHL}				3.2	4	4.9	9.8
t_{PZH}	OE	Y	MAX	3.1	4.1	5	10
t_{PZL}				3.1	4.1	5	10
t_{PHZ}	OE	Y	MAX	3.3	4.4	5.7	12.6
t_{PLZ}				3.3	4.4	5.7	12.6

UNIT:ns

2G157

SINGLE 2-LINE TO 1-LINE DATA SELECTOR/MULTIPLEXER

Logic Diagram

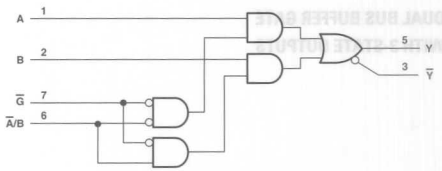

RECOMMENDED OPERATING CONDITIONS

PARAMETER	MAX or MIN	LVC 5V	LVC 3.3V	LVC 2.5V	LVC 1.8V	UNIT
I_{CC}	MAX	0.01	0.01	0.01	0.01	mA
I_{OH}	MAX	-32	-24	-8	-4	mA
I_{OL}	MAX	32	24	8	4	mA

FUNCTION TABLE

INPUT				OUTPUT	
$\overline{G}$	A/B	A	B	Y	$\overline{Y}$
H	X	X	X	L	L
L	L	L	X	L	H
L	L	H	X	H	L
L	H	X	L	L	H
L	H	X	H	H	L

SWITCHING CHARACTERISTICS

PARAMETER	INPUT	OUTPUT	MAX or MIN	LVC 5V	LVC 3.3V	LVC 2.5V	LVC 1.8V
t_{PLH}	A or B	Y or $\overline{Y}$	MAX	4	6	8	14
t_{PHL}				4	6	8	14
t_{PLH}	$\overline{A}$/B	Y or $\overline{Y}$	MAX	4	6	9	16
t_{PHL}				4	6	9	16
t_{PLH}	$\overline{G}$	Y or $\overline{Y}$	MAX	4	6	8	14
t_{PHL}				4	6	8	14

UNIT:ns

2G240

DUAL BUFFERS/DRIVERS
WITH 3-STATE OUTPUTS

Logic Diagram

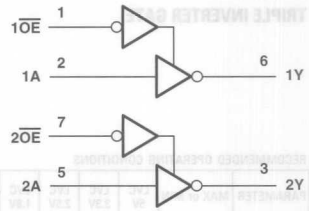

RECOMMENDED OPERATING CONDITIONS

PARAMETER	MAX or MIN	LVC 5V	LVC 3.3V	LVC 2.5V	LVC 1.8V	UNIT
I_{CC}	MAX	0.01	0.01	0.01	0.01	mA
I_{OH}	MAX	-32	-24	-8	-4	mA
I_{OL}	MAX	32	24	8	4	mA

FUNCTION TABLE
(each buffer)

INPUT		OUTPUT
$\overline{OE}$	A	Y
L	H	L
L	L	H
H	X	Z

SWITCHING CHARACTERISTICS

PARAMETER	INPUT	OUTPUT	MAX or MIN	LVC 5V	LVC 3.3V	LVC 2.5V	LVC 1.8V
t_{PLH}	A	Y	MAX	4	4.6	5.5.	11.3
t_{PHL}				4	4.6	5.5	11.3
t_{PZH}	$\overline{OE}$	Y	MAX	5	5.4	6.6	11.7
t_{PZL}				5	5.4	6.6	11.7
t_{PLZ}	$\overline{OE}$	Y	MAX	4.2	5.5	5.7	12.8
t_{PHZ}				4.2	5.5	5.7	12.8

UNIT:ns

2G241

DUAL BUFFER/DRIVER
WITH 3-STATE OUTPUTS

Logic Diagram

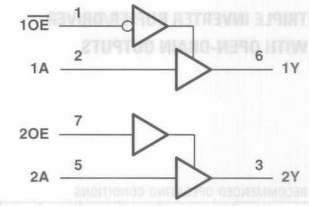

RECOMMENDED OPERATING CONDITIONS

PARAMETER	MAX or MIN	LVC 5V	LVC 3.3V	LVC 2.5V	LVC 1.8V	UNIT
I_{CC}	MAX	0.01	0.01	0.01	0.01	mA
I_{OH}	MAX	-32	-24	-8	-4	mA
I_{OL}	MAX	32	24	8	4	mA

FUNCTION TABLE

INPUT		OUTPUT
$\overline{1OE}$	1A	1Y
L	H	H
L	L	L
H	X	Z

INPUT		OUTPUT
2OE	2A	2Y
H	H	H
H	L	L
L	X	Z

SWITCHING CHARACTERISTICS

PARAMETER	INPUT	OUTPUT	MAX or MIN	LVC 5V	LVC 3.3V	LVC 2.5V	LVC 1.8V
t_{PLH}	A	Y	MAX	3.7	4.3	4.8	8.8
t_{PHL}				3.7	4.3	4.8	8.8
t_{PZL}	$\overline{OE}$	Y	MAX	3.8	4.7	5.6	9.9
t_{PZH}				3.8	4.7	5.6	9.9
t_{PLZ}	$\overline{OE}$	Y	MAX	3.4	4.4	5.8	11.6
t_{PHZ}				3.4	4.4	5.8	11.6
t_{PZL}	OE	Y	MAX	3.3	4.1	4.7	8.8
t_{PZH}				3.3	4.1	4.7	8.8
t_{PLZ}	OE	Y	MAX	3.3	4.2	5.2	12.5
t_{PHZ}				3.3	4.2	5.2	12.5

UNIT:ns

3G04

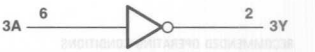

RECOMMENDED OPERATING CONDITIONS

PARAMETER	MAX or MIN	LVC 5V	LVC 3.3V	LVC 2.5V	LVC 1.8V	UNIT
I_{CC}	MAX	0.01	0.01	0.01	0.01	mA
I_{OH}	MAX	-32	-24	-8	-4	mA
I_{OL}	MAX	32	24	8	4	mA

FUNCTION TABLE
(each inverter)

INPUT A	OUTPUT Y
H	L
L	H

SWITCHING CHARACTERISTICS

PARAMETER	INPUT	OUTPUT	MAX or MIN	LVC 5V	LVC 3.3V	LVC 2.5V	LVC 1.8V
t_{PLH}	A	Y	MAX	3.2	4.1	4.4	7.9
t_{PHL}				3.2	4.1	4.4	7.9

UNIT:ns

3G06

TRIPLE INVERTER BUFFER/DRIVER WITH OPEN-DRAIN OUTPUTS

Logic Diagram

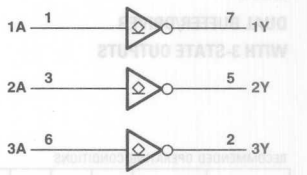

RECOMMENDED OPERATING CONDITIONS

PARAMETER	MAX or MIN	LVC 5V	LVC 3.3V	LVC 2.5V	LVC 1.8V	UNIT
I_{CC}	MAX	0.01	0.01	0.01	0.01	mA
V_O	MAX	5.5	5.5	5.5	5.5	V
I_{OL}	MAX	32	24	8	4	mA

FUNCTION TABLE
(each inverter)

INPUT A	OUTPUT Y
H	L
L	H

SWITCHING CHARACTERISTICS

PARAMETER	INPUT	OUTPUT	MAX or MIN	LVC 5V	LVC 3.3V	LVC 2.5V	LVC 1.8V
t_{PLH}	A	Y	MAX	2.9	3.4	3.9	7.2
t_{PHL}				2.9	3.4	3.9	7.2

UNIT:ns

3G07

TRIPLE BUFFER/DRIVER WITH OPEN-DRAIN OUTPUTS

Logic Diagram

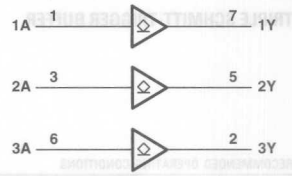

RECOMMENDED OPERATING CONDITIONS

PARAMETER	MAX or MIN	LVC 5V	LVC 3.3V	LVC 2.5V	LVC 1.8V	UNIT
I_{CC}	MAX	0.01	0.01	0.01	0.01	mA
V_O	MAX	5.5	5.5	5.5	5.5	V
I_{OL}	MAX	32	24	8	4	mA

FUNCTION TABLE
(each buffer/driver)

INPUT A	OUTPUT Y
H	H
L	L

SWITCHING CHARACTERISTICS

PARAMETER	INPUT	OUTPUT	MAX or MIN	LVC 5V	LVC 3.3V	LVC 2.5V	LVC 1.8V
t_{PLH}	A	Y	MAX	2.9	3.7	4.3	7.8
t_{PHL}				2.9	3.7	4.3	7.8

UNIT:ns

3G14

TRIPLE SCHMITT-TRIGGER INVERTER

Logic Diagram

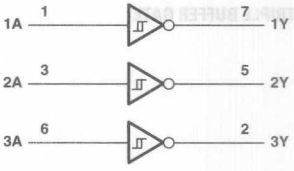

RECOMMENDED OPERATING CONDITIONS

PARAMETER	MAX or MIN	LVC 5V	LVC 3.3V	LVC 2.5V	LVC 1.8V	UNIT
I_{CC}	MAX	0.01	0.01	0.01	0.01	mA
I_{OH}	MAX	-32	-24	-8	-4	mA
I_{OL}	MAX	32	24	8	4	mA

FUNCTION TABLE
(each inverter)

INPUT A	OUTPUT Y
H	L
L	H

SWITCHING CHARACTERISTICS

PARAMETER	INPUT	OUTPUT	MAX or MIN	LVC 5V	LVC 3.3V	LVC 2.5V	LVC 1.8V
t_{PLH}	A	Y	MAX	4.3	5.4	5.7	9.2
t_{PHL}				4.3	5.4	5.7	9.2

UNIT:ns

3G17

TRIPLE SCHMITT-TRIGGER BUFFER

Logic Diagram

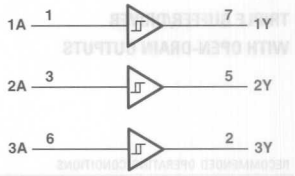

RECOMMENDED OPERATING CONDITIONS

PARAMETER	MAX or MIN	LVC 5V	LVC 3.3V	LVC 2.5V	LVC 1.8V	UNIT
I_{CC}	MAX	0.01	0.01	0.01	0.01	mA
I_{OH}	MAX	-32	-24	-8	-4	mA
I_{OL}	MAX	32	24	8	4	mA

FUNCTION TABLE

INPUT A	OUTPUT Y
H	H
L	L

SWITCHING CHARACTERISTICS

PARAMETER	INPUT	OUTPUT	MAX or MIN	LVC 5V	LVC 3.3V	LVC 2.5V	LVC 1.8V
t_{PLH}	A	Y	MAX	TBD	TBD	TBD	TBD
t_{PHL}				TBD	TBD	TBD	TBD

UNIT:ns

3G34

TRIPLE BUFFER GATE

Logic Diagram

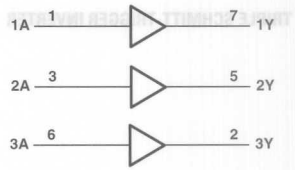

RECOMMENDED OPERATING CONDITIONS

PARAMETER	MAX or MIN	LVC 5V	LVC 3.3V	LVC 2.5V	LVC 1.8V	UNIT
I_{CC}	MAX	0.01	0.01	0.01	0.01	mA
I_{OH}	MAX	-32	-24	-8	-4	mA
I_{OL}	MAX	32	24	8	4	mA

FUNCTION TABLE
(each gate)

INPUT A	OUTPUT Y
H	H
L	L

SWITCHING CHARACTERISTICS

PARAMETER	INPUT	OUTPUT	MAX or MIN	LVC 5V	LVC 3.3V	LVC 2.5V	LVC 1.8V
t_{PLH}	A	Y	MAX	3.2	4.1	4.4	7.9
t_{PHL}				3.2	4.1	4.4	7.9

UNIT:ns

PRODUCTION DATA information is current as of publication date. Products conform to specifications per the terms of Texas Instruments standard warranty. Production processing does not necessarily include testing of all parameters. See www.ti.com/sc/logic for the most current data sheets.

FUNCTION

FUNCTION

GATE (AND/NAND/OR/NOR)

Description	No. of Input	Curcuit	Input	Output	Device	Technology: Bipolar TTL	Bipolar LS	Bipolar S	Bipolar ALS	Bipolar AS	Bipolar F	CMOS HC	CMOS HCT	BiCMOS BCT	BiCMOS ABT	BiCMOS LVT	BiCMOS ALVT	Advanced CMOS AC	Advanced CMOS ACT	Advanced CMOS AHC	Advanced CMOS AHCT	Advanced CMOS LV	Advanced CMOS LVC	Advanced CMOS ALVC	Advanced CMOS AVC
POS-AND	2	4			08	×	○	○	○	○	○	○/○	○/○					○/○/○	○/○/○	○	○	○A	○A	○	
				OC	09	×	○	○	○		×	×/-													
				OC	15		×	×	×																
				BUF	1008				×A	○A															
			SCH		7001							○/-													
		6		BUF	808				×	○B		×/-													
				BUF	1808				×	×															
	3	3			11		○	×	○A	○	○	○/○	-/○					×/○/-	×/○/-			○A			
				BUF	1011				×																
	4	2			21		○		○A	○	○	○/○	×/○					×/-/-	×/-/-			○A			
POS-NAND		2			8003				×	○															
		4			00	○	○	○	○A	○	○	○/○	○/○					○/○/○	○/○/○	○	○	○A	○A	○	
				OC	01	×	×		×			×/-													
				OC	03	×	○	×	○B			○/○	-/○												
			SCH		24		×																		
				OC	26	×	○																		
	2			BUF	37	×	○	○	○A		×														
				OC	38	○	○	○	○B		○														
			SCH		132	×	○	×				○/○	-/○					×/-/-	×/-/-	○	○	○A			
				BUF	1000				×A	○A															
				OC	1003				×A																
			SCH	OC	7003							×/-													
				OC	39	×																			
		6		BUF	804				○A	○B		×/-													
				BUF	1804				×A	×															
	3	3			10	○	○	○	○A	○	○	○/○	-/○					×/○/○	×/○/○			○A	○A	○	
				OC	12	×	×		×																
				BUF	1010				×																
		2	SCH		13	×	×											×/-/-	-/×/-						
			SCH		18		×																		
	4				20	×	○	×	○A	○	○	○/○	-/○					×/×/○	×/×/○			○A			
				OC	22	×	×	×	×																
				BUF	40	×	×	×	×		×														
				BUF	140			○																	
				BUF	1020				×																
		3	SCH		618		×																		
	8	1			30	×	○	×	○A	○	○	×/○	-/○					×/-/×	○/-/×						
	12	1		3S	134			×																	
	13	1			133			×	○			×/-													
POS- OR	2	4			32	○	○	○	○	○	○	○/○	○/○					○/○/○	○/○/○	○	○	○A	○A	○	
				BUF	1032				×	○A															
			SCH		7032							○/-													
		6		BUF	832				○A	○B		×/-													
				BUF	1832				×A	×															
	3	3			4075							×/○	-/○												
POS- NOR					02	○	○	○	○A	○	○	○/○	○/○					×/-/○	×/-/○	○	○	○A	○A		
				BUF	28	×	×		×																
				OC	33	×	○		○A																
		4			36						×	×/-													
	2			BUF	128	○																			
				BUF	1002				×A																
			SCH		7002							○/-													
				BUF	1036					×A															
		6		BUF	805				○A	○B		×/-													
				BUF	1805				×	×															
	3	3			27	×	○		○A	○	○	○/○	-/○					×/-/×	×/-/×			○A			
	4	2			23	×																			
					25	○																			
					4002							×/○													
	5	2			260			○			○														

Explanatory notes [Input] SCH : Schmitt-Trigger Inputs

[Output] BUF : Buffered Output OC : Open-Collector Output 3S : 3-State Output

Status ○ : Product available in technology indicated * : New product planned in technology indicated

× : Discontinued ■ : Not recommended for new designs

HC : SN74HCxx / CD74HCxx

HCT : SN74HCxx / CD74HCTxx

BCT : SN74BCTxx / SN64BCTxx

AC : 74AC11xxx (Product available in reduced-noise advanced CMOS : 11000 Series) / SN74ACxx / CD74ACxx

ACT : 74ACT11xxx (Product available in reduced-noise advanced CMOS : 11000 Series) / SN74ACTxx / CD74ACTxx

GATE (EX-OR/EX-NOR/INVERTER/NONINVERTER/etc.)

Description	No. of Input	Curcuit	Input	Output	Device	Technology: Bipolar TTL	Bipolar LS	Bipolar S	Bipolar ALS	Bipolar AS	Bipolar F	CMOS HC	CMOS HCT	BiCMOS BCT	BiCMOS ABT	BiCMOS LVT	BiCMOS ALVT	Advanced CMOS AC	Advanced CMOS ACT	Advanced CMOS AHC	Advanced CMOS AHCT	Advanced CMOS LV	Advanced CMOS LVC	Advanced CMOS ALVC	Advanced CMOS AVC
EX-OR	2	4			86	×	○A	○	○	○A	○	○/○	-/○					○/○/○	×/○/○	○	○	○A	○A		
				OC	136	×	○		×	×																
					386		×					×/-														
EX-NOR	2	4		OC	266		○					○/-														
					810				×	×								×/-/-	×/-/-							
				OC	811				×	×																
					7266							×/○														
EX-OR/NOR	2	4			135			×																		
INVERTING	1	6			04	○	○	○	○B	○	○	○/○	○/○					○/○/○	○/○/○	○	○	○A	○A	○	
				OC	05	×	○	○	○A			○/-						-/-/○	-/-/○	○		○A			
				OC	06	○	○															○A	○A		
			SCH		14	○	○					○/○	○/○					×/○/○	×/○/○	○	○	○A	○A	○	
				OC	16	○																			
			SCH		19		○A																		
				BUF	1004				○	○A															
				OC	1005				○																
					4049							−/○													
					U04							○/○									○		○A	○A	
		8	SCH		619		×																		
NON-INVERTING	1	4			425	×																			
					426	×																			
		6		OC	07	○	○															○A	○A		
				OC	17	○																			
					34				×	×								×/-/-	×/-/-						
				OC	35				○A																
				BUF	1034				○	○A															
				OC	1035				○																
					4050							−/○													
OTHER	1	6			63		×																		
	2	6			31		○																		
	4	2			50	×																			
					51	×	○	×			×	×/-						×/-/-	×/-/-						
					60	×																			
	8	1			53	×																			
					55		×																		
					4078							×/-													
	10	1			54	×	×																		
	11	1			64			×			×							×/-/-	×/-/-						
				OC	65			×																		
	12	3		BUF	800													×/-/-	×/-/-						
				BUF	802													×/-/-	×/-/-						
	-	6			7006							×/-													
					7008							×/-													
					7074							×/-													
					7075							×/-													
					7076							×/-													

Explanatory notes [Input] SCH : Schmitt-Trigger Inputs

[Output] BUF : Buffered Output OC : Open-Collector Output 3S : 3-State Output

Status ○ : Product available in technology indicated * : New product planned in technology indicated

× : Discontinued ■ : Not recommended for new designs

HC : SN74HCxx / CD74HCxx

HCT : SN74HCxx / CD74HCTxx

BCT : SN74BCTxx / SN64BCTxx

AC : 74AC11xxx (Product available in reduced-noise advanced CMOS : 11000 Series) / SN74ACxx / CD74ACxx

ACT : 74ACT11xxx (Product available in reduced-noise advanced CMOS : 11000 Series) / SN74ACTxx / CD74ACTxx

BUFFER/DRIVER(NON-INVERTING)

Description	No. of Output	Output	Device	Technology																				
				Bipolar						CMOS			BiCMOS				Advanced CMOS							
				TTL	LS	S	ALS	AS	F	HC	HCT	BCT	ABT	LVT	ALVT	AC	ACT	AHC	AHCT	LV	LVC	ALVC	AVC	
NON-INVERTING	4	3S	125	×	○A				○	○/○	○/○	○A/○A	○	H○				○	○	○A	○A	○		
		3S	126	×	○A				○	○/○	-/○	×A/○A	○	H○				○	○	○A	○A	○		
	6	3S	365	×	○A					○/○	-/○													
		3S	367	×	○A					○/○	-/○							○	○	○A				
	8	3S	241		○	○	○C	○A	○	○/○	×/○	○/-	○A	H○		×/○/-	×/○/○				-			
		3S	244		○	○	○C/ ○C1	○A	○	○/○	○/○	○/○	○A	○B/ T○/ H○A/ Z○		○/○/○	○/○/○	○	○	○A	○A/ H○A/ Z○A	○/H○		
		3S	455									×/-												
		3S	465		○		×																	
		3S	467		×		×																	
		3S	541		○		○/○1		○	○/○	○/○	○A/-	○B	H○		-/-/○	-/-/○	○	○	○A	○A			
		3S	656													×/-/-	×/-/-							
		3S	747				×																	
		OC	757					○				○/○												
		OC	760				○	○				○/-												
		3S	1241																					
		3S	1244				○A																	
		R3S	2241									○/-	○											
		R3S	2244						×			○/-	○A								○A			
		R3S	2541				○																	
		3S	25241									×/-												
		3S	25244									○/○												
		OC	25757									×/-												
		OC	25760									×/-												
	10	3S	827										○			×/-/-	×/-/-				○A			
		R3S	2827									○C/-	○											
		3S	29827				○					○B/-												
	11	R3S	5400										○A											
	12	3S	5402										○A											
		R3S	16903																			H○		
	16	3S	16241										○A	H○			×				H×A			
		3S	16244										○A/ H ○	○B/ H○A	H○	○	○	○	○		○A/ H○A/ Z○A	○A/ H○	○	
		3S	16541										○A	H○			○	○	○		H○A	×		
		R3S	162241											H○										
		R3S	162244										○	○A/H○	H○						○A/ H○A	H○		
		R3S	162541											H○								×		
	18	3S	16825										○				○					H○		
		R3S	162825										○											
		3S	16835											H○								○/ H○	○	
		R3S	162835																			○/ H○		
	20	3S	16827										○		H○		○					H○	○	
		3S	162827										○A		H○							H○		
	32	3S	32244											○/H○	H○						○/H○	H○		

Explanatory notes [Output] 3S : 3-State Output R3S : Series Resistor and 3-State Output OC : Open-Collector Output

Status ○ : Product available in technology indicated * : New product planned in technology indicated

× : Discontinued ■ : Not recommended for new designs

HC : SN74HCxx / CD74HCxx

HCT : SN74HCxx / CD74HCTxx

BCT : SN74BCTxx / SN64BCTxx

AC : 74AC11xxx (Product available in reduced-noise advanced CMOS : 11000 Series) / SN74ACxx / CD74ACxx

ACT : 74ACT11xxx (Product available in reduced-noise advanced CMOS : 11000 Series) / SN74ACTxx / CD74ACTxx

INVERTING	8	3S	240		○	○	○A/ ○A1	○A	○	○/○	○/○	○/-	○A	○A/H○		○/○/○	○/○/○	○	○	○A	○A/ Z○A		
		3S	456									×/-											
		3S	466		×		×																
		3S	468		×		×																
		3S	540		○		○/○1		×	○/○	○/○	○A/-	○	H○		-/-/○	-/-/○	○	○	○A	○A		
		3S	655													×/-/-	×/-/-						
		3S	746				×																
		OC	756				×	○				○/-											
		OC	763					×															
		3S	1240				×																
		R3S	2240				×					○/-	○A										
		R3S	2540				×																
		3S	25240									×/-											
		OC	25756									×/-											
	10	3S	828													×/-/-	×/-/-				○A		
		R3S	2828									×/-											
		3S	29828				■					×B/-											
	11	R3S	5401										○										
	12	R3S	5403										○										
	16	3S	16240										○A	○/H○	H○	×	○	○	○		H○A/ Z○A	H○	
		3S	16540										○A				×	○	○		H○A	×	
		R3S	162240											○/H○								-	
		R3S	162540																			×	
	20	3S	16828														×					×	
	32	3S	32240											○									

INVERTING AND NON-INVERTING	8	3S	230				×	×															
		OC	762					×															

ADDRESS DRIVERS	1-2	3S	16830																			H*	
		R3S	162830																			H○/ HS○	
	1-4	3S	16344																			H○	
		3S	16831																			H○	
		3S	16832																			H○	
		R3S	162344																			H○	
		R3S	162831																			○/H○	
		R3S	162832																			H○	

Explanatory notes [Output] 3S : 3-State Output R3S : Series Resistor and 3-State Output OC : Open-Collector Output

Status ○ : Product available in technology indicated * : New product planned in technology indicated

× : Discontinued ■ : Not recommended for new designs

HC : SN74HCxx / CD74HCxx

HCT : SN74HCxx / CD74HCTxx

BCT : SN74BCTxx / SN64BCTxx

AC : 74AC11xxx (Product available in reduced-noise advanced CMOS : 11000 Series) / SN74ACxx / CD74ACxx

ACT : 74ACT11xxx (Product available in reduced-noise advanced CMOS : 11000 Series) / SN74ACTxx / CD74ACTxx

BUS TRANSCEIVER(NON-INVERTING)

Description	No. of Output	Output	Device	Technology: Bipolar TTL	Bipolar LS	Bipolar S	Bipolar ALS	Bipolar AS	Bipolar F	CMOS HC	CMOS HCT	BiCMOS BCT	BiCMOS ABT	BiCMOS LVT	BiCMOS ALVT	Advanced CMOS AC	Advanced CMOS ACT	Advanced CMOS AHC	Advanced CMOS AHCT	Advanced CMOS LV	Advanced CMOS LVC	ALVC	AVC
NON-INVERTING	4	3S	226			×																	
		3S	440		×																		
		OC	441		×																		
		3S	442		○																		
		3S	443		×																		
		3S	444		×																		
		OC	448		×																		
		3S	449		×																		
		3S	243		○		○A	×	×	-/○	-/○												
		3S	1243																				
	8	3S	245		○		○A/○A1	○	○	○/○	○/○	○/○	○B/H○	○B/H○A/R○		○/○/○	○/○/○	○	○	○A	○A/H○A/Z○A	○/H○	
		3S	470													X/-/-	X/-/-						
		3S	472													X/-/-	X/-/-						
		3S	474													X/-/-	X/-/-						
		3S	543						○			○/-	○A	H○		X/-/-	○/-/-				○A		
		OC	615				×																
		OC	621		×		○A/○A1	×	×														
		3S	623		○		○A	×	×	○/-	○/-	○/-	○			X/-/○	○/-/○						
		3SOC	639		×		○A	×															
		OC	641		○		○A/○A1	○															
		3S	645		○/○1		○A/○A1	○		○/-	○/-												
		3S	646		○		○A	○		○/○	○/○	○/-	○/○A	H○		X/-/○	X/-/○				○A		
		OC	647		×		×																
		3S	652		○		○A	○		○/○	○/○	○/-	○/○A	H○		X/-/○	○/-/○				○A		
		3SOC	654		×		○																
		3S	657						○			X/-	○A			X/-/-	X/-/-						
		3S	659							X/-	X/-												
		3S	665							X/-	X/-												
		3S	852					×								X/-/-	X/-/-						
		3S	856					×								X/-/-	X/-/-						
		3S	877					×								X/-/-	X/-/-						
		3S	899									X/-											
		3S	1245				○A																
		3S	1645				○A																
		3S	2245									○/-	○/R○	H○							R○A		
		3S	2623				×																
		3S	2645					×															
		3S	2952									X/-	○A	H○							○A		
		3S	25245									○/-	○H										
		3S	25543									X/-											
		3S	25621									X/-											
		3S	25623									X/-											
		3S	25641									X/-											
		3S	25646									X/-											
		3S	25647									X/-											
		3S	25652									X/-											
		3S	25654									X/-											
		3S	3245											×							C○A		
		3S	4245																		○A/C○A		
	8+1P	3SOC	833										○			X/-/-	X/-/-						
		3SOC	853										○			X/-/-	X/-/-						
		3SOC	29833				×					X/-											
		3SOC	29853				×					X/-											
	9	3S	863										○			X/-/-	X/-/-				○A		
		3S	29863				○					○B/-											
	9X4	3S	16409																			H○/HR○	
	10	3S	861										○			X/-/-	X/-/-				○A		
		3S	29861				×					×B/-											

Explanatory notes [No. of Output] +P : With Parity Bit

[Output] 3S : 3-State Output R3S : Series Resistor and 3-State Output

OC : Open-Collector Output 3SOC : 3-State Output / Open-Collector Output

Status ○ : Product available in technology indicated * : New product planned in technology indicated

× : Discontinued ■ : Not recommended for new designs

HC : SN74HCxx / CD74HCxx

HCT : SN74HCxx / CD74HCTxx

BCT : SN74BCTxx / SN64BCTxx

AC : 74AC11xxx (Product available in reduced-noise advanced CMOS : 11000 Series) / SN74ACxx / CD74ACxx

ACT : 74ACT11xxx (Product available in reduced-noise advanced CMOS : 11000 Series) / SN74ACTxx / CD74ACTxx

BUS TRANSCEIVER (NON-INVERTING)

Description	No. of Output	Output	Device	Technology																				
				Bipolar						CMOS			BiCMOS			Advanced CMOS								
				TTL	LS	S	ALS	AS	F	HC	HCT	BCT	ABT	LVT	ALVT	AC	ACT	AHC	AHCT	LV	LVC	ALVC	AVC
NON-INVERTING	12/24	3S	16268																			×	
		3S	16269																			H○/HR○A	○
		3S	16270																			H○	
		3S	16271																			H○	
		3S	16272																			×	
		3S	162268																			H○	
		3S	162269																				
	16/32	3S	162280																			HG○	
		3S	16245										○A/H○	○B/H○A	H○	○	○	*	○		○A/H○A/HR○A/Z○A	H○/HR○	○
	16	3S	16334																			○/H○	○
		3S	16470										○				×						
		3S	16543										○	H○	*	×	○				○/H○A	H○	
		3S	16623										○			×	○						
		3S	16646										○	H○		×	○				H○A	H○	○
		3S	16652										○	H○	*	○	○				H○A	×	
		3S	16952										○	H○			○				H○A	H○	
		R3S	162245										○/H○	○A/H○	H○						R○		
		R3S	164245																			○	○/H○
		R3S	162334																			○/H○	
	16X3	3S	32316										H○										
	18X3	3S	32318										H○										
	16+2P	3S	16657										○				○						
		3S	16833										○				×						
		3S	16853										○				×						
	18	3S	16472													×							
		3S	16474														×						
		3S	16500										○B	H○								H○	
		3S	16501										○	H○								H○	
		3S	16525																			H○	
		3S	16600										○								-	H○	
		3S	16601										○		H○						-	H○/HR○	
		3S	16834																			○	○
		3S	16863										○				○					H○	
		3S	16901																		H○	H○	
		R3S	162500										○										
		R3S	162501										○										
		R3S	162525																			H○	
		R3S	162600																				
		R3S	162601										○									H○/HR×	
		R3S	162834																			○	
	18/36	3S	16282																			H○	
		R3S	162282																			HG○	
	20	3S	16836																			H*	*
		3S	16861														○						
		R3S	162836																			○/H○	
	32	3S	32543										H○										
		3S	32952										×										
	36	3S	32245										H○	H○							○/H○A	H○	
		3S	32500										×										
		3S	32501										H○									H○	

Explanatory notes [No. of Output] +P : With Parity Bit

[Output] 3S : 3-State Output R3S : Series Resistor and 3-State Output

OC : Open-Collector Output 3SOC : 3-State Output / Open-Collector Output

Status ○ : Product available in technology indicated * : New product planned in technology indicated

× : Discontinued ■ : Not recommended for new designs

HC : SN74HCxx / CD74HCxx

HCT : SN74HCxx / CD74HCTxx

BCT : SN74BCTxx / SN64BCTxx

AC : 74AC11xxx (Product available in reduced-noise advanced CMOS : 11000 Series) / SN74ACxx / CD74ACxx

ACT : 74ACT11xxx (Product available in reduced-noise advanced CMOS : 11000 Series) / SN74ACTxx / CD74ACTxx

BUS TRANSCEIVER(INVERTING, NON-INVERTING/INVERTING)

Description	No. of Output	Output	Device	Technology: Bipolar TTL	Bipolar LS	Bipolar S	Bipolar ALS	Bipolar AS	Bipolar F	CMOS HC	CMOS HCT	BiCMOS BCT	BiCMOS ABT	BiCMOS LVT	BiCMOS ALVT	Advanced CMOS AC	Advanced CMOS ACT	Advanced CMOS AHC	Advanced CMOS AHCT	Advanced CMOS LV	Advanced CMOS LVC	Advanced CMOS ALVC	Advanced CMOS AVC
INVERTING	4	3S	242		×		×	×	×	×/-	×/-												
		3S	446		×																		
		3S	1242				×																
		R3S	2242				×																
		3S	544						×			×/-				×/-/-	×/-/-						
		3S	471													×/-/-	×/-/-						
		3S	473													×/-/-	×/-/-						
		3S	475													×/-/-	×/-/-						
		OC	614				×																
		3S	620		×		○A	×	×	×/-	×/-	×/-	○			×/-/-	×/-/-						
		OC	622		×		×	×	×														
		3SOC	638		×		○A/ ○A1	○A															
		3S	640		○/ ○1		○B/ ○B1	○		○/○	×/○	○/-	○			×/-/-	×/-/-						
		OC	642		○/ ○1		○A/ ○A1	×				×/-											
		3S	648		○		○A	○		×/-	×/-	×/-				×/-/-	×/-/-						
	8	OC	649		×		×																
		3S	651		×		○A	×		×/-	×/-	×/-	○			×/-/-	×/-/○						
		3SOC	653		×		○																
		3S	658							×/-	×/-												
		3S	664							×/-	×/-												
		3S	1640				×																
		3S	2620				×																
		3S	2640					×				×/-											
		3S	2953									×/-											
		3S	25620									×/-											
		3S	25622									×/-											
		3S	25640									×/-											
		3S	25642									○/-											
		3S	25648									×/-											
		3S	25649									×/-											
		3S	25651									×/-											
		3S	25653									×/-											
	8+1P	3SOC	834													×/-/-	×/-/-						
		3SOC	854													×/-/-	×/-/-						
		3SOC	29834				×					×/-											
		3SOC	29854				○					○/-											
	9	3S	864													×/-/-	×/-/-						
		3S	29864				×					○B/-											
	10	3S	862													×/-/-	×/-/-						
		3S	29862				×					×B/-											
	16	3S	16471																				
		3S	16544														×						
		3S	16620													×	×						
		3S	16640										○			×	×						
		3S	16648														×						
		3S	16651														○						
		3S	16862																				
		3S	16953														×						
	18	3S	16475														×						
		3S	16524																			H○	
		3S	16864														×						
NON-INVERTING /INVERTING	8	3S	643		×		×	×		×/-	×/-					×/-/-	×/-/-						
		OC	644		×		×	×															
		OC	758				×	×															
		OC	759					×															
		3S	7340							×/-													

Explanatory notes [No. of Output] +P : With Parity Bit

[Output] 3S : 3-State Output R3S : Series Resistor and 3-State Output

OC : Open-Collector Output 3SOC : 3-State Output / Open-Collector Output

Status ○ : Product available in technology indicated * : New product planned in technology indicated

× : Discontinued ■ : Not recommended for new designs

HC : SN74HCxx / CD74HCxx

HCT : SN74HCxx / CD74HCTxx

BCT : SN74BCTxx / SN64BCTxx

AC : 74AC11xxx (Product available in reduced-noise advanced CMOS : 11000 Series) / SN74ACxx / CD74ACxx

ACT : 74ACT11xxx (Product available in reduced-noise advanced CMOS : 11000 Series) / SN74ACTxx / CD74ACTxx

J/K FLIP-FLOP

Trigger	Curcuit	PRE · CLR	Output	Q · /Q	Device	Technology: Bipolar TTL	Bipolar LS	Bipolar S	Bipolar ALS	Bipolar AS	Bipolar F	CMOS HC	CMOS HCT	BiCMOS BCT	BiCMOS ABT	BiCMOS LVT	BiCMOS ALVT	Advanced CMOS AC	Advanced CMOS ACT	Advanced CMOS AHC	Advanced CMOS AHCT	Advanced CMOS LV	Advanced CMOS LVC	Advanced CMOS ALVC	Advanced CMOS AVC
NEG	2	B	2S	B	107	○	○A					×/○	-/○												
		B	2S	B	112		○A	○A	○A		○	○/○	-/○					×/-/○	×/-/○				○A		
		B	2S	B	113		×	×	×		×	×/-													
		B	2S	B	114		×	×	×		×	×/-													
	4	B	2S	Q	276	×																			

D-TYPE FLIP-FLOP

Trigger	Curcuit	PRE · CLR	Output	Q · /Q	Device	Technology: Bipolar TTL	Bipolar LS	Bipolar S	Bipolar ALS	Bipolar AS	Bipolar F	CMOS HC	CMOS HCT	BiCMOS BCT	BiCMOS ABT	BiCMOS LVT	BiCMOS ALVT	Advanced CMOS AC	Advanced CMOS ACT	Advanced CMOS AHC	Advanced CMOS AHCT	Advanced CMOS LV	Advanced CMOS LVC	Advanced CMOS ALVC	Advanced CMOS AVC
POS	2	B	2S	B	74	×	○A	○	○A	○A	○	○/○	○/○					○/○/○	○/○/○	○	○	○A	○A		
	4	C	2S	B	171		×																		
		C	2S	B	175	×	○	○	○	○B	○	○/○	-/○					○/-/○	×/-/○			○A			
			2S	B	379		×				×	×/-						×/-/-	×/-/-						
	6	C	2S	Q	174	×	○	○	○	○	○A	○/○	-/○					×/-/○	×/-/○	○	○	○A			
			2S	Q	378		○				×	×/-						×/-/-	×/-/-						
	8	C	2S	Q	273	×	○		○		×	○/○	○/○		○	H○		×/-/○	×/-/○	○	○	○A			
			3S	Q	374		○	○	○A	○	○	○/○	○/○	○/-	○A	H○		×/○/○	○/○/○	○	○	○A	○A	H○	
			2S	Q	377		○			○A	○	○/○	○/○		○A			×/-/-	×/-/-						
			3S	Q	478													×/-/-	×/-/-						
			3S	/Q	534				○A	×	×	×/○	×/○	×/-	○A			×/○/○	×/○/-						
			3S	/Q	564				○B		×	×/○	×/○	×/-				×/○/-	×/○/-						
			3S	Q	574				○B	○	○	○/○	○/○	○/-	○A	H○		×/○/○	×/○/○	○	○	○A	○A		
			3S	Q	575				○A	×															
			3S	/Q	576				○B	○															
			3S	/Q	577				○A	×															
			3S	Q	825					○A								×/-/-	×/-/-						
			3S	Q	826					×								×/-/-	×/-/-						
		C	3S	Q	874				○B	○								×/-/-	×/-/-						
		P	3S	/Q	876				○A	○															
		C	3S	Q	878				×	×															
		C	3S	/Q	879				×A	×															
			3S	Q	4374					○B															
			3S	Q	29825				×	×				○/-											
			3S	Q	29826				×	×				×/-											
	9	C	3S	Q	823					○A					○			×/-/-	×/-/-				○A		
		C	3S	/Q	824					×A								×/-/-	×/-/-						
		C	3S	Q	29823				×	×				×/-											
		C	3S	/Q	29824				×	×				×/-											
	10		3S	Q	821					○A					○A			×/-/-	×/-/-				○A		
			3S	/Q	822					×								×/-/-	×/-/-						
			3S	Q	1821					×															
			3S	Q	29821				○	×				○/-											
			3S	/Q	29822				×	×				×/-											
	10X2		3S	Q	16820																			H○	
			3S	Q	162820																			H○	
	16		3S	Q	16374										○A	H○	H○	○	○	○	○		○A/H○A	H○	○
			3S	/Q	16534														×						
			3S	Q	162374											H○								H○	
	18	C	3S	Q	16823									○/○H				×	○					H○	
		C	3S	Q	162823										○A										
	20		3S	Q	16721												*							H○	
			3S	Q	16821										○		H○		×					H○	
			3S	Q	162721																			H○	
			3S	Q	162821																			×	
	22		3S	Q	16722																				○
	32		3S	Q	32374											H○	H○						H○A	H○	
			3S	Q	322374											H○									

Explanatory notes [Trigger] POS : Positive edge NEG : Negative Edge

[PRE · CLR] B : Preset and Clear C : Clear Only

[Output] 2S : Totem pole Output 3S : 3-State Output

[Q·/Q] B : Q·/Q-Output Q : Q-Output /Q : /Q-Output

Status ○ : Product available in technology indicated * : New product planned in technology indicated

× : Discontinued ■ : Not recommended for new designs

HC : SN74HCxx / CD74HCxx

HCT : SN74HCxx / CD74HCTxx

BCT : SN74BCTxx / SN64BCTxx

AC : 74AC11xxx (Product available in reduced-noise advanced CMOS : 11000 Series) / SN74ACxx / CD74ACxx

ACT : 74ACT11xxx (Product available in reduced-noise advanced CMOS : 11000 Series) / SN74ACTxx / CD74ACTxx

LATCH

Type	Curcuit	Output	PRE · CLR	Q · /Q	Device	Technology																				
						Bipolar						CMOS		BiCMOS				Advanced CMOS								
						TTL	LS	S	ALS	AS	F	HC	HCT	BCT	ABT	LVT	ALVT	AC	ACT	AHC	AHCT	LV	LVC	ALVC	AVC
S-R	4	2S		Q	279	×	○A																			
AD	8	2S		Q	259	×	○B		○			○/○	-/○					×/-/-	×/-/-							
	8	2S		Q	4724							×/-														
BIS	4	2S		Q	75	×	○					×/○	×/○					○/-/-								
	4	2S		Q	77							×/-														
	4	2S		Q	375		○					×/-														
	8	2S		Q	100	×																				
R/B	8	3S		Q	990				○																	
	8	3S		/Q	991				×																	
	8	3S	B	Q	666				○																	
	8	3S	C	Q	996				○																	
	8	3S	B	/Q	667				○																	
	9	3S	C	Q	992				○																	
	9	3S	C	/Q	993				×																	
	10	3S		Q	994				○																	
	10	3S		/Q	995				×																	
D	8	2S	C	Q	116	×																				
	8	3S		Q	373		○	○	○A	○	○	○/○	○/○	○/-	○	H○		×/○/○	○/○/○	○	○	○A	○A	H○		
	8	3S		Q	2373						○															
	8	3S		/Q	533				○A	○A	×	×/○	×/○	×/-	○A			×/○/-	×/○/-							
	8	3S		Q	573				○C	○A	○	○A/○	○/○	○/-	○A	H○		×/○/○	×/○/○	○	○	○A	○A			
	8	3S		/Q	563				○B		×	○/○	×/○	×/-				×/○/○	×/○/-							
	8	3S		/Q	580				○B	×																
	8	3S	C	Q	873				○B	×A								×/-/-	×/-/-							
	8	3S	P	Q	880				×A	×																
	8	3S	B	Q	845				×	×								×/-/-	×/-/-							
	8	3S	B	Q	29845				×	×				×/-												
	8	3S	B	/Q	846				×	×								×/-/-	×/-/-							
	8	3S	B	/Q	29846				×	×				×/-												
	9	3S	B	Q	843				○	×					○			×/-/-	×/-/-							
	9	3S	B	Q	1843																					
	9	3S	B	Q	29843				×	×				○/-												
	9	3S	B	/Q	844				×	×								×/-/-	×/-/-							
	9	3S	B	/Q	29844				×	×				×/-												
	10	3S		Q	841				○	×A					○A			×/-/-	×/-/-				○A			
	10	3S		Q	29841				×	×				×/-												
	10	3S		/Q	842				×	×								×/-/-	×/-/-							
	10	3S		/Q	29842					×				×/-												
	12/24	3S		Q	16260										H○									H○		
	12/24	3S		Q	162260										H○									H○		
	16	3S		Q	16373										○A	H○	H○	○	○	○	○		○A/H○A	H○	○	
	16	3S		/Q	16533														×							
	16	3S		Q	162373											H○								×		
	18	3S	B	Q	16843										○				×					×		
	20	3S		Q	16841										○				○					H○		
	20	3S		Q	162841										○									H○		
	32	3S		Q	32373											H○	H○						H○A			*

Explanatory notes [Type] S-R : S-R Latch AD : Addressable Latch BIS : Bistable Latch
R-B : Read-Back Latch D : D-Type Transparent Latch
[PRE · CLR] B : Preset and Clear C : Clear Only
[Output] 2S : Totem-Pole Output 3S : 3-State Output
[Q·/Q] B : Q·/Q-Output Q : Q-Output /Q : /Q-Output

Status ○ : Product available in technology indicated * : New product planned in technology indicated
× : Discontinued ■ : Not recommended for new designs
HC : SN74HCxx / CD74HCxx
HCT : SN74HCxx / CD74HCTxx
BCT : SN74BCTxx / SN64BCTxx
AC : 74AC11xxx (Product available in reduced-noise advanced CMOS : 11000 Series) / SN74ACxx / CD74ACxx
ACT : 74ACT11xxx (Product available in reduced-noise advanced CMOS : 11000 Series) / SN74ACTxx / CD74ACTxx

SHIFT REGISTER

Input Type	Output Type	No. of Bit	CLR	Shift	Output	Device	Technology: Bipolar TTL	Bipolar LS	Bipolar S	Bipolar ALS	Bipolar AS	Bipolar F	CMOS HC	CMOS HCT	BiCMOS BCT	BiCMOS ABT	BiCMOS LVT	BiCMOS ALVT	Advanced CMOS AC	Advanced CMOS ACT	Advanced CMOS AHC	Advanced CMOS AHCT	Advanced CMOS LV	Advanced CMOS LVC	Advanced CMOS ALVC	Advanced CMOS AVC
S/P	S/P	4		R	2S	178	×																			
			C	R	2S	179	×																			
				R	2S	195	×	×	×		×		×/○													
				B	2S	95	×	×			×															
				B	2S	295		×C																		
			C	R	3S	395		×A																		
			C	B	2S	194	×	○A	×		○		×/○	-/○					×/-/-	×/-/-						
		5	C	R	2S	96	×	×																		
			C	R	3S	322		×					×/-													
		8	C	B	2S	198	×																			
			C	B	3S	299		○	×	○	×	○	×/○	-/○	×/-				×/-/○	×/-/○						
			C	B	3S	323		×		○	×	×			×/-				×/-/○	×/-/○						
			C	B	2S	199	×																			
S/P	S	8		R	2S	165	×	○A		○			○/○	-/○									○A			
			C	R	2S	166	×	○A		○		×	○/○	-/○									○A			
S	S/P	8	C	R	2S	164	×	○		○A			○/○	-/○					-/-/○	-/-/○			○A			
S	P	10	C		2S	898													×/-/-	×/-/-						
S	S	8		R	2S	91	×	×																		
P	S	4	C	R	2S	94	×																			
		16		R	3S	674		○																		

SHIFT REGISTER WITH LATCH

Input Type	Output Type	No. of Bit	CLR	Shift	Output	Device	Technology: Bipolar TTL	Bipolar LS	Bipolar S	Bipolar ALS	Bipolar AS	Bipolar F	CMOS HC	CMOS HCT	BiCMOS BCT	BiCMOS ABT	BiCMOS LVT	BiCMOS ALVT	Advanced CMOS AC	Advanced CMOS ACT	Advanced CMOS AHC	Advanced CMOS AHCT	Advanced CMOS LV	Advanced CMOS LVC	Advanced CMOS ALVC	Advanced CMOS AVC
S/P	S/P	4	C	B	3S	671		×																		
		4	C	B	3S	672		×																		
		8	C	R	2S	598		○																		
S	S/P	8	C	R	3S	595		○					○/-								○	○	○A			
		8	C	R	OC	599		×																		
		8	C	R	OC	596		○																		
		8	C	R	2S	594		○					○/-								○	○	○A			
		16	C	B	3S	673		○																		
S/P	S	8	C	R	2S	597		○					-/○	-/○												

Explanatory notes [Input/Output Type] S : Serial P : Parallel S/P : Alternative Serial/Parallel
[CLR] C : With Clear
[Shift] R : Right-Shift B : Alternative Shift Right/Left
[Output] 2S : Totem-Pole Output 3S : 3-State Output

Status ○ : Product available in technology indicated * : New product planned in technology indicated
× : Discontinued ■ : Not recommended for new designs

HC : SN74HCxx / CD74HCxx
HCT : SN74HCxx / CD74HCTxx
BCT : SN74BCTxx / SN64BCTxx
AC : 74AC11xxx (Product available in reduced-noise advanced CMOS : 11000 Series) / SN74ACxx / CD74ACxx
ACT : 74ACT11xxx (Product available in reduced-noise advanced CMOS : 11000 Series) / SN74ACTxx / CD74ACTxx

REGISTER(ETC)

Descriction	Device	Technology																				
		Bipolar						CMOS		BiCMOS				Advanced CMOS								
		TTL	LS	S	ALS	AS	F	HC	HCT	BCT	ABT	LVT	ALVT	AC	ACT	AHC	AHCT	LV	LVC	ALVC	AVC
REGISTER FILES 8WX2B	172	×																			
REGISTER FILES 4WX4B	170	×	×																		
REGISTER FILES 4WX4B	670		○					-/○	-/○												
REGISTER FILES 16WX5B	670				○	×								×/-/-	×/-/-						
REGISTER FILES 16WX5B	858													×/-/-	×/-/-						
REGISTER FILES 16WX6B	871				×	×															
REGISTER FILES 32WX4B	859													×/-/-	×/-/-						
MUX WITH STRAGE	298	×	○			○A		×/-													
MUX WITH STRAGE	398		×																		
4BIT BUS-BUFFER REGISTER	173	×	○A					×/○	-/○												
8BIT STORAGE REGISTER	396		×																		
8BIT DIAGNOTICCS/PIPELINE REGISTER	818													×/-/-	×/-/-						
	819													×/-/-	×/-/-						
	29818				×					×/-											

Status ○ : Product available in technology indicated * : New product planned in technology indicated
× : Discontinued ■ : Not recommended for new designs
HC : SN74HCxx / CD74HCxx
HCT : SN74HCxx / CD74HCTxx
BCT : SN74BCTxx / SN64BCTxx
AC : 74AC11xxx (Product available in reduced-noise advanced CMOS : 11000 Series) / SN74ACxx / CD74ACxx
ACT : 74ACT11xxx (Product available in reduced-noise advanced CMOS : 11000 Series) / SN74ACTxx / CD74ACTxx

MONOSTABLE MULTIVIBRATOR

Curcuit	CLR	Retrigger	Device	Technology																		
				Bipolar						CMOS		BiCMOS				Advanced CMOS						
				TTL	LS	S	ALS	AS	F	HC	HCT	BCT	ABT	LVT	ALVT	AC	ACT	AHC	AHCT	LV	LVC	ALVC	AVC
1			121	○																		
	C	R	122	×	○																	
	C	R	422		×																	
2	C	R	123	○	○					-/○	-/○							○A	○A	○A			
	C		221	○	○					-/○	-/○									○A			
	C	R	423		○					-/○	-/○												
	C	R	4538							-/○	-/○												

Explanatory notes [CLR] C : With Clear
[Retrigger] R : With Retrigger

Status ○ : Product available in technology indicated * : New product planned in technology indicated
× : Discontinued ■ : Not recommended for new designs
HC : SN74HCxx / CD74HCxx
HCT : SN74HCxx / CD74HCTxx
BCT : SN74BCTxx / SN64BCTxx
AC : 74AC11xxx (Product available in reduced-noise advanced CMOS : 11000 Series) / SN74ACxx / CD74ACxx
ACT : 74ACT11xxx (Product available in reduced-noise advanced CMOS : 11000 Series) / SN74ACTxx / CD74ACTxx

DEC						9		90	×	○																					
								290	×	×																					
	A	4			A		D	390	×	○						×/○	-/○													
					A	A		176	×																					
					A	A		196	×	×	×																			
					A	9	D	490	×	×						×														
								560				×																		
	S				S	S		162	×	×A	×	×B	×	×	×/-															
					A	S		160	×	×A		×B	×	×	×/-															
					A	S		690		×																				
					S	S		692		×																				
		4				S		568				×		×																
						S		168			×	×	×	×																
						S		668		×																				
			Y			A		190	×	×		×		×A	×/○															
					A	S		696		×																				
					S	S		698		×																				
					A	A		192	×	×		×				×/○														
		8			A		J	4017								×/○														

BIN					A			69		×																					
								93	×	○						-/○	-/○													
		4						293	×	○																					
	A				A		D	393	×	○						○/○	-/○												○A	
					A	A		177	×																						
					A	A		197	×	×	×																				
		7			A			4024								×/○	-/○													
		12			A			4040								○/○	-/○												○A	
					A			4020								○/○	-/○													
		14			A			4060								○/○	-/○													
					A			4061								×/-														
								561				○A																		
					S	S		163	×	○A	○	○B	○	○A	○/○	-/○													○A	
					S	S		693		×																				
					A	S		161	×	○A		○B	○	○A	○/○	-/○													○A	
					A	S		691		×																				
				D				4518								-/○														
		4				S		669		○																				
					S	S		699		×																				
						S		169		○B	×	○B	○A	○																
			Y			A		191	×	○		○A			○/○	-/○														
					A	S		697		○																				
					A	A		193	×	○		○A		×A	○/○	-/○														
					A	A		569				○A		×																
	S				A	S		461																						
					S	S		463																						
					A	A	R	590		○						○A/-														
					A	A	R	591		×																				
					A	A	R	592		○																				
					A	A	R	593		○																				
		8			A		J	4022								×/-														
								4520								-/○														
					A		J	7022								×/-														
								40103								-/○														
			Y			S		469																						
								579																						
					S	S		869				○	○																	
					A	S		867				○A	○																	
OTH	A	1		12				92	×	○																				

Explanatory notes [DEC·BIN] DEC : Decoder BIN : Binary Counter OHE : Other
[ASYN·SYN] ASYN : Asynchronous SYN : Synchronous
[Up/Down] Y : Up/Down
[CLR] A : With Asynchronous Clear S : With Synchronous Clear
[LOAD] A : With Asynchronous Clear S : With Synchronous Clear 9 : Preset 9
[ETC] D : 2-Curcuit R : With Series Register J : Johnson Counter 12 : Devide By-Twelve Counter

Status ○ : Product available in technology indicated * : New product planned in technology indicated
× : Discontinued ■ : Not recommended for new designs
HC : SN74HCxx / CD74HCxx
HCT : SN74HCxx / CD74HCTxx
BCT : SN74BCTxx / SN64BCTxx
AC : 74AC11xxx (Product available in reduced-noise advanced CMOS : 11000 Series) / SN74ACxx / CD74ACxx
ACT : 74ACT11xxx (Product available in reduced-noise advanced CMOS : 11000 Series) / SN74ACTxx / CD74ACTxx

RATE MULTIPLIER/FREQUENCY DIVIDERS

Description	Device	Technology																				
		Bipolar						CMOS		BiCMOS				Advanced CMOS								
		TTL	LS	S	ALS	AS	F	HC	HCT	BCT	ABT	LVT	ALVT	AC	ACT	AHC	AHCT	LV	LVC	ALVC	AVC
FREQUENCY DIVIDERS	56		×																		
FREQUENCY DIVIDERS	57		×																		
6BIT BINARY RATE MULTIPLIER	97	○																			
DECADE RATE MULTILIER	167	×																			
PROGRAMABLE FREQUENCY DIVIDER/DIGITAL TIMERS	292		○																		
	294		○																		

Status ○ : Product available in technology indicated * : New product planned in technology indicated
× : Discontinued ■ : Not recommended for new designs
HC : SN74HCxx / CD74HCxx
HCT : SN74HCxx / CD74HCTxx
BCT : SN74BCTxx / SN64BCTxx
AC : 74AC11xxx (Product available in reduced-noise advanced CMOS : 11000 Series) / SN74ACxx / CD74ACxx
ACT : 74ACT11xxx (Product available in reduced-noise advanced CMOS : 11000 Series) / SN74ACTxx / CD74ACTxx

DATA SELECTOR/MULTIPLEXER

No. of Input/output	Output	Curcuit	ETC	Device	Technology																		
					Bipolar						CMOS		BiCMOS				Advanced CMOS						
					TTL	LS	S	ALS	AS	F	HC	HCT	BCT	ABT	LVT	ALVT	AC	ACT	AHC	AHCT	LV	LVC	ALVC	AVC
16/1	2S	1		150	○												×/-/-	×/-/-						
	3S	1		250					○A								×/-/-	×/-/-						
	3S	1		850					×															
	3S	1		851					×															
	2S	1		4067							×/○													
8/1	2S	1		151	×A	○	○	○	○	○B	○/○	-/○					×/-/○	×/-/○						
	2S	1		152							×/-													
	3S	1		251	×	○	×	○	×	○B	○/○	-/○					×/-/○	×/-/×						
	3S	1		354		×					×/○	-/○												
	3S	1		356		×					×/-	-/○												
	3S	1		4051							-/○	-/○									○A			
	3S	1		4351							-/○	-/○												
	OC	1		355		×																		
	OC	1		357		×																		
4/1	2S	2		352		×		×	×	×	×/-						×/-/-	×/-/-						
	3S	2		153	×	○	×	○	○	○	○/○	-/○					×/-/○	×/-/○						
	3S	2		253		○		○	○A	○	○/○	-/○					×/-/○	×/-/○						
	3S	2		353		×		×	×	×	×/-						×/-/-	×/-/-						
	3S	2		4052							-/○	-/○									○A			
	3S	2		4352							-/○													
	3S	4		16460										H○									×	
	3S	4		162460										H○										
2/1	2S	1		157	×	○	○	○A	○	○A	○/○	○/○					×/-/○	×/-/○	○	○	○A	○A		
	2S	1		158		○	×	○	○	×A	○/○	-/○					×/-/○	×/-/○	○	○		-		
	2S	4	S	399		○																		
	3S	1		257		○B	○	○A	○	○	○/○	○/○					○/-/○	○/-/○				○A		
	3S	1		258		○B	×	○A	○	○	○/○	-/○					×/-/-	×/-/○				-		
	3S	4		4053							-/○	-/○									○A			
	3S	6	U	857				○	×															
	3S	8	S	604		×					×													
	OC	8	S	605		×																		
	3S	8	S	606		×																		
	OC	8	S	607		×																		
16	3S	16	AD	16254														×						

Explanatory notes [Output] 2S : Totem pole Output 3S : 3-State Output OC : Open-Collector Output
[ETC] S : Storage Register

Status ○ : Product available in technology indicated * : New product planned in technology indicated
× : Discontinued ■ : Not recommended for new designs
HC : SN74HCxx / CD74HCxx
HCT : SN74HCxx / CD74HCTxx
BCT : SN74BCTxx / SN64BCTxx
AC : 74AC11xxx (Product available in reduced-noise advanced CMOS : 11000 Series) / SN74ACxx / CD74ACxx
ACT : 74ACT11xxx (Product available in reduced-noise advanced CMOS : 11000 Series) / SN74ACTxx / CD74ACTxx

DECODER/DEMULTIPLEXER

No. of Input/output	Output	Curcuit	ETC	Device	Technology: Bipolar TTL	Bipolar LS	Bipolar S	Bipolar ALS	Bipolar AS	Bipolar F	CMOS HC	CMOS HCT	BiCMOS BCT	BiCMOS ABT	BiCMOS LVT	BiCMOS ALVT	Advanced CMOS AC	Advanced CMOS ACT	Advanced CMOS AHC	Advanced CMOS AHCT	Advanced CMOS LV	Advanced CMOS LVC	Advanced CMOS ALVC	Advanced CMOS AVC
4/16	2S	1	AD	4514							×/○	-/○												
	2S	1	AD	4515							×/○	-/○												
	3S	1		154	○						×/○	-/○					×/-/-	×/-/-						
	OC	1		159	○																			
4/10	2S	1	BD	42	×A	○					○/○	-/○												
	2S	1	BD	43	×																			
	2S	1	BD	44	×																			
3/8	2S	1		238							×/○	-/○					×/-/○	×/-/○						
	2S	1		138		○	○A	○A	○	○	○/○	○/○					○/-/○	×/-/○	○	○	○A	○A		
	2S	1	AD	237							×/○	-/○												
	2S	1	AD	137		×		○A	×		×/○	×/○												
	2S	1	AD	131				×	×															
2/4	2S	2		139		○A	○A	○	×	×	○/○	○/○					×/-/○	○/-/○	○	○	○A	○A		
	2S	2		239							×/-						×/-/-	×/-/-						
	2S	2		155	×	○A																		
	OC	2		156	×	○		○																

Explanatory notes [Output] 2S : Totem pole Output 3S : 3-State Output OC : Open-Collector Output
[ETC] AD : Adress Latch BD : BCD TO DECIMAL

Status ○ : Product available in technology indicated * : New product planned in technology indicated
× : Discontinued ■ : Not recommended for new designs
HC : SN74HCxx / CD74HCxx
HCT : SN74HCxx / CD74HCTxx
BCT : SN74BCTxx / SN64BCTxx
AC : 74AC11xxx (Product available in reduced-noise advanced CMOS : 11000 Series) / SN74ACxx / CD74ACxx
ACT : 74ACT11xxx (Product available in reduced-noise advanced CMOS : 11000 Series) / SN74ACTxx / CD74ACTxx

CODE CONVERTER、 PRIORITY ENCODER／REGISTER

Descriotion	Device	Technology: Bipolar TTL	Bipolar LS	Bipolar S	Bipolar ALS	Bipolar AS	Bipolar F	CMOS HC	CMOS HCT	BiCMOS BCT	BiCMOS ABT	BiCMOS LVT	BiCMOS ALVT	Advanced CMOS AC	Advanced CMOS ACT	Advanced CMOS AHC	Advanced CMOS AHCT	Advanced CMOS LV	Advanced CMOS LVC	Advanced CMOS ALVC	Advanced CMOS AVC
CODE CONVERTER	184	×																			
CODE CONVERTER	185	×																			
10-4 PRIORITY ENCODER	147	×	×					-/○	-/○												
8-3 PRIORITY ENCODER	148	×	○				×	○/-													
8-3 PRIORITY ENCODER	348		○									×									
4BIT CASCADABLE PRIORITY REGISTER	278	×																			

Status ○ : Product available in technology indicated * : New product planned in technology indicated
× : Discontinued ■ : Not recommended for new designs
HC : SN74HCxx / CD74HCxx
HCT : SN74HCxx / CD74HCTxx
BCT : SN74BCTxx / SN64BCTxx
AC : 74AC11xxx (Product available in reduced-noise advanced CMOS : 11000 Series) / SN74ACxx / CD74ACxx
ACT : 74ACT11xxx (Product available in reduced-noise advanced CMOS : 11000 Series) / SN74ACTxx / CD74ACTxx

Display Decoder/Driver

Function	V_{OH} (V)	Device	Technology																				
			Bipolar						CMOS		BiCMOS				Advanced CMOS								
			TTL	LS	S	ALS	AS	F	HC	HCT	BCT	ABT	LVT	ALVT	AC	ACT	AHC	AHCT	LV	LVC	ALVC	AVC
D	30	45	○																				
D	60	141	×																				
D	15	145	○	○																			
D	7	445		×																			
7	30	46	×																				
7	15	47	○A	○																			
7	5.5	48	×	×																			
7	5.5	49		×																			
7	30	246	×																				
7	15	247	×	○																			
7	7	347																					
7	7	447																					
7	5.5	248		×																			
7	5.5	249		×																			
B	7	142	×																				
B	7	143	×																				
B	7	144	×																				

Explanatory notes [Function] D : BCD TO DECIMAL. 7 : BCD TO 7-SEGMENT. B : COUNTER/LATCH/DECODER/DRIVER
[V_{OH}] Off-Stage Output Voltage(V)

Status ○ : Product available in technology indicated * : New product planned in technology indicated
× : Discontinued ■ : Not recommended for new designs
HC : SN74HCxx / CD74HCxx
HCT : SN74HCxx / CD74HCTxx
BCT : SN74BCTxx / SN64BCTxx
AC : 74AC11xxx (Product available in reduced-noise advanced CMOS : 11000 Series) / SN74ACxx / CD74ACxx
ACT : 74ACT11xxx (Product available in reduced-noise advanced CMOS : 11000 Series) / SN74ACTxx / CD74ACTxx

COMPARATOR

No. of Bit	Input	P=Q	P≠Q	P>Q	P<Q	Output	Device	Technology																
								Bipolar						CMOS		BiCMOS				Advanced CMOS							
								TTL	LS	S	ALS	AS	F	HC	HCT	BCT	ABT	LVT	ALVT	AC	ACT	AHC	AHCT	LV	LVC	ALVC	AVC
4	S	Y	N	Y	Y	2S	85	×	○	○		×		×A/○	-/○												
6	S	N	Y	N	N	2S	29806				×																
6	20	Y	N	N	N	OC	518				○		×														
8	20	N	Y	N	N	2S	520				○		×							×/-/-	×/-/-						
8	20	N	Y	N	N	OC	522				×																
8	20	N	Y	Y	N	2S	682		○					○/-													
8	20	N	Y	Y	N	OC	683		×																		
8	S	Y	N	N	N	OC	519				×		×														
8	S	N	Y	N	N	2S	521				○		○							×/-/-	×/-/-						
8	S	N	Y	Y	N	2S	684		○					○/-													
8	S	N	Y	Y	N	OC	685		×																		
8	S	N	Y	Y	N	2S	686		×																		
8	S	N	Y	Y	N	OC	687		×																		
8	S	N	Y	N	N	2S	688		○		○			○/○	-/○												
8	S	N	Y	N	N	OC	689		×		×																
8	S	Y	N	Y	Y	2S	860													×/-/-	×/-/-						
8	S	N	N	Y	Y	2S	865													×/-/-	×/-/-						
8	LP	N	N	Y	Y	2S	885					○								×/-/-	×/-/-						
8	LPQ	Y	N	Y	Y	OC	866					×A															
9	-	N	Y	N	N	2S	29809				×																

Explanatory notes [Input] S : Standard 20 : 20-kW Pullup Resistors LP : P-Port Latch LPQ : L,P-port Latch
[P=Q, P=Q̄, P>Q, P<Q] Y : Yes N : No
[Output] 2S : Totem Pole Output. OC : Open-Collector Output

Status ○ : Product available in technology indicated * : New product planned in technology indicated
× : Discontinued ■ : Not recommended for new designs
HC : SN74HCxx / CD74HCxx
HCT : SN74HCxx / CD74HCTxx
BCT : SN74BCTxx / SN64BCTxx
AC : 74AC11xxx (Product available in reduced-noise advanced CMOS : 11000 Series) / SN74ACxx / CD74ACxx
ACT : 74ACT11xxx (Product available in reduced-noise advanced CMOS : 11000 Series) / SN74ACTxx / CD74ACTxx

ADRESS COMPARATOR 、FUSE-PROGRAMMABLE IDENTITY COMPARATOR

				Technology																											
				Bipolar						CMOS		BiCMOS				Advanced CMOS															

Explanatory notes [Function] A : Adress Comparator F : Fuse-Programmable Identity Comparators
[ETC] OE : Output-With Enable L : Output-With Latch

Status ○ : Product available in technology indicated * : New product planned in technology indicated
× : Discontinued ■ : Not recommended for new designs
HC : SN74HCxx / CD74HCxx
HCT : SN74HCxx / CD74HCTxx
BCT : SN74BCTxx / SN64BCTxx
AC : 74AC11xxx (Product available in reduced-noise advanced CMOS : 11000 Series) / SN74ACxx / CD74ACxx
ACT : 74ACT11xxx (Product available in reduced-noise advanced CMOS : 11000 Series) / SN74ACTxx / CD74ACTxx

PARITY GENERATOR／CHECKER

No. of Bit	Device	Technology																													
		Bipolar						CMOS		BiCMOS				Advanced CMOS																	
		TTL	LS	S	ALS	AS	F	HC	HCT	BCT	ABT	LVT	ALVT	AC	ACT	AHC	AHCT	LV	LVC	ALVC	AVC										
8	180	×						×																							
9	280		○	○	○	○	○B	×/○	-/○					×/-/○	×/-/○																
9	286					○	×							×/-/-	○/-/-																

Status ○ : Product available in technology indicated * : New product planned in technology indicated
× : Discontinued ■ : Not recommended for new designs
HC : SN74HCxx / CD74HCxx
HCT : SN74HCxx / CD74HCTxx
BCT : SN74BCTxx / SN64BCTxx
AC : 74AC11xxx (Product available in reduced-noise advanced CMOS : 11000 Series) / SN74ACxx / CD74ACxx
ACT : 74ACT11xxx (Product available in reduced-noise advanced CMOS : 11000 Series) / SN74ACTxx / CD74ACTxx

VOLTAGE CONTROLLED OSCILLATOR(VCO)

Curcuit	Fmax (MHz)	COMP'L Z OUT	ENABLE	RANGE INPUT	Rext	PLL	Device	Technology																							
								Bipolar						CMOS		BiCMOS				Advanced CMOS											
								TTL	LS	S	ALS	AS	F	HC	HCT	BCT	ABT	LVT	ALVT	AC	ACT	AHC	AHCT	LV	LVC	ALVC	AVC				
1	20	Y	Y	Y			624		○																						
	20	Y	Y	Y	Y		628		○																						
	24				Y	Y	7046							-/○	-/○																
2	20						627		×																						
	20		Y	Y			629		○																						
	20	Y					625		×																						
	20	Y	Y				626		×																						
	60		Y	Y			124			○																					
	24				Y	Y	4046							-/○																	

Status ○ : Product available in technology indicated * : New product planned in technology indicated
× : Discontinued ■ : Not recommended for new designs
HC : SN74HCxx / CD74HCxx
HCT : SN74HCxx / CD74HCTxx
BCT : SN74BCTxx / SN64BCTxx
AC : 74AC11xxx (Product available in reduced-noise advanced CMOS : 11000 Series) / SN74ACxx / CD74ACxx
ACT : 74ACT11xxx (Product available in reduced-noise advanced CMOS : 11000 Series) / SN74ACTxx / CD74ACTxx

ACCUMULATORS, ARITHMETIC LOGIC UNIT(ALU), LOOK-AHEAD CARRY GENERATOR

Descriction	Device	Technology																			
		Bipolar						CMOS		BiCMOS				Advanced CMOS							
		TTL	LS	S	ALS	AS	F	HC	HCT	BCT	ABT	LVT	ALVT	AC	ACT	AHC	AHCT	LV	LVC	ALVC	AVC
4BIT PARALLEL BINARY ACCUMULATORS	281			×																	
4BIT PARALLEL BINARY ACCUMULATORS	681		×																		
4BIT ALU/FUNCTION GENERATORS	181	×	○	×		○A								×/-/-	×/-/-						
4BIT ALU/FUNCTION GENERATORS	381		×	×			×														
4BIT ALU/FUNCTION GENERATORS	881					×A								×/-/-	×/-/-						
4BIT ALU WITH RIPPLE CARRY	382		×				×														
LOOK AHEAD CARRY GENERATORS	264					×															
LOOK AHEAD CARRY GENERATORS	182	×		○		×															
LOOK AHEAD CARRY GENERATORS	282					×															
LOOK AHEAD CARRY GENERATORS	882					×A								×/-/-	×/-/-						
QUAD SERIAL ADDER/SUBTRACTOR	385		×																		

Status ○ : Product available in technology indicated * : New product planned in technology indicated
× : Discontinued ■ : Not recommended for new designs
HC : SN74HCxx / CD74HCxx
HCT : SN74HCxx / CD74HCTxx
BCT : SN74BCTxx / SN64BCTxx
AC : 74AC11xxx (Product available in reduced-noise advanced CMOS : 11000 Series) / SN74ACxx / CD74ACxx
ACT : 74ACT11xxx (Product available in reduced-noise advanced CMOS : 11000 Series) / SN74ACTxx / CD74ACTxx

ADDER

Descriction	Device	Technology																			
		Bipolar						CMOS		BiCMOS				Advanced CMOS							
		TTL	LS	S	ALS	AS	F	HC	HCT	BCT	ABT	LVT	ALVT	AC	ACT	AHC	AHCT	LV	LVC	ALVC	AVC
4BIT BINARY FULL ADDER	83	×	×																		
4BIT BINARY FULL ADDER	283	×	○	○			○	-/○	-/○					-/-/○	-/-/○						
DUAL CARRY SAVE FULL ADDER	183		×																		
GATED FULL ADDER	80	×																			
2BIT BINARY FULL ADDER	82	×																			

Status ○ : Product available in technology indicated * : New product planned in technology indicated
× : Discontinued ■ : Not recommended for new designs
HC : SN74HCxx / CD74HCxx
HCT : SN74HCxx / CD74HCTxx
BCT : SN74BCTxx / SN64BCTxx
AC : 74AC11xxx (Product available in reduced-noise advanced CMOS : 11000 Series) / SN74ACxx / CD74ACxx
ACT : 74ACT11xxx (Product available in reduced-noise advanced CMOS : 11000 Series) / SN74ACTxx / CD74ACTxx

MULTIPLIER

Descriction	Device	Technology																			
		Bipolar						CMOS		BiCMOS				Advanced CMOS							
		TTL	LS	S	ALS	AS	F	HC	HCT	BCT	ABT	LVT	ALVT	AC	ACT	AHC	AHCT	LV	LVC	ALVC	AVC
2-4 PARALLEL BINARY MULTIPLIERS	261		×																		
4-4 PARALLEL BINARY MULTIPLIERS	284	×																			
4-4 PARALLEL BINARY MULTIPLIERS	285	×																			
2'S COMPLEMENT MULTIPLIERS	384		×																		

Status ○ : Product available in technology indicated * : New product planned in technology indicated
× : Discontinued ■ : Not recommended for new designs
HC : SN74HCxx / CD74HCxx
HCT : SN74HCxx / CD74HCTxx
BCT : SN74BCTxx / SN64BCTxx
AC : 74AC11xxx (Product available in reduced-noise advanced CMOS : 11000 Series) / SN74ACxx / CD74ACxx
ACT : 74ACT11xxx (Product available in reduced-noise advanced CMOS : 11000 Series) / SN74ACTxx / CD74ACTxx

MEMORY

Description	Device	Technology																				
		Bipolar						CMOS		BiCMOS				Advanced CMOS								
		TTL	LS	S	ALS	AS	F	HC	HCT	BCT	ABT	LVT	ALVT	AC	ACT	AHC	AHCT	LV	LVC	ALVC	AVC
MEMORY REFRESH CONTROLLERS	600		×																		
MEMORY REFRESH CONTROLLERS	601		×																		
MEMORY REFRESH CONTROLLERS	603		×																		
MEMORY CYCLE CONTROLLER	608		×																		
MEMMORY MAPPERS	612		×																		
MEMMORY MAPPERS	613		×																		
MEMMORY MAPPERS WITH LATCH	610		×																		
MEMMORY MAPPERS WITH LATCH	611		×																		
MULTI-MODE LATCH	412			×																	
3-8 MEMORY DECIDER	2414									○/-											

Status ○ : Product available in technology indicated * : New product planned in technology indicated
× : Discontinued ■ : Not recommended for new designs
HC : SN74HCxx / CD74HCxx
HCT : SN74HCxx / CD74HCTxx
BCT : SN74BCTxx / SN64BCTxx
AC : 74AC11xxx (Product available in reduced-noise advanced CMOS : 11000 Series) / SN74ACxx / CD74ACxx
ACT : 74ACT11xxx (Product available in reduced-noise advanced CMOS : 11000 Series) / SN74ACTxx / CD74ACTxx

CLOCK GENERATOR CIRCUIT

Description	Device	Technology																				
		Bipolar						CMOS		BiCMOS				Advanced CMOS								
		TTL	LS	S	ALS	AS	F	HC	HCT	BCT	ABT	LVT	ALVT	AC	ACT	AHC	AHCT	LV	LVC	ALVC	AVC
QUAD COMPLEMENTARY-OUTPUT LOGIC	265	×																			
DUAL PULSE SYNCHRONIZERS/DRIVERS	120	×																			
CRYSTAL-CONTOROLLED OSCILLATORS	320		×																		
CRYSTAL-CONTOROLLED OSCILLATORS	321		×																		
DIGITAL PHASE-LOCK LOOP	297		○					-/○	-/○						-/-/○						

Status ○ : Product available in technology indicated * : New product planned in technology indicated
× : Discontinued ■ : Not recommended for new designs
HC : SN74HCxx / CD74HCxx
HCT : SN74HCxx / CD74HCTxx
BCT : SN74BCTxx / SN64BCTxx
AC : 74AC11xxx (Product available in reduced-noise advanced CMOS : 11000 Series) / SN74ACxx / CD74ACxx
ACT : 74ACT11xxx (Product available in reduced-noise advanced CMOS : 11000 Series) / SN74ACTxx / CD74ACTxx

SWITCH , SHIFTER , ERROR DETECTION CORRECTION CIRCUIT , HARD DISK DRIVER

Description	Device	Technology																				
		Bipolar						CMOS		BiCMOS				Advanced CMOS								
		TTL	LS	S	ALS	AS	F	HC	HCT	BCT	ABT	LVT	ALVT	AC	ACT	AHC	AHCT	LV	LVC	ALVC	AVC
QUAD BILATERAL SWITCHES	4016							-/○										○A			
	4066							○/○	-/○												
ANALOG SWITCHES WITH LEVEL TRANSLATION	4316							-/○	-/○												
4BIT SHIFTERS	350			×			×														
8BIT PARALLEL ERROR DETECTION CORRECTION CIRCUIT	636		×																		
	637		×																		
16BIT PARALLEL ERROR DETECTION CORRECTION CIRCUIT	616				×																
	617																				
	630		×																		
	631		×																		
32BIT PARALLEL ERROR DETECTION CORRECTION CIRCUIT	632				×	×															
	633				×																
	634				×	×															
	635				×																
HARD DISK DRIVER	1250				×																

Status ○ : Product available in technology indicated * : New product planned in technology indicated
× : Discontinued ■ : Not recommended for new designs
HC : SN74HCxx / CD74HCxx
HCT : SN74HCxx / CD74HCTxx
BCT : SN74BCTxx / SN64BCTxx
AC : 74AC11xxx (Product available in reduced-noise advanced CMOS : 11000 Series) / SN74ACxx / CD74ACxx
ACT : 74ACT11xxx (Product available in reduced-noise advanced CMOS : 11000 Series) / SN74ACTxx / CD74ACTxx

PIN ASSIGNMENTS

PIN ASSIGNMENTS

Pin Assignments

00
QUADRUPLE 2-INPUT POSITIVE-NAND GATES

positive logic:

$Y = \overline{A \cdot B}$

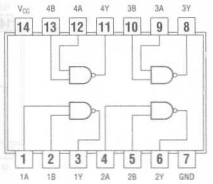

See page 139

01
QUADRUPLE 2-INPUT POSITIVE-NAND GATES WITH OPEN-COLLECTOR OUTPUTS

positive logic:

$Y = \overline{A \cdot B}$

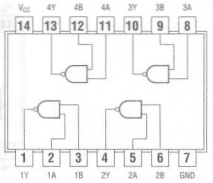

See page 140

02
QUADRUPLE 2-INPUT POSITIVE-NOR GATES

positive logic:

$Y = \overline{A + B}$

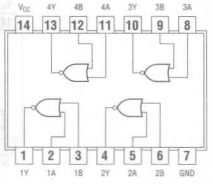

See page 141

03
QUADRUPLE 2-INPUT POSITIVE-NAND GATES WITH OPEN-COLLECTOR OUTPUTS

positive logic:

$Y = \overline{A \cdot B}$

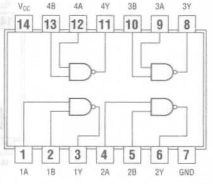

See page 142

04
HEX INVERTERS

positive logic:

$Y = \overline{A}$

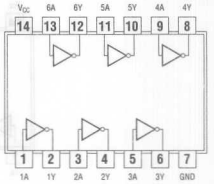

See page 143

U04
HEX INVERTERS

positive logic:

$Y = \overline{A}$

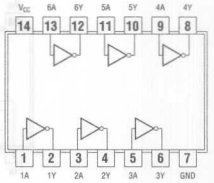

See page 144

05
HEX INVERTERS WITH OPEN-COLLECTOR OUTPUTS

positive logic:

$Y = \overline{A}$

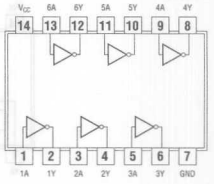

See page 144

06
HEX INVERTER BUFFERS/DRIVERS WITH OPEN-COLLECTOR HIGH-VOLTAGE OUTPUTS

positive logic:

$Y = \overline{A}$

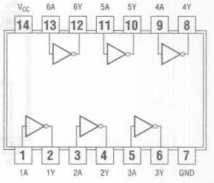

See page 145

Pin Assignments

07
HEX BUFFERS/DRIVERS WITH OPEN-COLLECTOR HIGH-VOLTAGE OUTPUTS

positive logic:

$Y = \overline{A}$

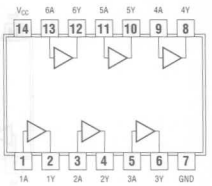

See page 145

08
QUADRUPLE 2-INPUT POSITIVE-AND GATES

positive logic:

$Y = A \bullet B$

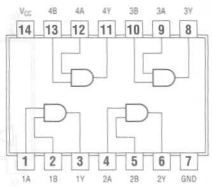

See page 146

09
QUADRUPLE 2-INPUT POSITIVE-AND GATES WITH OPEN-COLLECTOR OUTPUTS

positive logic:

$Y = A \bullet B$

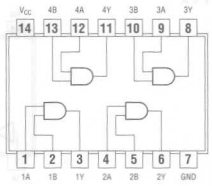

See page 147

10
TRIPLE 3-INPUT POSITIVE-NAND GATES

positive logic:

$Y = \overline{A \bullet B \bullet C}$

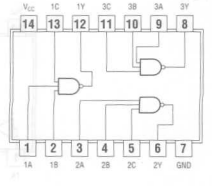

See page 148

11
TRIPLE 3-INPUT POSITIVE-AND GATES

positive logic:

$Y = A \bullet B \bullet C$

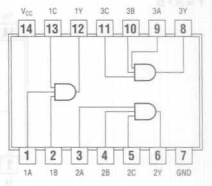

See page 149

14
HEX SCHMITT-TRIGGER INVERTERS

positive logic:

$Y = \overline{A}$

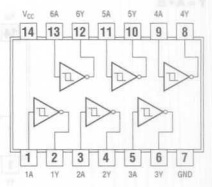

See page 150

16
HEX INVERTER BUFFERS/DRIVERS WITH OPEN-COLLECTOR HIGH-VOLTAGE OUTPUTS

positive logic:

$Y = \overline{A}$

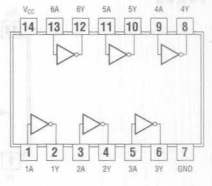

See page 151

17
HEX BUFFERS/DRIVERS WITH OPEN-COLLECTOR HIGH-VOLTAGE OUTPUTS

positive logic:

$Y = A$

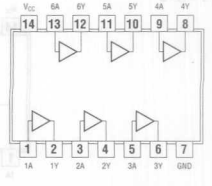

See page 151

Pin Assignments

19
HEX SCHMITT-TRIGGER INVERTERS

positive logic:

$Y = \overline{A}$

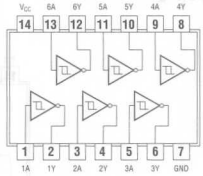

See page 152

20
DUAL 4-INPUT POSITIVE-NAND GATES

positive logic:

$Y = \overline{A \bullet B \bullet C \bullet D}$

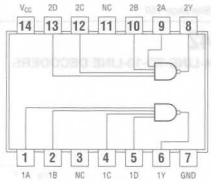

NC – No internal connection

See page 153

21
DUAL 4-INPUT POSITIVE-AND GATES

positive logic:

$Y = A \bullet B \bullet C \bullet D$

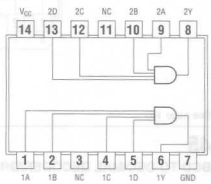

NC – No internal connection

See page 154

25
DUAL 4-INPUT POSITIVE-NOR GATES WITH STROBE

positive logic:

$Y = G(\overline{A + B + C + D})$

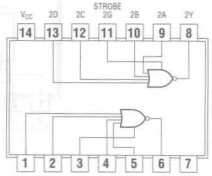

See page 154

26
QUADRUPLE 2-INPUT HIGH-VOLTAGE INTERFACE POSITIVE-NAND GATES

positive logic:

$Y = \overline{AB}$

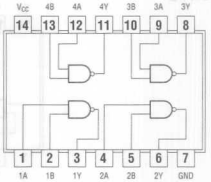

See page 155

27
TRIPLE 3-INPUT POSITIVE-NOR GATES

positive logic:

$Y = \overline{A + B + C}$

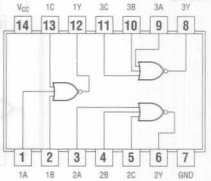

See page 155

30
8-INPUT POSITIVE-NAND GATES

positive logic:

$Y = \overline{A \bullet B \bullet C \bullet D \bullet E \bullet F \bullet G \bullet H}$

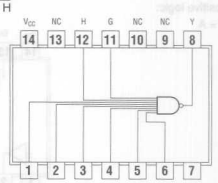

NC – No internal connection

See page 156

31
DELAY ELEMENTS

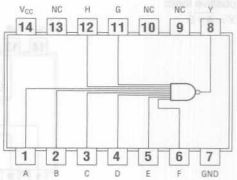

NC – No internal connection

See page 156

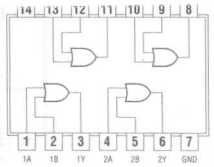

See page 157

33

QUADRUPLE 2-INPUT POSITIVE-NOR BUFFERS WITH OPEN-COLLECTOR OUTPUTS

positive logic:

$Y = \overline{A + B}$

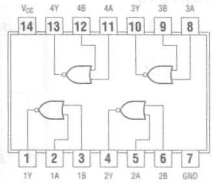

See page 158

35

HEX NONINVERTERS WITH OPEN-COLLECTOR OUTPUTS

positive logic:

$Y = A$

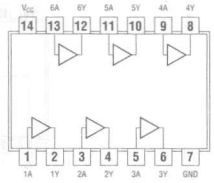

See page 158

37

QUADRUPLE 2-INPUT POSITIVE-NAND BUFFERS

positive logic:

$Y = \overline{A \cdot B}$

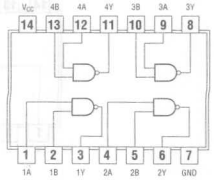

See page 159

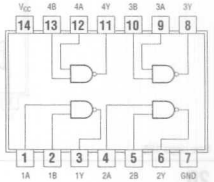

See page 159

42

4-LINE-TO-10-LINE DECODERS

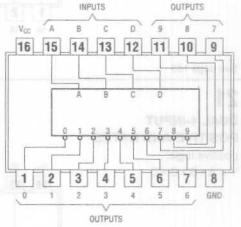

See page 160

45

BCD-TO-DECIMAL DECODER/DRIVER

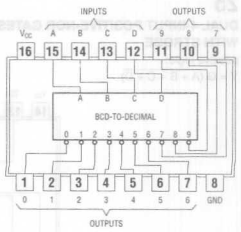

See page 162

47
BCD-TO-SEVEN-SEGMENT DECODERS/DRIVERS

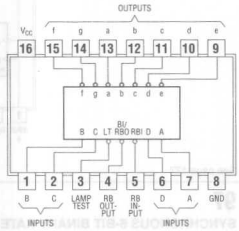

See page 164

51
AND-OR-INVERT GATES

'51, 'S51 DUAL 2-WIDE 2-INPUT

positive logic:

$Y = \overline{AB + CD}$

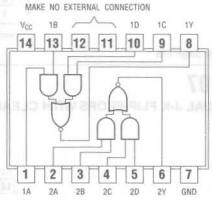

AND-OR-INVERT GATES

'LS51 2-WIDE 3-INPUT, 2-WIDE 2-INPUT

positive logic:

$1Y = \overline{(1A \cdot 1B \cdot 1C) + (1D \cdot 1E \cdot 1F)}$

$2Y = \overline{(2A \cdot 2B) + (2C \cdot 2D)}$

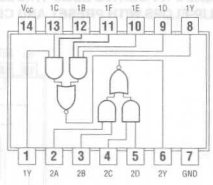

See page 166

64
4-2-3-2 INPUT AND-OR INVERT GATE

positive logic:

$Y = \overline{ABCD + EF + GHI + JK}$

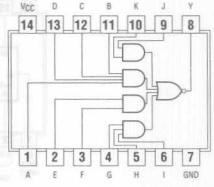

See page 167

73
DUAL J-K FLIP-FLOPS WITH CLEAR

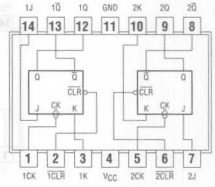

See page 168

74
DUAL D-TYPE POSITIVE-EDGE-TRIGGERED FLIP-FLOPS WITH PRESET AND CLEAR

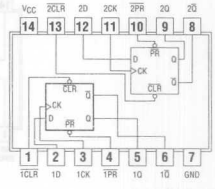

See page 170

75
4-BIT BISTABLE LATCHES

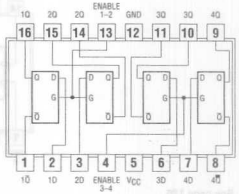

See page 172

Pin Assignments

85
4-BIT MAGNITUDE COMPARATORS

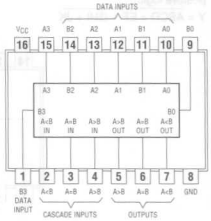

See page 173

86
QUADRUPLE 2-INPUT EXCLUSIVE-OR GATES

positive logic:

$Y = A \oplus B$ or $Y = \overline{A}B + A\overline{B}$

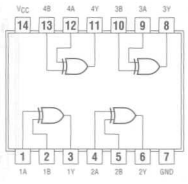

See page 174

90
DECADE COUNTER

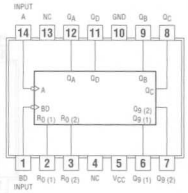

NC – No internal connection

See page 175

92
DIVIDE-BY-TWELVE COUNTERS

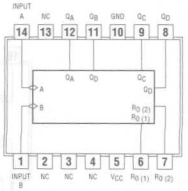

NC – No internal connection

See page 176

93
4-BIT BINARY COUNTERS

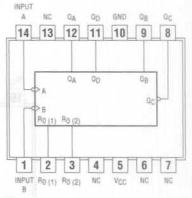

NC – No internal connection

See page 177

97
SYNCHRONOUS 6-BIT BINARY RATE MULTIPLIER

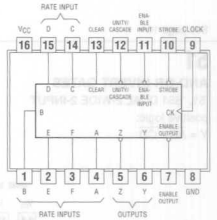

See page 178

107
DUAL J-K FLIP-FLOPS WITH CLEAR

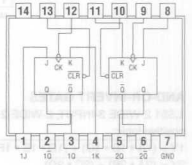

See page 180

109
DUAL J-$\overline{K}$ POSITIVE-EDGE-TRIGGERED FLIP-FLOPS WITH PRESET AND CLEAR

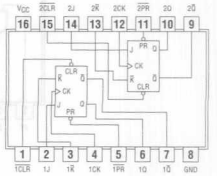

See page 182

112

DUAL J-K NEGATIVE-EDGE-TRIGGERED FLIP-FLOPS WITH PRESET AND CLEAR

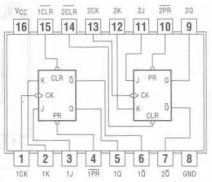

See page 184

121

MONOSTABLE MULTIVIBRATOR

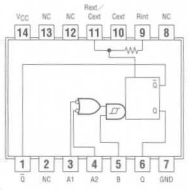

NC – No internal connection

See page 186

122

RETRIGGERABLE MONOSTABLE MULTIVIBRATORS WITH CLEAR

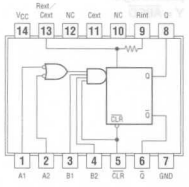

NC – No internal connection

See page 187

123

DUAL RETRIGGERABLE MONOSTABLE MULTIVIBARATORS WITH CLEAR

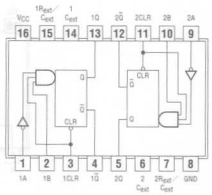

See page 188

124

DUAL VOLTAGE-CONTROLLED OSCILLATORS WITH ENABLE INPUTS

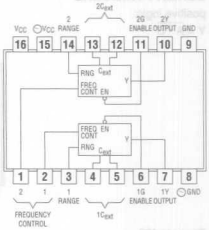

See page 189

125

QUADRUPLE BUS BUFFER GATES WITH THREE-STATE OUTPUTS

positive logic:

Y = A

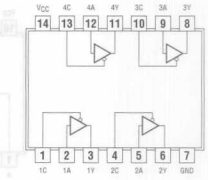

See page 190

126

QUADRUPLE BUS BUFFER GATES WITH THREE-STATE OUTPUTS

positive logic:

Y = A

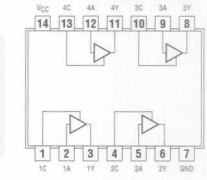

See page 191

128

SN54128...75-Ω LINE DRIVER
SN74128...50-Ω LINE DRIVER

positive logic:

$Y = \overline{A + B}$

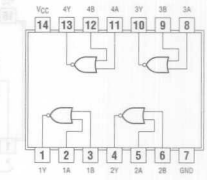

See page 192

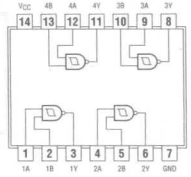

See page 192

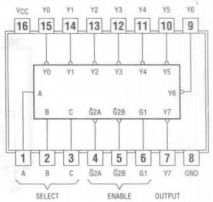

See page 196

133

13-INPUT POSITIVE-NAND GATES

positive logic:

$Y = \overline{A \cdot B \cdot C \cdot D \cdot E \cdot F \cdot G \cdot H \cdot I \cdot J \cdot K \cdot L \cdot M}$

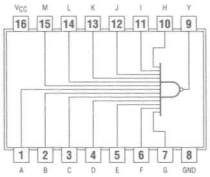

See page 193

136

QUAD 2-INPUT EXCLUSIVE-OR GATES WITH OPEN COLLECTOR OUTPUTS

positive logic:

$Y = A \oplus B = \overline{A}B + A\overline{B}$

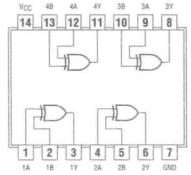

See page 193

137

3-TO 8-LINE DECODERS/DEMULTIPLEXERS WITH ADDRESS LATCHES

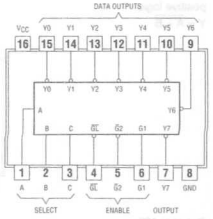

See page 194

139

DUAL 2-TO-4-LINE DECODERS/DEMULTIPLEXERS

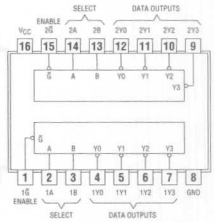

See page 198

140

DUAL 4-INPUT POSITIVE-NAND 50-Ω LINE DRIVERS

positive logic:

$Y = \overline{ABCD}$

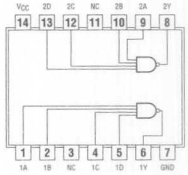

NC – No internal connection

See page 200

145

BCD-TO-DECIMAL DECODERS/DRIVERS FOR LAMPS, RELAYS, MOS

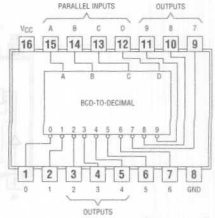

See page 201

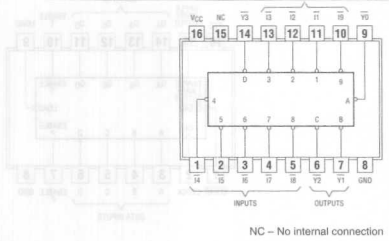

NC – No internal connection

See page 202

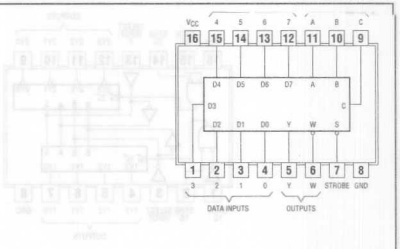

See page 208

148

8-TO-3-LINE OCTAL PRIORITY ENCODERS

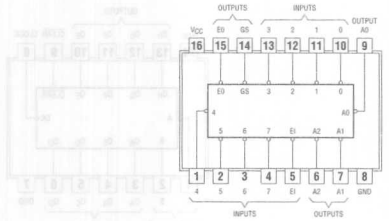

See page 204

153

DUAL 4-LINE TO 1-LINE DATA SELECTORS/MULTIPLEXERS

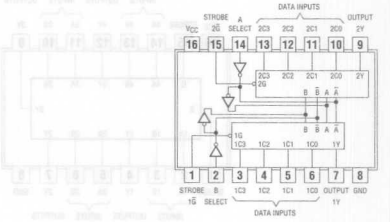

See page 210

150

1-OF-16 DATA SELECTOR

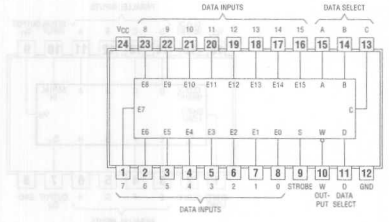

See page 206

154

4-LINE TO 16-LINE DECODER/DEMULTIPLEXER

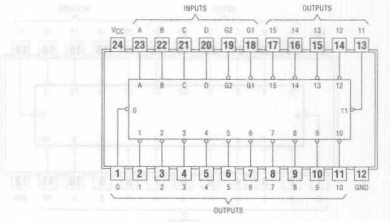

See page 212

155
156
DECODERS/DEMULTIPLEXERS

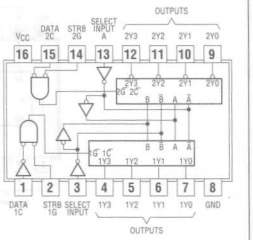

See page 214, 216

157
158
QUAD 2-TO 1-LINE DATA SELECTORS/MULTIPLEXERS

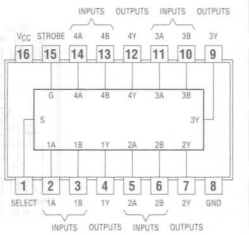

See page 218, 220

159
4-TO-16 LINE DECODER/DEMULTIPLEXER

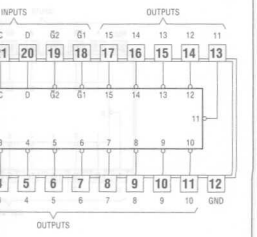

See page 222

161
163
SYNCHRONOUS 4-BIT BINARY COUNTERS

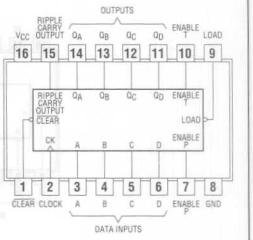

See page 224, 226

164
8-BIT PARALLEL OUTPUT SERIAL SHIFT REGISTERS

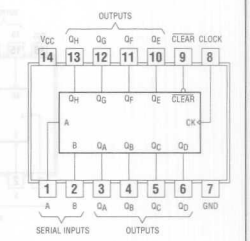

See page 228

165
8-BIT SHFT REGISTERS

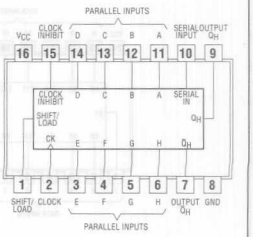

See page 230

166
8-BIT SHIFT REGISTERS

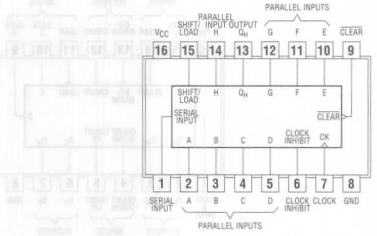

See page 232

169
4-BIT UP/DOWN SYNCHRONOUS BINARY COUNTERS

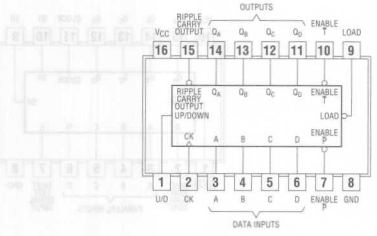

See page 234

170
4-BY-4-REGISTER FILES

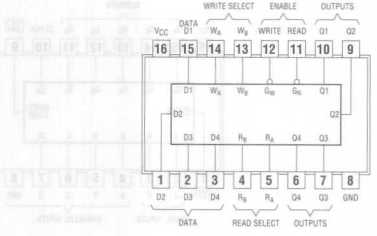

See page 236

173
4-BIT D-TYPE REGISTERS

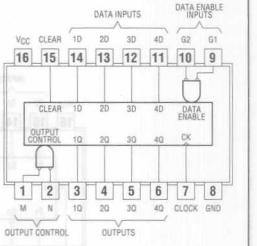

See page 238

174
HEX D-TYPE FLIP-FLOPS

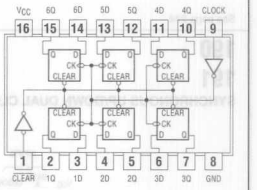

See page 240

175
QUAD D-TYPE FLIP-FLOPS

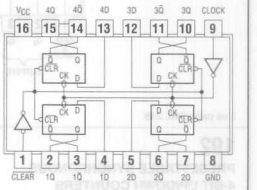

See page 241

181
ARITHMETIC LOGIC UNITS/FUNCTION GENERATORS

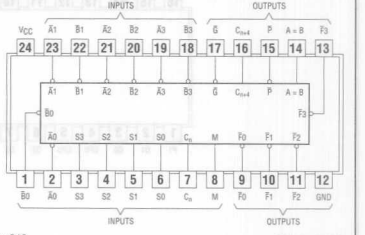

See page 242

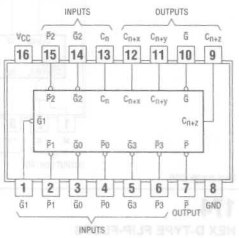

See page 244

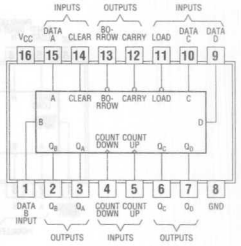

See page 252

190
191
SYNCHRONOUS UP/DOWN DUAL CLOCK COUNTERS

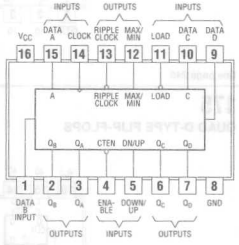

See page 246, 248

192
PRESETTABLE SYNCHRONOUS 4-BIT UP/DOWN COUNTERS

See page 250

194
4-BIT BIDIRECTIONAL UNIVERSAL SHIFT REGISTERS

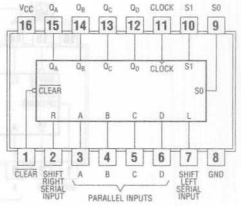

See page 254

195
4-BIT PARALLEL-ACCESS SHIFT REGISTERS

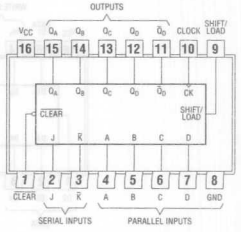

See page 256

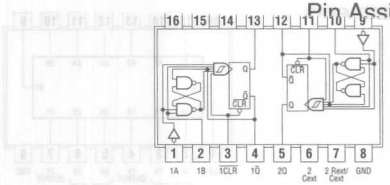

See page 258

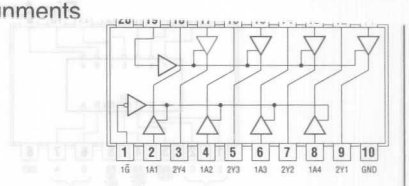

See page 266

237

3-TO-8 LINE DECODER DEMULTIPLEXER WITH ADDRESS LATCHES

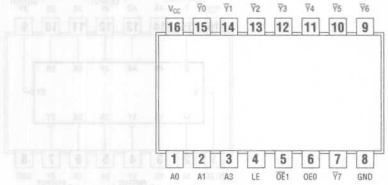

See page 260

238

3-TO-8-LINE DECODERS/DEMULTIPLEXERS

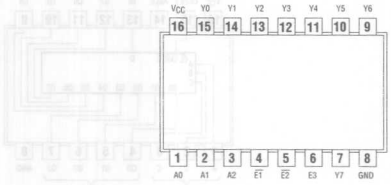

See page 262

240

OCTAL BUFFERS/LINE DRIVERS/LINE RECEIVERS

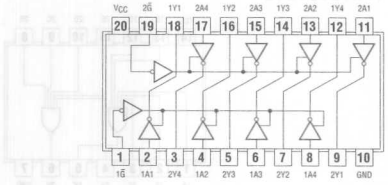

See page 264

243

QUADRUPLE BUS TRANSCEIVERS

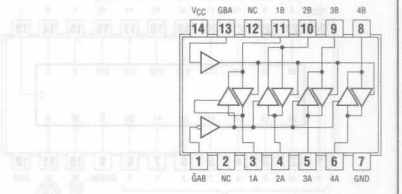

NC – No internal connection

See page 268

244

OCTAL BUFFERS/LINE DRIVERS/LINE RECEIVERS

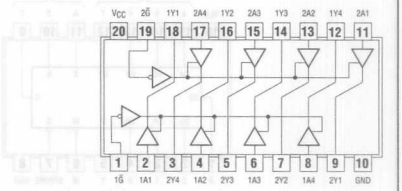

See page 270

245

OCTAL BUS TRANSCEIVERS

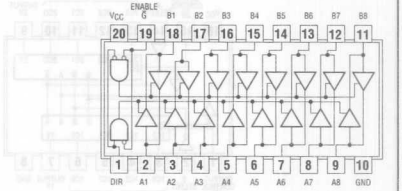

See page 272

Pin Assignments

247 BCD-TO-SEVEN-SEGMENT DECODERS/DRIVERS WITH RIPPLE BLANKING

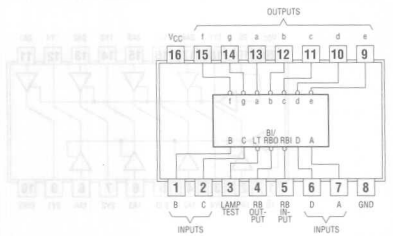

See page 274

250 1-OF-16 DATA GENERATOR/MULTIPLEXER

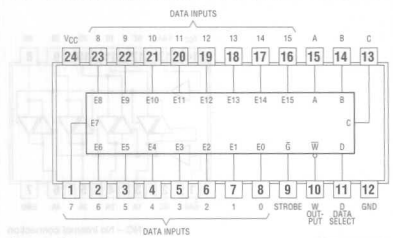

See page 276

251 DATA SELECTORS/MULTIPLEXERS

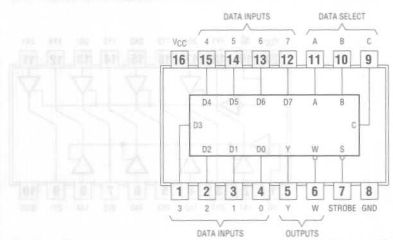

See page 278

253 DUAL DATA SELECTORS/MULTIPLEXERS

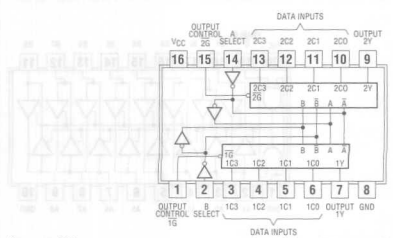

See page 280

257 QUAD DATA SELECTORS/MULTIPLEXERS

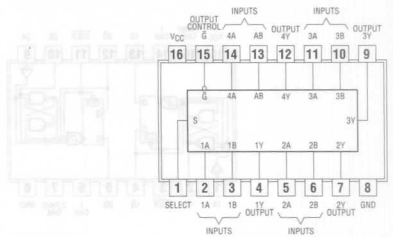

See page 282

258 QUAD DATA SELECTORS/MULTIPLEXERS

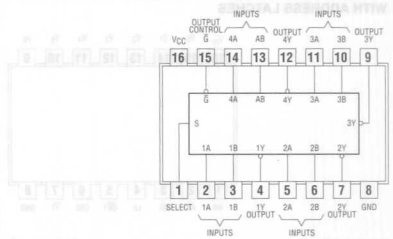

See page 284

259 8-BIT ADDRESSABLE LATCHES

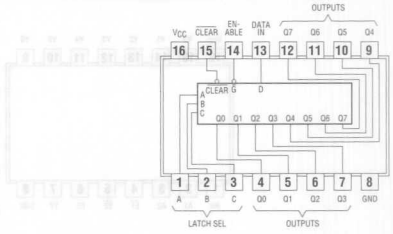

See page 286

260 DUAL 5-INPUT POSITIVE-NOR GATES

positive logic:

$Y = A + B + C + D + E$

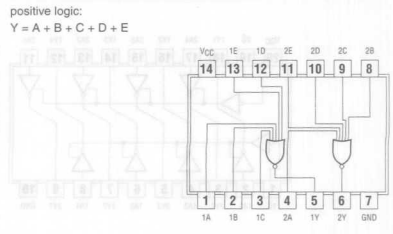

See page 288

265
QUAD COMPLEMENTARY-OUTPUT ELEMENTS

positive logic:
$Y = \overline{A}$, $W = A$
$Y = AB$, $W = AB$

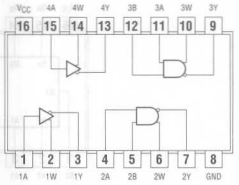

See page 289

266
QUAD 2-INPUT EXCLUSIVE-NOR GATES WITH OPEN-COLLECTOR OUTPUTS

positive logic:
$Y = \overline{A \oplus B}$

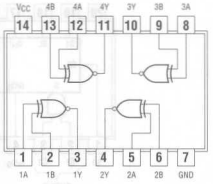

See page 290

273
OCTAL D-TYPE FLIP-FLOPS

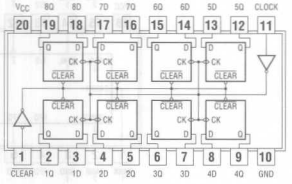

See page 291

276
QUAD J-$\overline{K}$ FLIP-FLORS

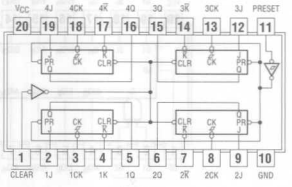

See page 292

279
QUAD $\overline{S}$-$\overline{R}$ LATCHES

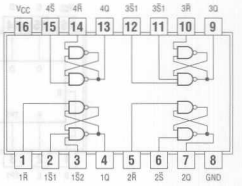

See page 293

280
9-BIT ODD/EVEN PARITY GENERATORS/CHECKERS

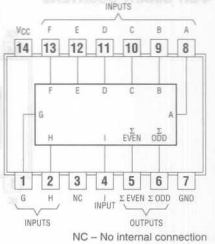

NC – No internal connection

See page 294

283
4-BIT BINARY FULL ADDERS

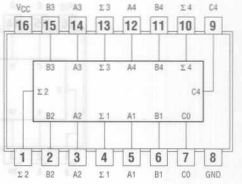

See page 296

286
9-BIT ODD/EVEN PARITY GENERATORS/CHECKERS WITH BUS DRIVER PARITY I/O PORT

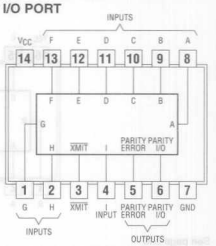

See page 298

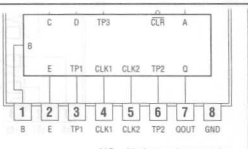

NC – No internal connection

See page 300

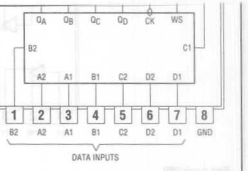

See page 308

293

4-BIT BINARY COUNTERS

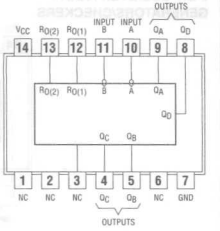

NC – No internal connection

See page 302

299

8-BIT BIDIRECTIONAL UNIVERSAL SHIFT/STORAGE REGISTERS

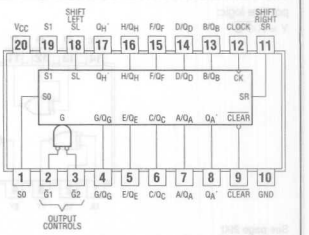

See page 310

294

PROGRAMMABLE FREQUENCY DIVIDER/DIGITAL TIMER

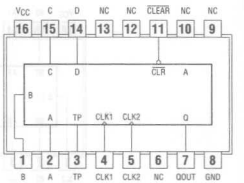

NC – No internal connection

See page 304

321

CRYSTAL-CONTROLLED OSCILLATOR

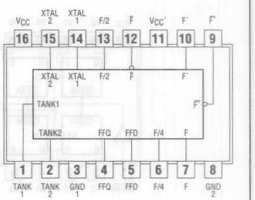

See page 312

297

DIGITAL PHASE-LOCKED-LOOP FILTERS

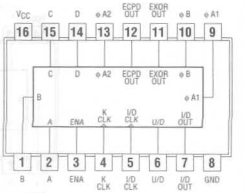

See page 306

323

8-BIT BIDIRECTIONAL SHIFT/STORAGE REGISTERS

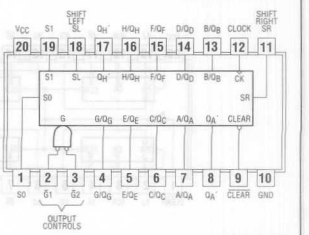

See page 314

348
8-LINE TO 3-LINE PRIORITY ENCODER

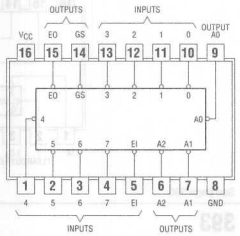

See page 316

354
356
8-INPUT MULTIPLEXERS/REGISTERS 3-STATE

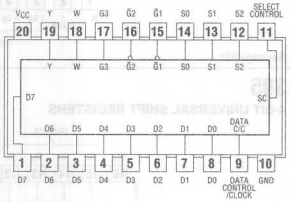

See page 318, 320

365
HEX BUS DRIVERS

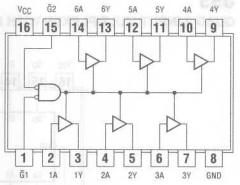

See page 322

366
HEX BUS DRIVERS
HEX BUFFERS/LINE DRIVERS 3-STATE

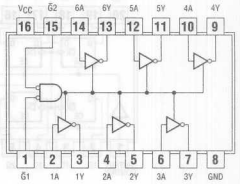

See page 323

367
HEX BUS DRIVERS

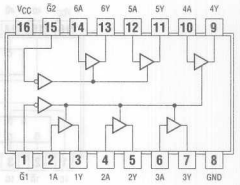

See page 324

368
HEX BUS DRIVERS

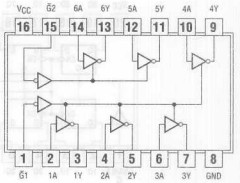

See page 324

373
OCTAL D-TYPE LATCHES

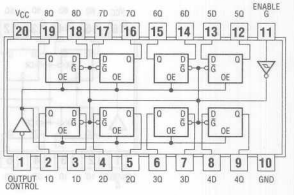

See page 325

374
OCTAL D-TYPE FLIP-FLOPS

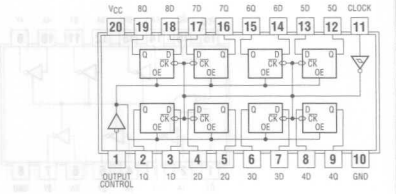

See page 326

375
4-BIT BISTABLE LATCHES

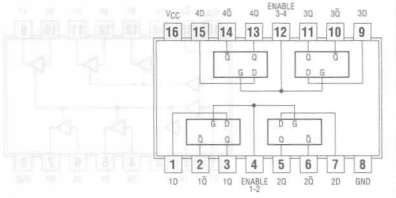

See page 327

377
OCTAL D-TYPE FLIP-FLOPS

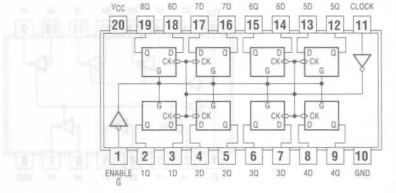

See page 328

378
HEX D-TYPE FLIP-FLOPS

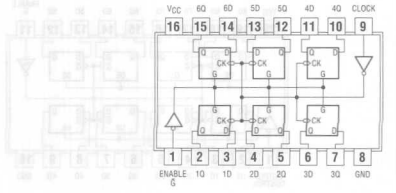

See page 329

390
DUAL DECADE COUNTERS

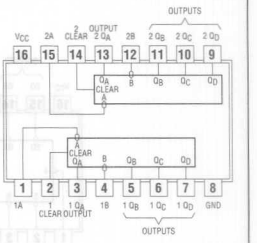

See page 330

393
DUAL 4-BIT BINARY COUNTERS

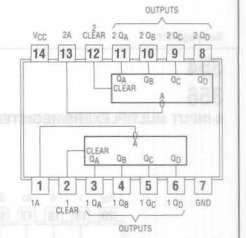

See page 331

395
4-BIT UNIVERSAL SHIFT REGISTERS

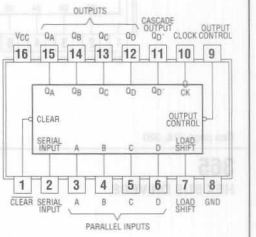

See page 332

399
QUAD 2-INPUT MULTIPLEXER WITH STORAGE

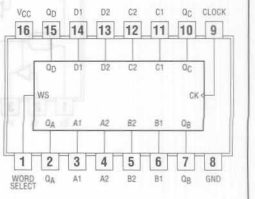

See page 334

Pin Assignments

423
RE-TRIGGERABLE MONO-STABLE MULTIVIBRATOR

positive logic:

Y = A

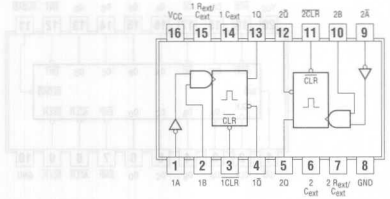

See page 335

442
QUADRUPLE TRIDIRECTIONAL BUS TRANSCEIVERS

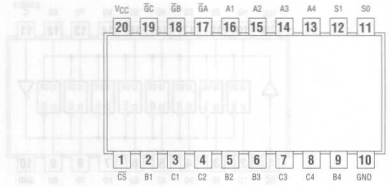

See page 336

465
OCTAL BUFFERS WITH 3-STATE OUTPUTS

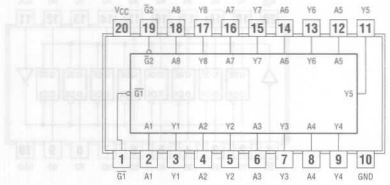

See page 338

518
8-BIT IDENTITY COMPARATOR

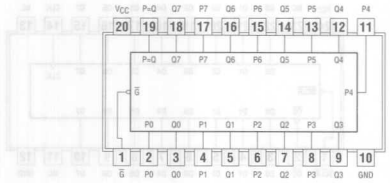

See page 340

520
521
8-BIT IDENTITY COMPARATOR

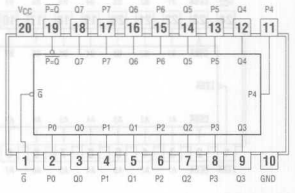

See page 342, 344

533
OCTAL D-TYPE TRANSPARENT LATCHES

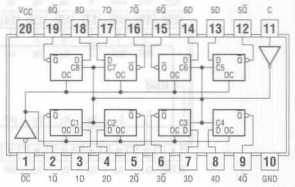

See page 346

534
OCTAL D-TYPE EDGE-TRIGGERED FLIP-FLOPS

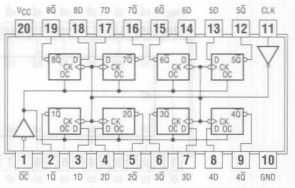

See page 347

540
541
OCTAL BUFFERS AND LINE DRIVERS

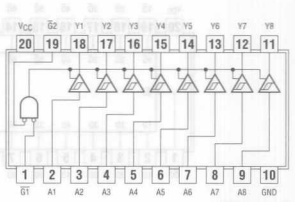

See page 348, 349

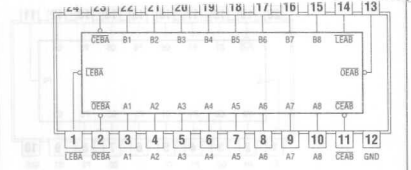

See page 350

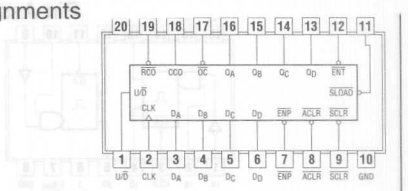

See page 356

561
SYNCHRONOUS 4-BIT COUNTER

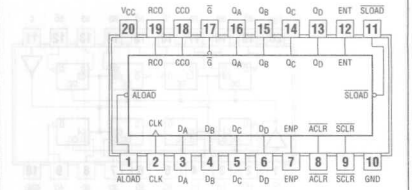

See page 352

563
OCTAL D-TYPE TRANSPARENT LATCHES WITH INVERTED OUTPUTS

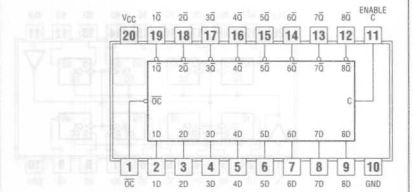

See page 354

564
OCTAL D-TYPE EDGE-TRIGGERED FLIP-FLOPS

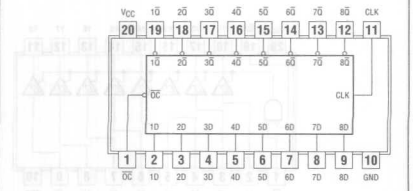

See page 355

573
OCTAL D-TYPE TRANSPARENT LATCHES

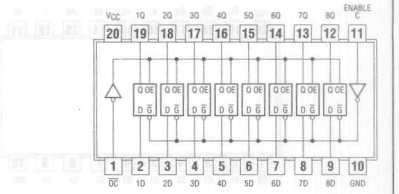

See page 358

574
OCTAL D-TYPE EDGE-TRIGGERED FLIP-FLOPS

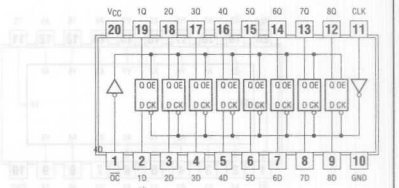

See page 359

575
OCTAL D-TYPES EDGE-TRIGGERED FLIP-FLOPS

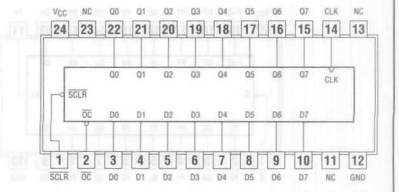

NC – No internal connection

See page 360

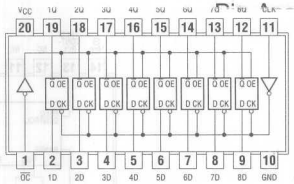

See page 361

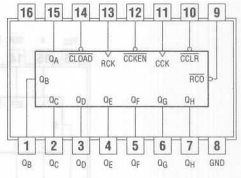

See page 366

577

OCTAL D-TYPE EDGE-TRIGGERED FLIP-FLOPS

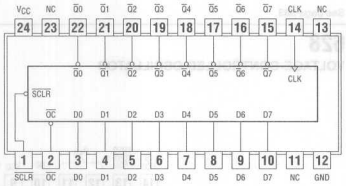

NC – No internal connection

See page 362

593

8-BIT BINARY COUNTER WITH INPUT REGISTER

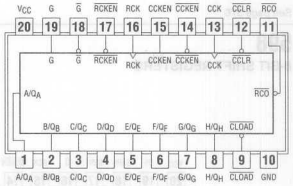

See page 368

580

OCTAL D-TYPE TRANSPARENT LATCHES WITH INVERTED OUTPUTS

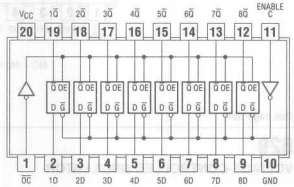

See page 363

594

8-BIT SHIFT REGISTER WITH OUTPUT LACH

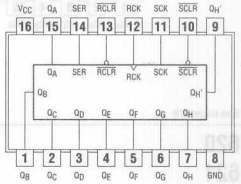

See page 370

590

8-BIT BINARY COUNTER WITH OUTPUT REGISTER

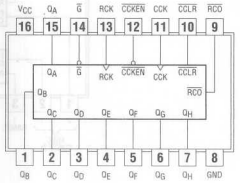

See page 364

595
596

8-BIT SHIFT REGISTER WITH OUTPUT LATCH

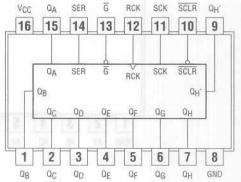

See page 372, 374

597
8-BIT SHIFT REGISTER WITH INPUT LATCH

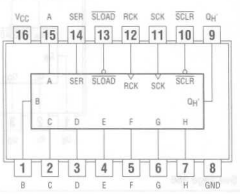

See page 376

598
8-BIT SHIFT REGISTERS

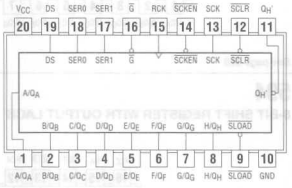

See page 378

620
621
623
OCTAL BUS TRANSCEIVERS

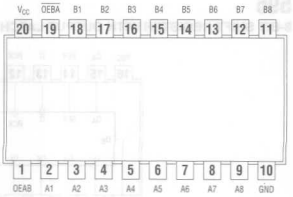

See page 380, 381, 382

624
VOLTAGE-CONTROLLED OSCILLATOR

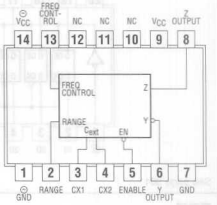

NC – No internal connection

See page 383

628
VOLTAGE-CONTROLLED OSCILLATOR

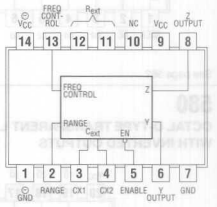

NC – No internal connection

See page 384

629
VOLTAGE-CONTROLLED OSCILLATOR

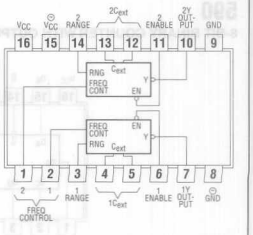

See page 385

638
OCTAL BUS TRANSCEIVERS

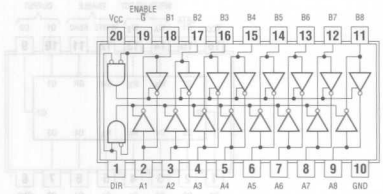

See page 386

639
OCTAL BUS TRANSCEIVERS

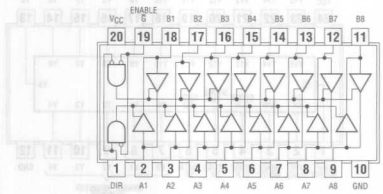

See page 387

640
642
OCTAL BUS TRANSCEIVERS

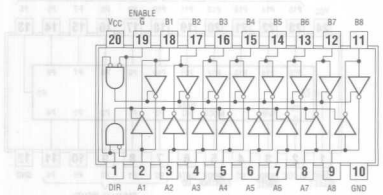

See page 388, 390

641
645
OCTAL BUS TRANSCEIVERS

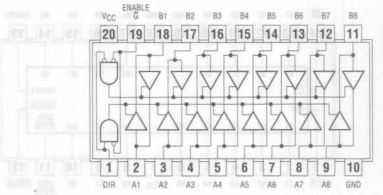

See page 389, 391

646
647
648
OCTAL BUS TRANSCEIVERS AND REGISTERS

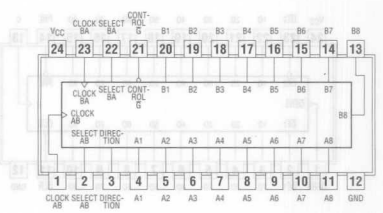

See page 392, 394, 396

651
652
653
654
OCTAL BUS TRANSCEIVERS AND REGISTERS

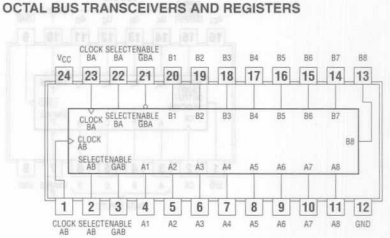

See page 398, 400, 402, 404

Pin Assignments

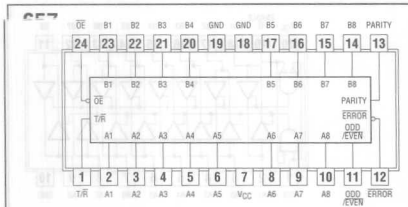

See page 406

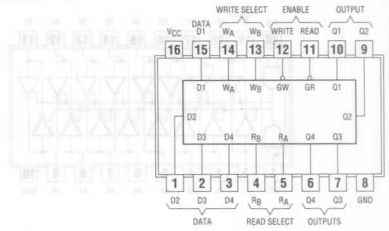

See page 414

666
667
8-BIT D-TYPE TRANSPARENT READ-BACK LATCHES

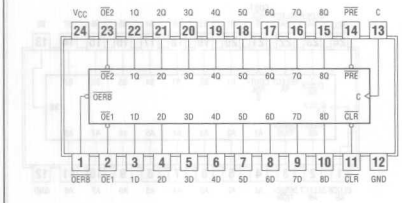

See page 408, 410

673
16-BIT SHIFT REGISTER

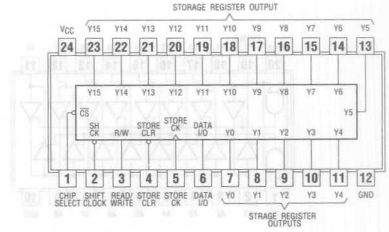

See page 416

669
SYNCHRONOUS 4-BIT UP/DOWN BINARY COUNTER

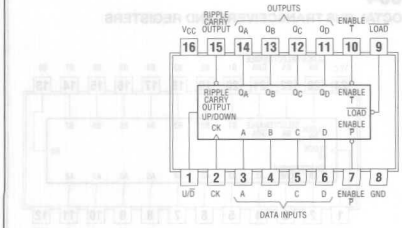

See page 412

674
16-BIT SHFT REGISTER

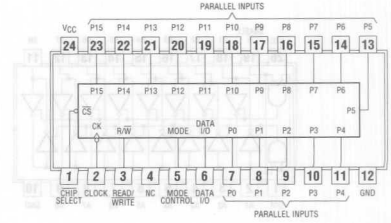

NC – No internal connection

See page 418

Pin Assignments

679
ADDRESS COMPARATOR

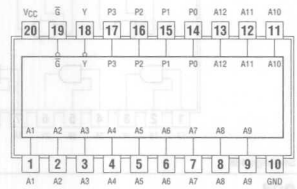

See page 420

682
684
8-BIT IDENTITY COMPARATOR

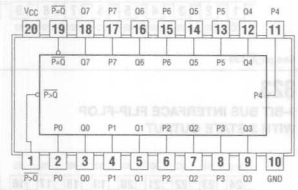

See page 422, 424

686
8-BIT IDENTITY COMPARATOR

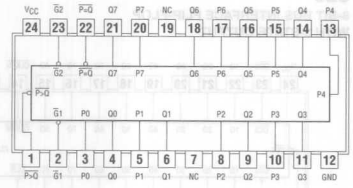

NC – No internal connection

See page 426

688
8-BIT IDENTITY COMPARATOR

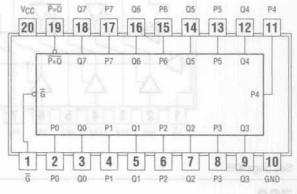

See page 428

697
699
SYNCHRONOUS UP/DOWN COUNTER WITH OUTPUT REGISTER, MULTIPLEXED THREE-STATE OUTPUT

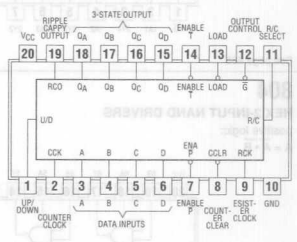

See page 430, 432

756
OCTAL BUFFER/LINE DRIVER/LINE RECEIVER WITH OPEN-COLLECTOR OUTPUTS

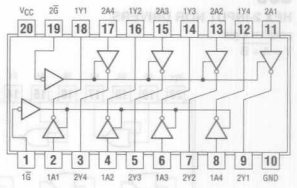

See page 434

757
OCTAL BUFFER/LINE DRIVER/LINE RECEIVER WITH OPEN-COLLECTOR OUTPUTS

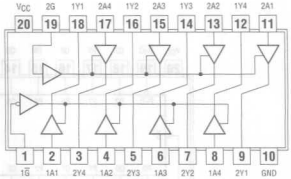

See page 435

760
OCTAL BUFFER/LINE DRIVER/LINE RECEIVER WITH OPEN-COLLECTOR OUTPUTS

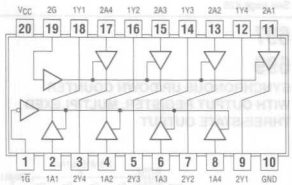

See page 436

804
HEX 2-INPUT NAND DRIVERS

positive logic:

$A = \overline{A \cdot B}$

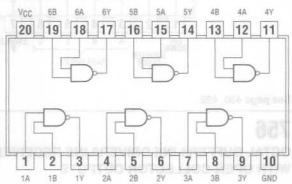

See page 437

805
HEX 2-INPUT NOR DRIVERS

positive logic:

$Y = \overline{A + B}$

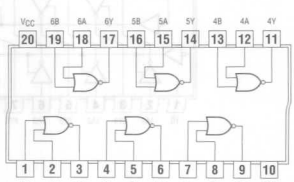

See page 438

808
HEX 2-INPUT AND DRIVERS

positive logic:

$Y = A + B$

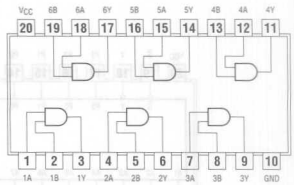

See page 438

821
10-BIT BUS INTERFACE FLIP FLOPS WITH 3-STATE OUTPUT

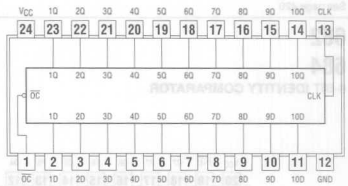

See page 439

823
9-BIT BUS INTERFACE FLIP-FLOP WITH 3-STATE OUTPUT

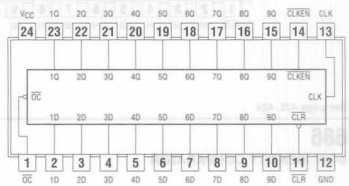

See page 440

825
8-BIT BUS INTERFACE FLIP-FLOP WITH 3-STATE OUTPUT

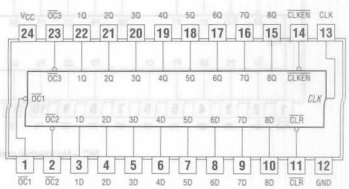

See page 442

Pin Assignments

827
10-BIT BUFFER/BUS DRIVERS

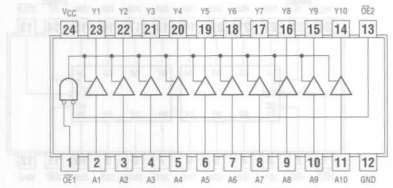

See page 444

828
10-BIT BUFFERS/BUS DRIVERS

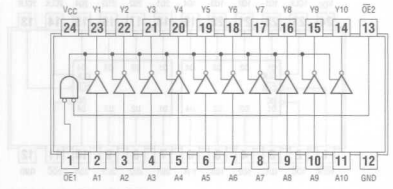

See page 444

832
HEX 2-INPUT OR DRIVERS

positive logic:
Y=A+B

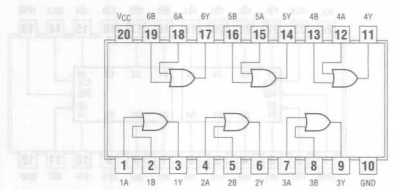

See page 445

833
10-BIT TO 9-BIT PARITY BUS TRANSCEIVERS

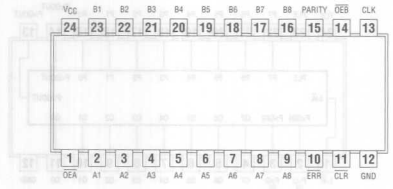

See page 446

841
10-BIT BUS INTERFACE D-TYPE LATCHES WITH 3-STATE OUTPUTS

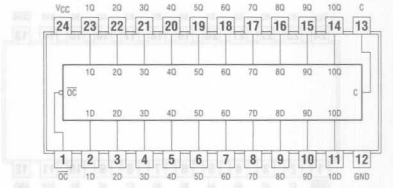

See page 448

843
9-BIT BUS INTERFACE D-TYPE LATCHES WITH 3-STATE OUTPUTS

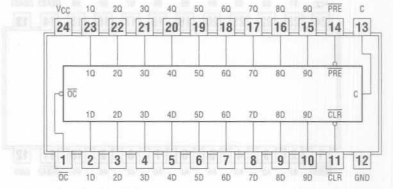

See page 450

853
8-BIT TO 9-BIT PARITY BUS TRANSCEIVERS

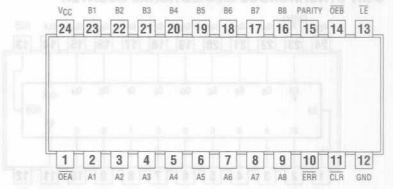

See page 452

857
HEX 2-TO-1 UNIVERSAL MULTIPLEXERS

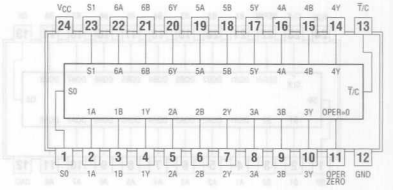

See page 454

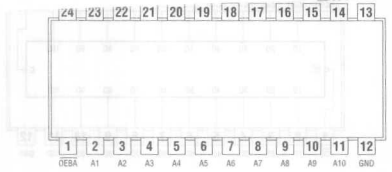

See page 456

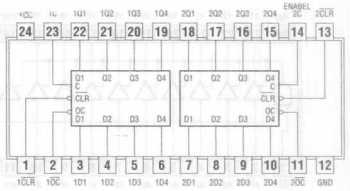

See page 464

863

9-BIT BUS TRANSCEIVER WITH 3-STATE OUTPUTS

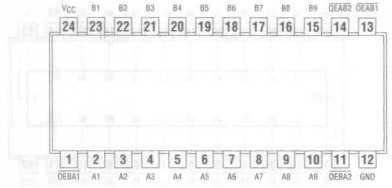

NC – No internal connection

See page 457

874

DUAL 4-BIT D-TYPE EDGE-TRIGGERED FLIP-FLOPS

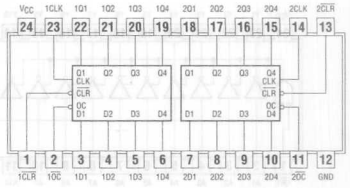

NC – No internal connection

See page 465

867
869

8-BIT SYNCHRONOUS BIDIRECTIONAL COUNTER

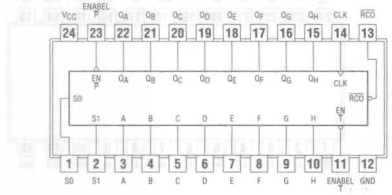

See page 458, 460

876

DUAL 4-BIT D-TYPE FLIP-FLOPS

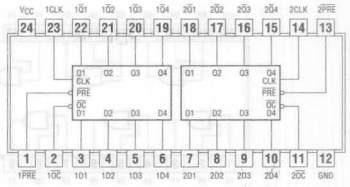

See page 466

870

DUAL 16-BY 4-BIT REGISTER FILES

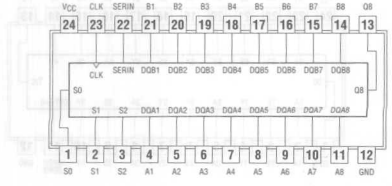

See page 462

885

8-BIT MAGNITUDE COMPARATOR

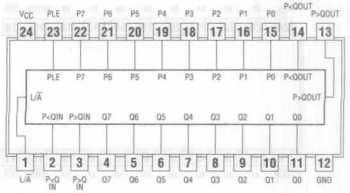

See page 468

Pin Assignments

990
8-BIT D-TYPE TRANSPARENT READ-BACK LATCHES

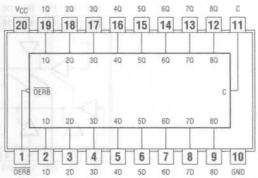

See page 470

992
9-BIT D-TYPE TRANSPARENT

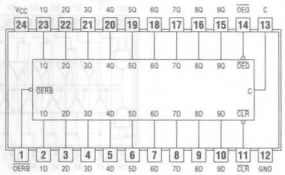

See page 471

994
10-BIT D-TYPE TRANSPARENT READ-BACK LATCHES

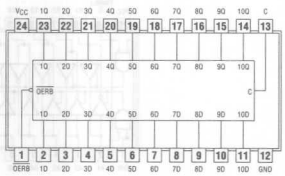

See page 472

996
8-BIT D-TYPE EDGE-TRIGGERED READ-BACK LATCHES

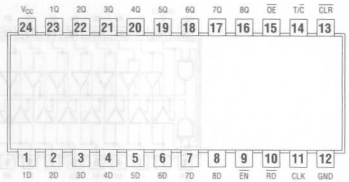

See page 474

1000
QUAD 2-INPUT NAND BUFFERS/DRIVERS

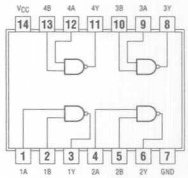

See page 476

1004
HEX INVERTING DRIVERS

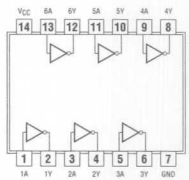

See page 476

1005
HEX INVERTING BUFFER GATES WITH OPEN-COLLECTOR OUTPUTS

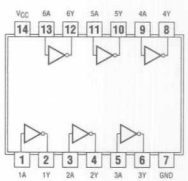

See page 477

1008
QUADRUPLE 2-INPUT POSITIVE-AND BUFFERS/DRIVERS

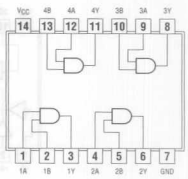

See page 477

1032
QUAD 2-INPUT OR BUFFERS/DRIVERS

positive logic:

Y = A+B

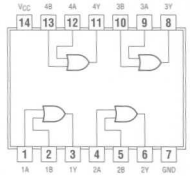

See page 478

1034
HEX DRIVERS

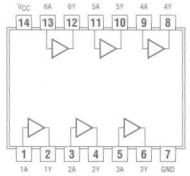

See page 478

1035
HEX BUFFERS
WITH OPEN-COLLECTOR OUTPUTS

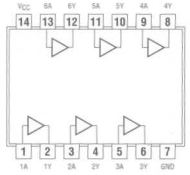

See page 479

1240
OCTAL BUFFERS/LINE DRIVERS/LINE RECEIVERS

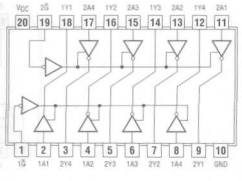

See page 479

1244
OCTAL BUFFERS/LINE DRIVERS/LINE RECEIVERS

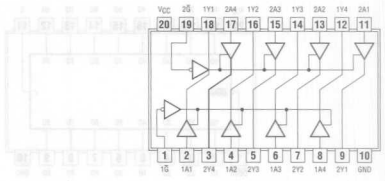

See page 480

1245
OCTAL BUS TRANSCEIVERS

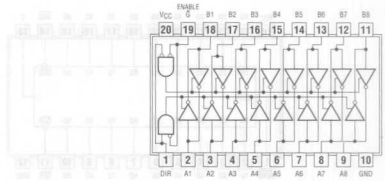

See page 480

1640
OCTAL BUS TRANSCEIVERS

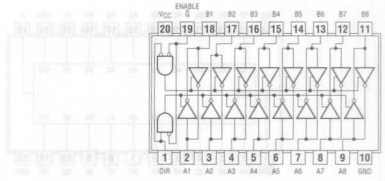

See page 481

1645
OCTAL BUS TRANSCEIVERS

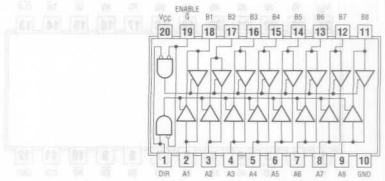

See page 481

2240
OCTAL BUFFERS AND LINE DRIVERS/MOS DRIVERS WITH 3-STATE OUTPUTS

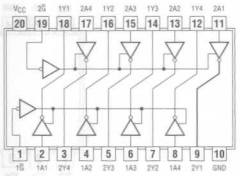

See page 482

2241
OCTAL BUFFERS AND LINE DRIVERS/MOS DRIVERS WITH 3-STATE OUTPUTS

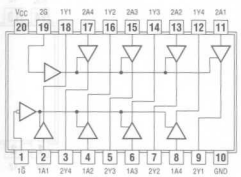

See page 483

2244
OCTAL BUFFERS AND LINE DRIVERS/MOS DRIVERS WITH 3-STATE OUTPUTS

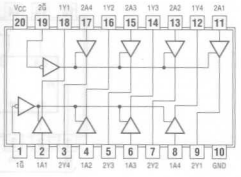

See page 484

2245
OCTAL TRANSCEIVER AND LINE/MOS DRIVERS WITH 3-STATE OUTPUTS

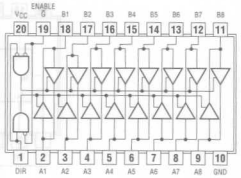

See page 485

2373
25-Ω OCTAL TRANSPARENT D-TYPE LATCH WITH 3-STATE OUTPUTS

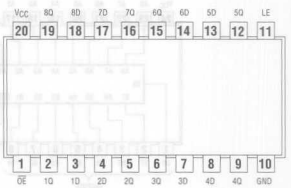

See page 486

2414
MEMORY DECODER WITH ON-CHIP V_{CC} MONITOR

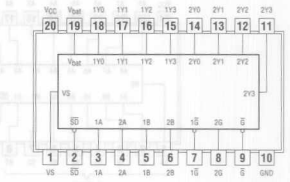

See page 488

2541
NON-INVERTED 3-STATE OUTPUTS OCTAL LINE DRIVERS/MOS DRIVERS WITH 3-STATE OUTPUTS

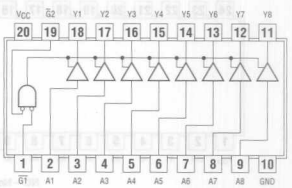

See page 490

2827 3-STATE OUTPUTS
2828 3-STATE INVERTING OUTPUTS
BUS/MOS MEMORY DRIVERS

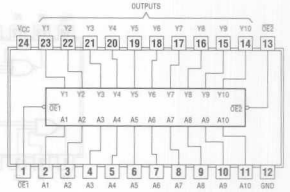

See page 490, 491

Pin Assignments

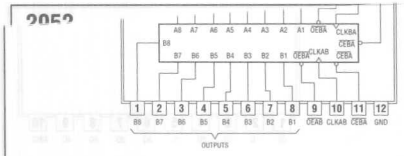

See page 492

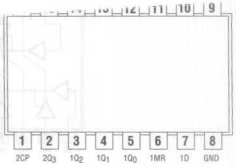

See page 498

2953

OCTAL BUS TRANSCEIVERS AND REGISTERS

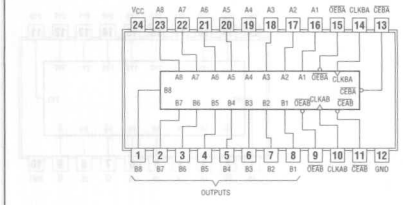

See page 494

4016

QUAD BILATERAL SWITCH

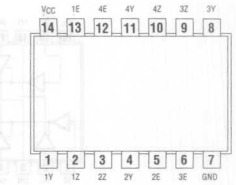

See page 499

3245

OCTAL BUS TRANSCEIVER WITH ADJUSTABLE OUTPUT VOLTAGE AND 3-STATE OUTPUTS

NC – No internal connection

See page 496

4017

DECADE COUNTERS/DIVIDERS

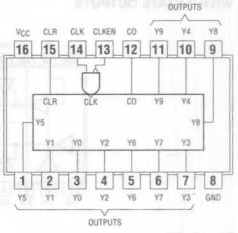

See page 500

4002

DUAL 4-INPUT POSITIVE-NOR GATES

positive logic:

$Y = \overline{A + B + C + D}$

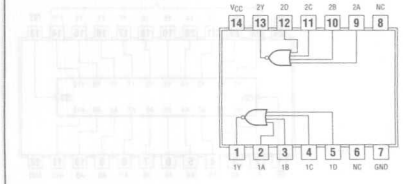

See page 497

4020

14-STAGE BINARY COUNTERS

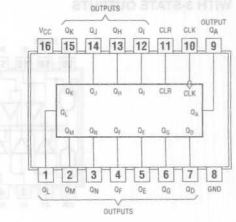

See page 502

Pin Assignments

4024
7-STAGE BINARY COUNTERS

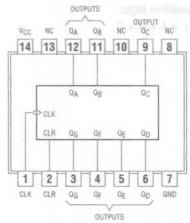

NC – No internal connection

See page 503

4040
12-STAGE BINARY COUNTERS

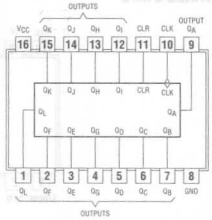

See page 504

4046
PHASE-LOCKED-LOOP WITH VCO

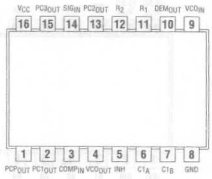

See page 505

4049
HEX INVERTING BUFFERS

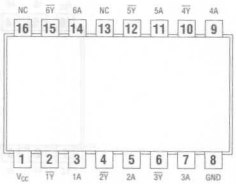

NC – No internal connection

See page 506

4050
HEX INVERTING BUFFERS NON-INVERTING

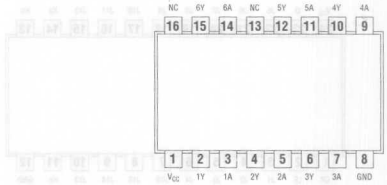

NC – No internal connection

See page 506

4051
8-CHANNEL ANALOG MULTIPLEXERS/DEMULTIPLEXERS

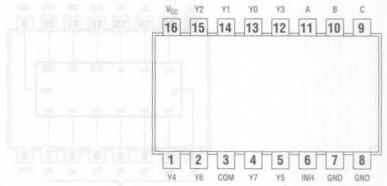

See page 507

4052
DUAL 4-CHANNEL ANALOG MULTIPLEXERS/DEMULTIPLEXERS

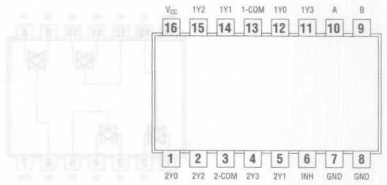

See page 508

4053
TRIPLE 2-CHANNEL ANALOG MULTIPLEXERS/DEMULTIPLEXERS

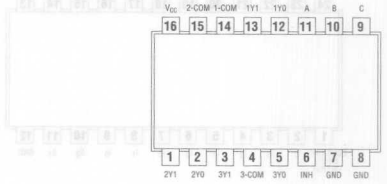

See page 509

4059
CMOS PROGRAMMABLE DIVIDE-BY-N COUNTER

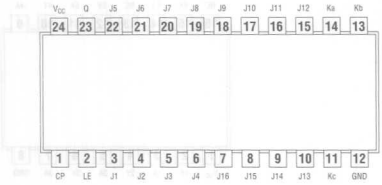

See page 510

4060
ASYNCHRONOUS 14-STAGE BINARY COUNTERS AND OSCILLATORS

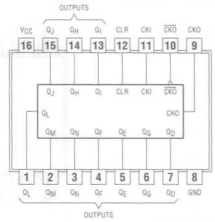

See page 511

4066
QUADRUPLE BILATERAL SWITCHES

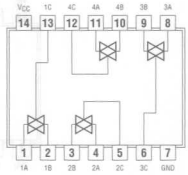

See page 512

4067
16-CHANNEL ANALOG MULTIPLEXER/DEMULTIPLEXER

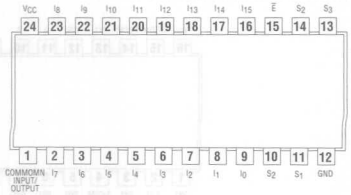

See page 513

4075
TRIPLE 3-INPUT OR GATES

positive logic:

$Y = A + B + C$

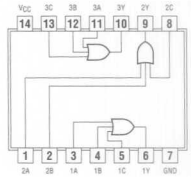

See page 514

4094
8-STAGE SHIFT AND STORE BUS REGISTER, THREE-STATE

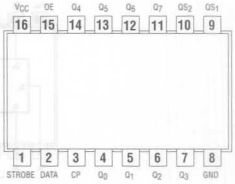

See page 516

4245
OCTAL BUS TRANSCEIVER AND 3.3-V TO 5-V SHIFTER WITH 3-STATE OUTPUTS

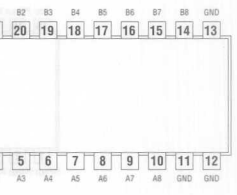

See page 518

4316
QUAD ANALOG SWITCH WITH LEVEL TRANSLATION

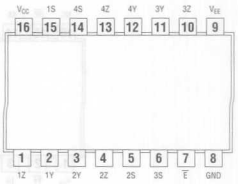

See page 519

Pin Assignments

4351
ANALOG MULTIPLEXERS/DEMULTIPLEXERS WITH LATCH

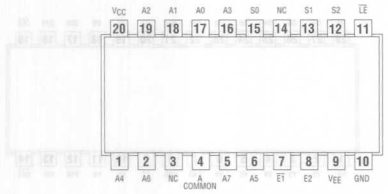

NC – No internal connection

See page 520

4352
ANALOG MULTIPLEXERS/DEMULTIPLEXERS WITH LATCH

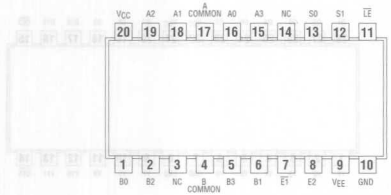

NC – No internal connection

See page 521

4374
OCTAL EDGE-TRIGGERED D-TYPE DUAL-RANK FLIP-FLOP WITH 3-STAE OUTPUTS

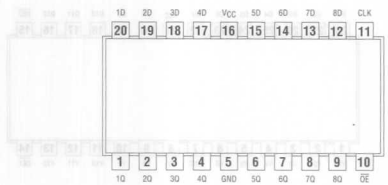

See page 522

4511
BCD-TO-7 SEGMENT LATCH/DECODER/DRIVERS

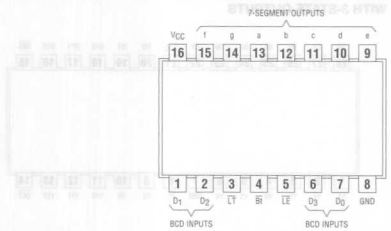

See page 523

4514
4-LINE TO 16-LINE DECODERS/DEMULTIPLEXERS WITH LATCHES

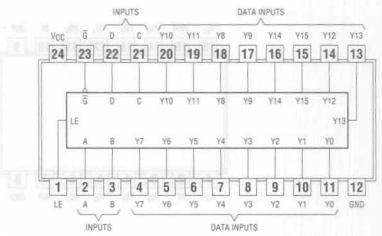

See page 524

4515
4-LINE TO 16-LINE DECODERS/DEMULTIPLEXERS WITH LATCHES

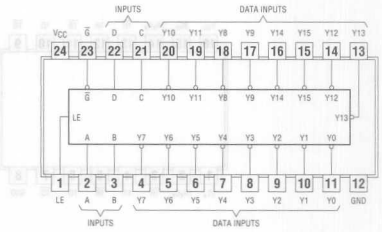

See page 526

4518
DUAL SYNCHRONOUS COUNTERS

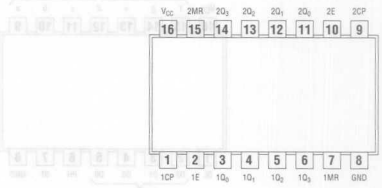

See page 528

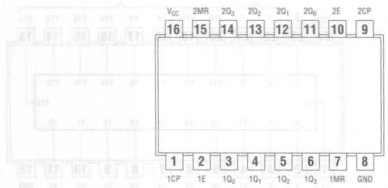

See page 529

4538

DUAL RETRIGGERABLE PRECISION MONO STABLE MULTIVIBRATOR

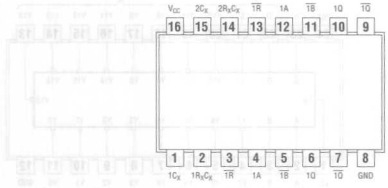

See page 530

4543

BCD-TO-7 SEGMENT LATCH/DECODER/DRIVERS

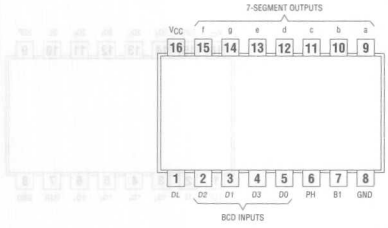

See page 532

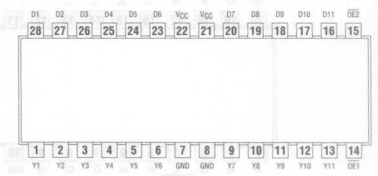

See page 534

5401

11-BIT LINE/MEMORY DRIVERS WITH 3-STATE OUTPUTS

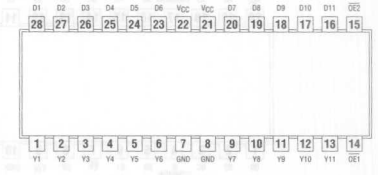

See page 534

5402

12-BIT LINE/MEMORY DRIVERS WITH 3-STATE OUTPUTS

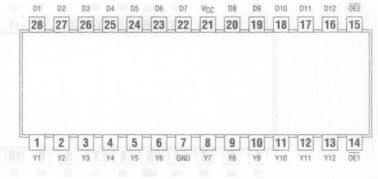

See page 535

5403

11-BIT LINE/MEMORY DRIVERS WITH 3-STATE OUTPUTS

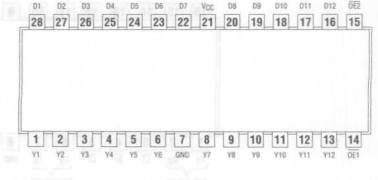

See page 535

positive logic:
$Y = A \cdot B$

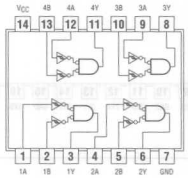

See page 536

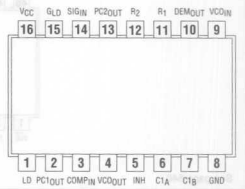

See page 538

7002

QUADRUPLE POSITIVE-NOR GATES WITH SCHMITT-TRIGGER INPUTS

positive logic:
$Y = \overline{A} + \overline{B}$

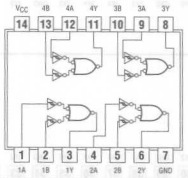

See page 536

7266

QUAD 2-INPUT EXCLUSIVE-NOR GATES

positive logic:
$Y = \overline{A \oplus B}$

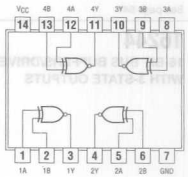

See page 539

7032

QUADRUPLE POSITIVE-OR GATES WITH SCHMITT-TRIGGER INPUTS

positive logic:
$Y = A + B$

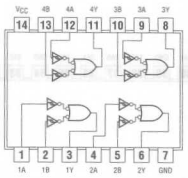

See page 537

8003

DUAL 2-INPUT POSITIVE-NAND GATES

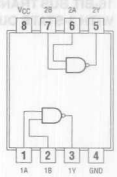

See page 539

16240

16-BIT BUS BUFFERS/DRIVERS
WITH 3-STATE OUTPUTS

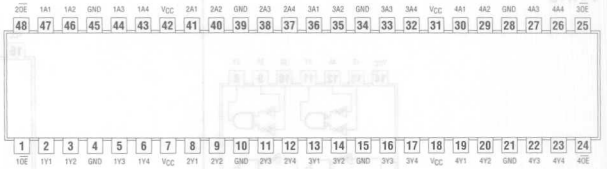

See page 540

16241

16-BIT BUS BUFFERS/DRIVERS
WITH 3-STATE OUTPUTS

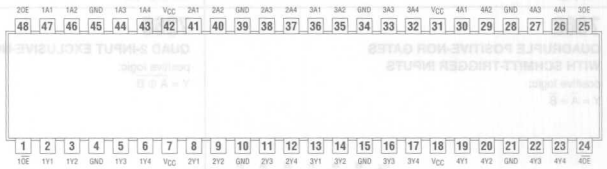

See page 541

16244

16-BIT BUS BUFFERS/DRIVERS
WITH 3-STATE OUTPUTS

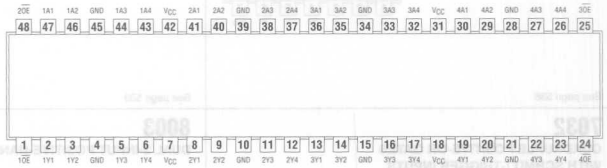

See page 544

16245

16-BIT BUS TRANSCEIVER
WITH 3-STATE OUTPUTS

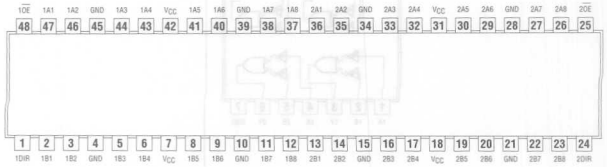

See page 546

Pin Assignments

16260

12-BIT TO 24-BIT MULTIPLEXES D-TYPE LATCH WITH 3-STATE OUTPUTS

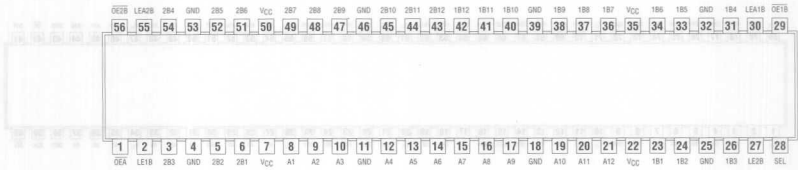

See page 548

16269

12-BIT TO 24-BIT REGISTERED BUS TRANSCEIVER WITH 3-STATE OUTPUTS

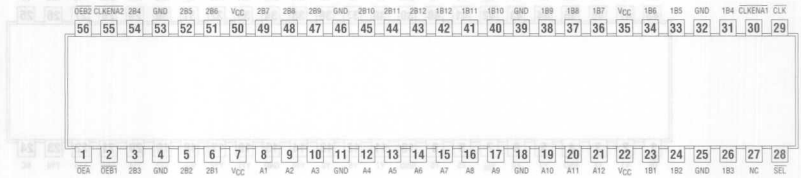

NC – No internal connection

See page 550

16270

12-BIT TO 24-BIT REGISTERED BUS EXCHANGER WITH 3-STATE OUTPUTS

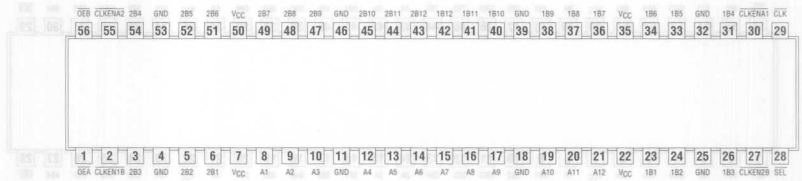

See page 552

16271

12-BIT TO 24-BIT MULTIPLEXED BUS EXCHANGER WITH 3-STATE OUTPUTS

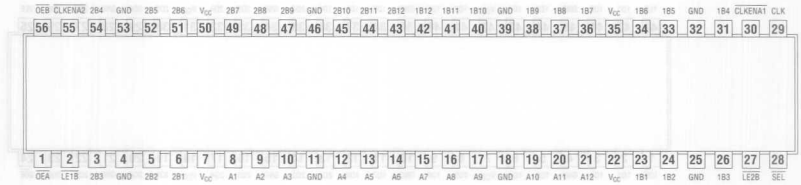

See page 554

Pin Assignments

See page 556

16334

16-BIT UNIVERSAL BUS DRIVER
WITH 3-STATE OUTPUTS

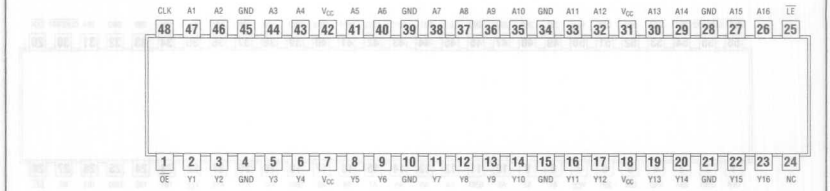

NC – No internal connection

See page 558

16344

1-BIT TO 4-BIT ADDRESS DRIVER
WITH 3-STATE OUTPUTS

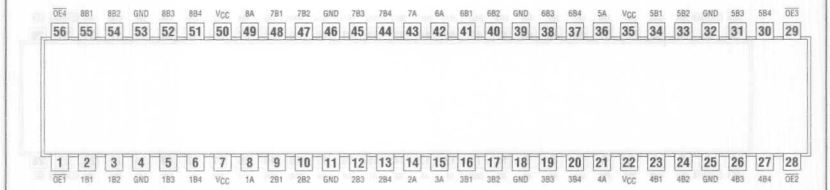

See page 560

16373

16-BIT TRANSPARENT LATCHES
WITH 3-STATE OUTPUTS

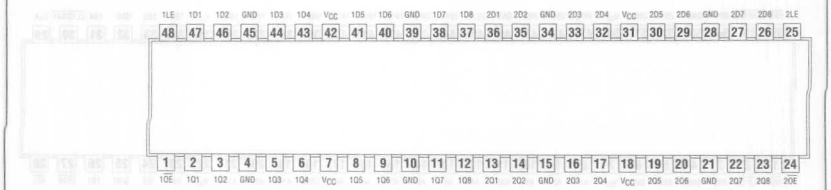

See page 562

16374

16-BIT EDGE-TRIGGERED D-TYPE FLIP-FLOPS WITH 3-STATE OUTPUTS

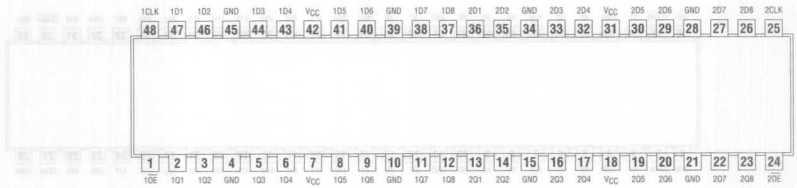

See page 564

16409

9-BIT, 4-PORT UNIVERSAL BUS EXCHANGER WITH 3-STATE OUTPUTS

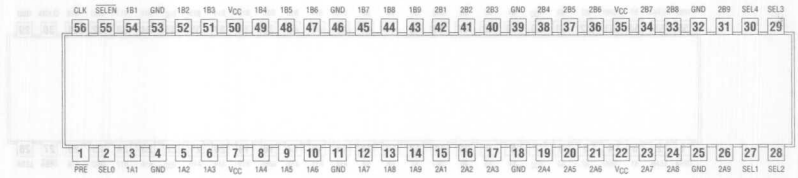

See page 566

16460

4-TO-1 MULTIPLEXED/DEMULTIPLEXED TRANSCEIVERS WITH 3-STATE OUTPUTS

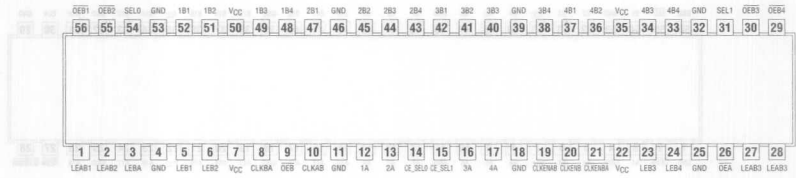

See page 568

16470

16-BIT REGISTERED TRANSCEIVERS WITH 3-STATE OUTPUTS

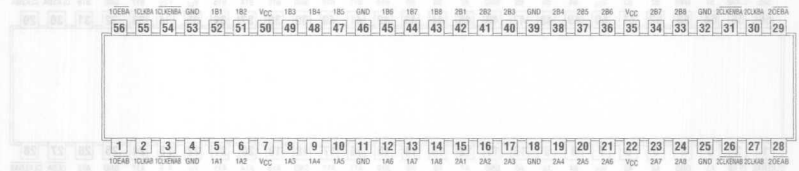

See page 570

16500

18-BIT UNIVERSAL BUS TRANSCEIVER WITH 3-STATE OUTPUTS

See page 572

16501

18-BIT UNIVERSAL BUS TRANSCEIVER WITH 3-STATE OUTPUTS

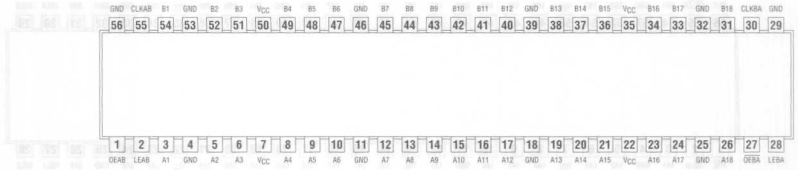

See page 574

16524

18-BIT REGISTERED BUS TRANSCEIVER WITH 3-STATE OUTPUTS

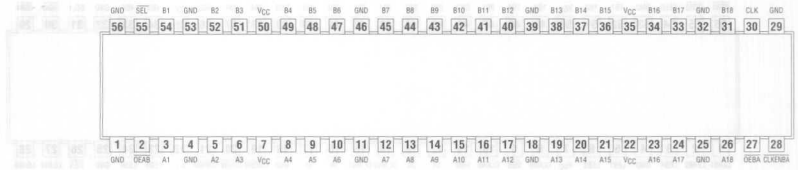

See page 576

16525

18-BIT REGISTERED BUS TRANSCEIVER WITH 3-STATE OUTPUTS

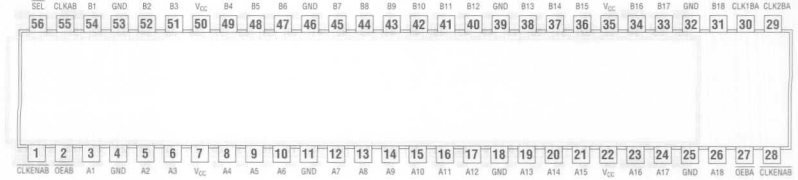

See page 578

Pin Assignments

16540
16-BIT BUFFERS/DRIVERS
WITH 3-STATE OUTPUTS

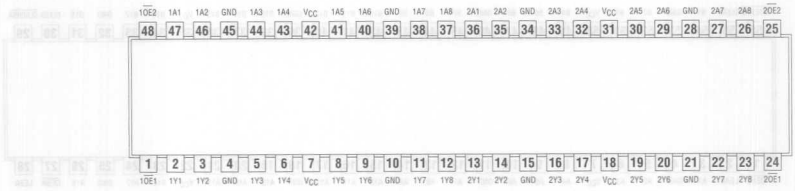

See page 580

16541
16-BIT BUFFERS/DRIVERS
WITH 3-STATE OUTPUTS

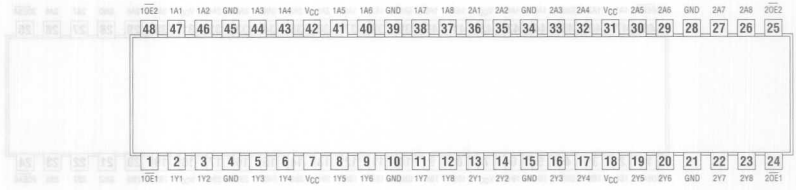

See page 581

16543
16-BIT REGISTERED TRANSCEIVERS
WITH 3-STATE OUTPUTS

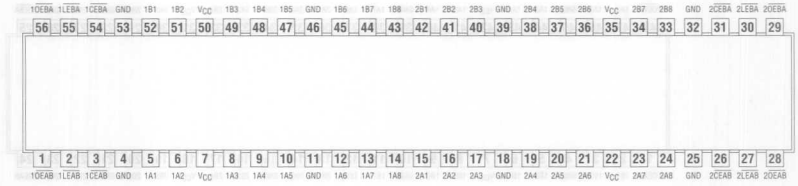

See page 582

16600
18-BIT UNIVERSAL BUS TRANSCEIVERS
WITH 3-STATE OUTPUTS

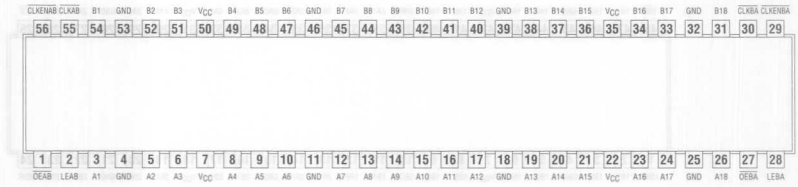

See page 584

16601

18-BIT UNIVERSAL BUS TRANSCEIVERS WITH 3-STATE OUTPUTS

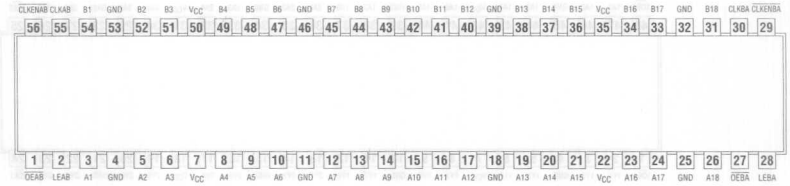

See page 586

16620

16-BIT BUS TRANSCEIVERS WITH 3-STATE OUTPUTS

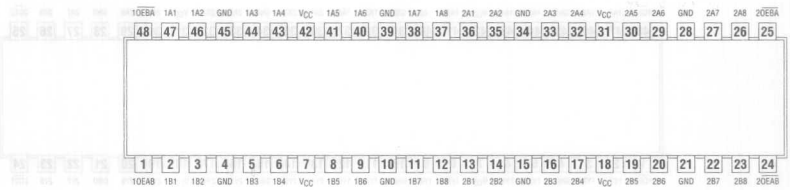

See page 588

16623

16-BIT BUS TRANSCEIVERS WITH 3-STATE OUTPUTS

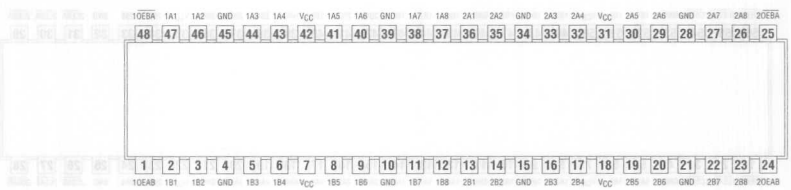

See page 590

16640

16-BIT BUS TRANSCEIVER WITH 3-STATE OUTPUTS

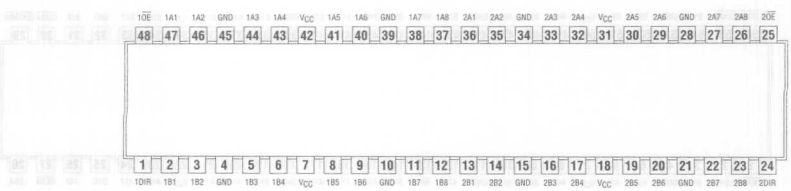

See page 591

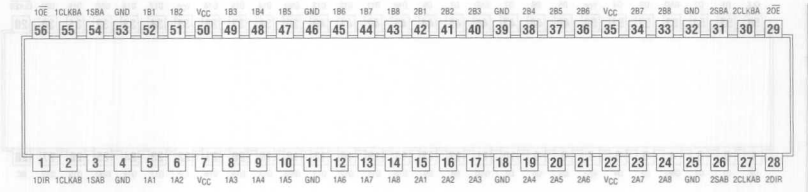

See page 592

16651

16-BIT BUS TRANSCEIVERS AND REGISTERS WITH 3-STATE OUTPUTS

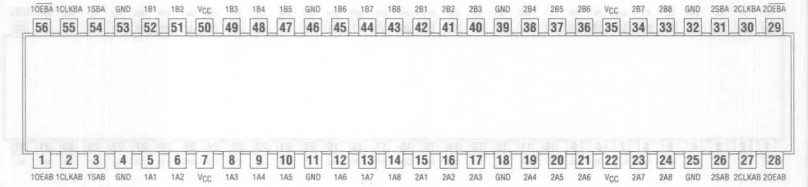

See page 594

16652

16-BIT BUS TRANSCEIVERS AND REGISTERS WITH 3-STATE OUTPUTS

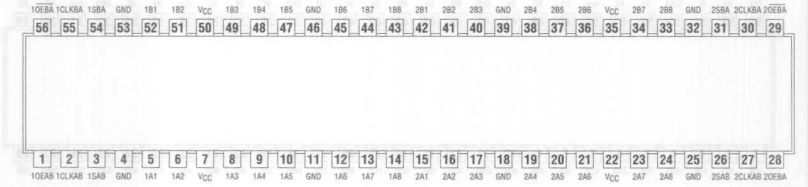

See page 596

16657

16-BIT TRANSCEIVERS WITH PARITY GENERATORS/CHECKERS AND 3-STATE OUTPUTS

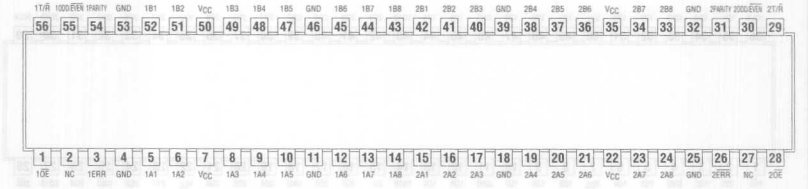

NC – No internal connection

See page 598

Pin Assignments

16721
20-BIT FLIP-FLOP
WITH 3-STATE OUTPUTS

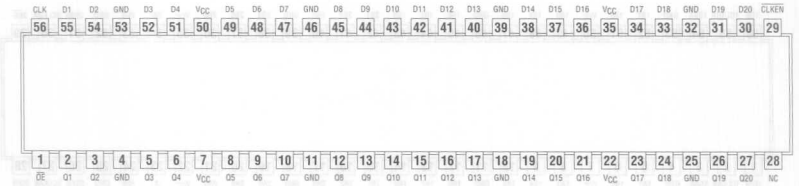

NC – No internal connection

See page 600

16722
22-BIT FLIP-FLOP WITH 3-STATE OUTPUTS

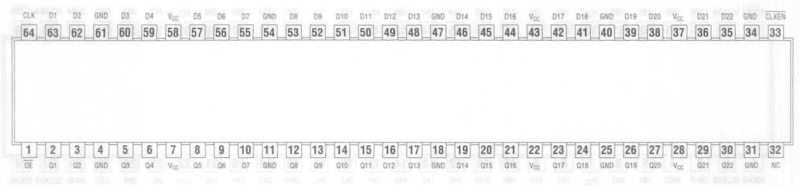

NC – No internal connection

See page 601

16820
10-BIT EDGE-TRIGGERED D-TYPE FLIP-FLOPS
WITH DUAL OUTPUTS

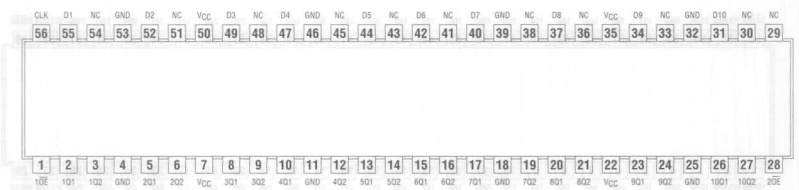

NC – No internal connection

See page 602

16821
20-BIT BUS INTERFACE FLIP-FLOPS
WITH 3-STATE OUTPUTS

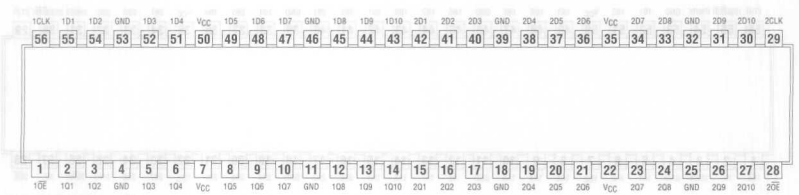

See page 603

Pin Assignments

16823

18-BIT EDGE-TRIGGERED D-TYPE FLIP-FLOPS WITH DUAL OUTPUTS

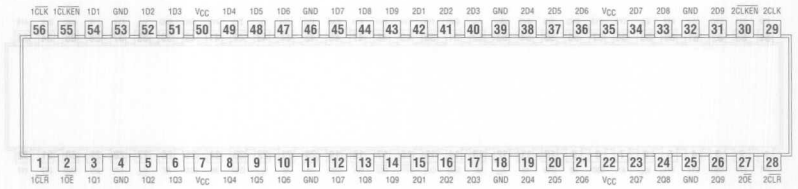

See page 604

16825

18-BIT BUS BUFFERS/DRIVERS WITH 3-STATE OUTPUTS

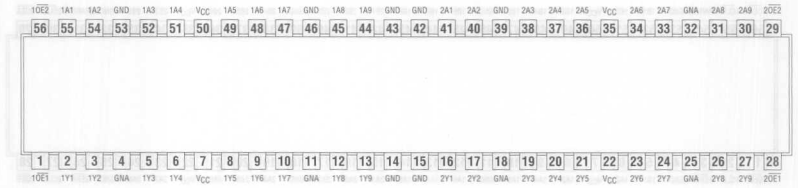

See page 605

16827

20-BIT BUS BUFFERS/DRIVERS WITH 3-STATE OUTPUTS

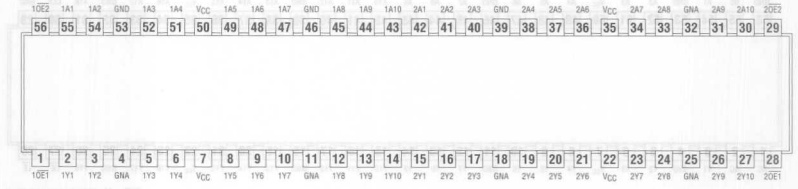

See page 606

16831

1-TO-4 ADDRESS REGISTER/DRIVER WITH 3-STATE OUTPUTS

NC – No internal connection

See page 607

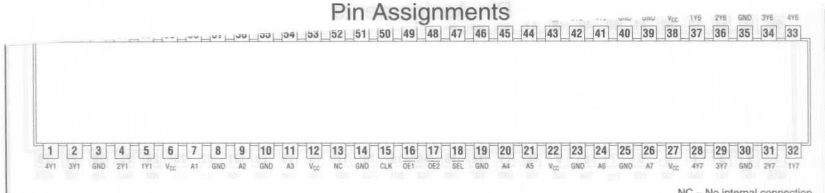

NC – No internal connection

See page 608

16833

DUAL 8-BIT TO 9-BIT PARITY BUS TRANSCEIVERS

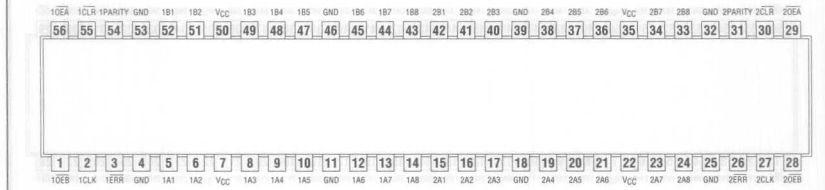

See page 610

16834

16-BIT UNIVERSAL BUS DRIVER WITH 3-STATE OUTPUTS

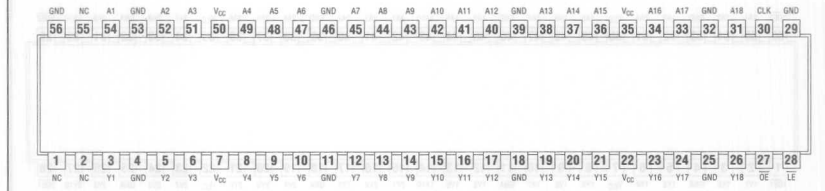

NC – No internal connection

See page 612

16835

3.3-V ABT 18-BIT UNIVERSAL BUS DRIVER WITH 3-STATE OUTPUTS

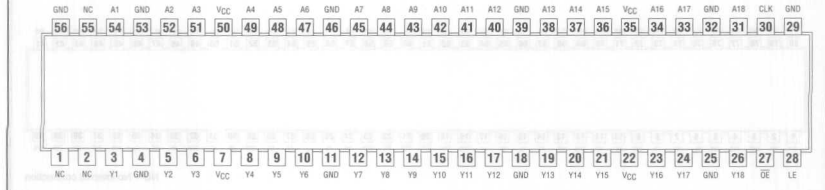

NC – No internal connection

See page 613

16841

20-BIT BUS INTERFACE D-TYPE LATCHES WITH 3-STATE OUTPUTS

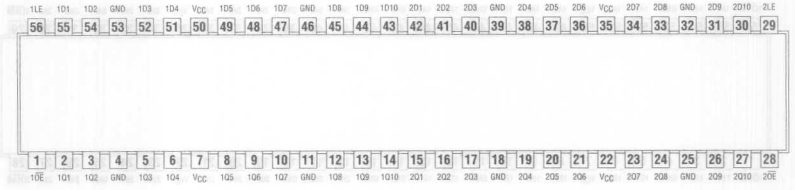

See page 614

16843

18-BIT BUS INTERFACE D-TYPE LATCHES WITH 3-STATE OUTPUTS

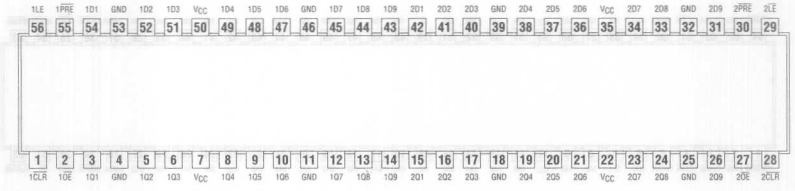

See page 615

16853

DUAL 8-BIT TO 9-BIT PARITY BUS TRANSCEIVERS

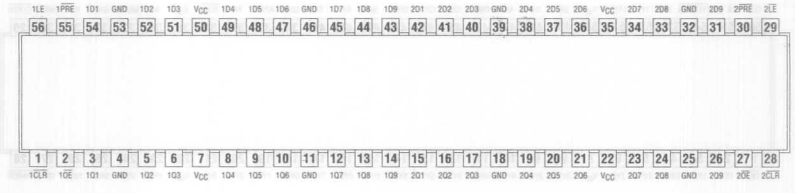

See page 616

16861

20-BIT BUS TRANSCEIVERS WITH 3-STATE OUTPUTS

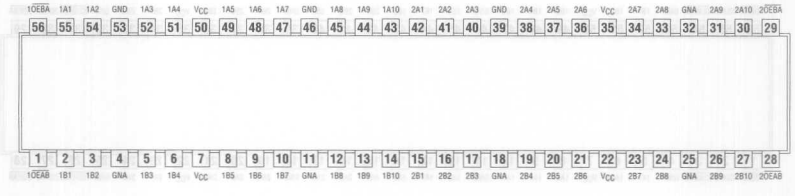

See page 618

16863

18-BIT BUS TRANSCEIVERS WITH 3-STATE OUTPUTS

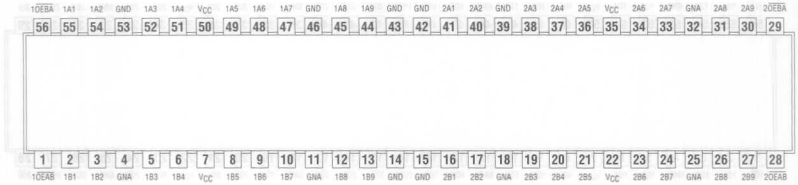

See page 619

16901

18-BIT UNIVERSAL BUS TRANSCEIVER WITH PARITY GENERATORS/CHECKERS

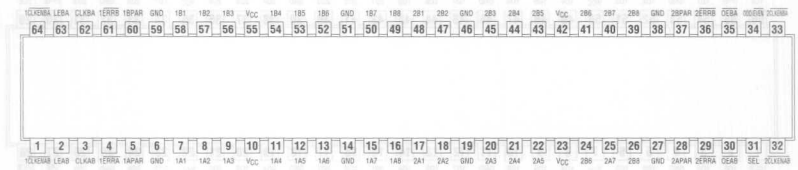

See page 620

16903

3.3-V 12-BIT UNIVERSAL BUS DRIVER WITH PARITY CHECKER AND DUAL 3-STATE OUTPUTS

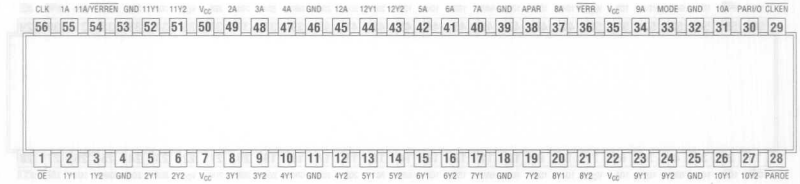

See page 622

16952

16-BIT REGISTERED TRANSCEIVERS WITH 3-STATE OUTPUTS

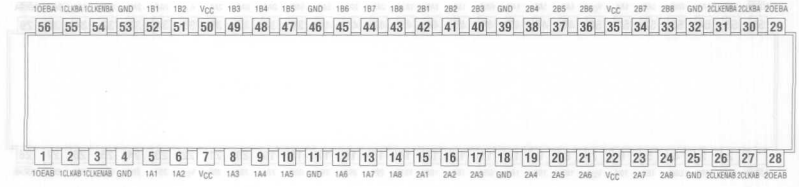

See page 624

Pin Assignments

25244
25-Ω OCTAL BUS BUFFERS/DRIVERS WITH 3-STATE OUTPUTS

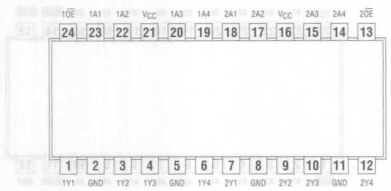

See page 626

25245
25-Ω OCTAL BUS TRANSCEIVERS WITH 3-STATE OUTPUTS

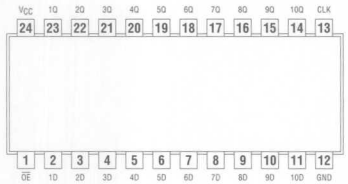

See page 627

25642
25-Ω OCTAL BUS TRANSCEIVER

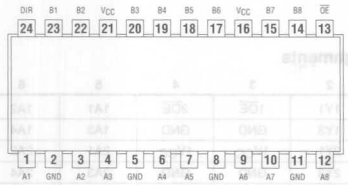

See page 628

29821
10-BIT BUS-INTERFACE FLIP-FLOPS WITH 3-STATE OUTPUTS

See page 629

29825
8-BIT BUS-INTERFACE FLIP-FLOPS WITH 3-STATE OUTPUTS

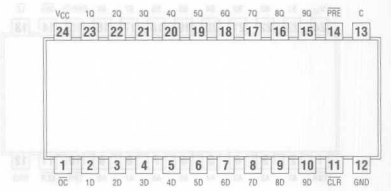

See page 630

29827
29828
10-BIT BUFFERS AND BUS DRIVERS WITH 3-STATE OUTPUTS

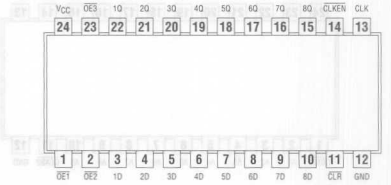

See page 631, 632

29841
10-BIT BUS INTERFACE D-TYPE LATCHES WITH 3-STATE OUTPUTS

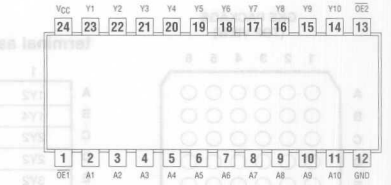

See page 633

29843
9-BIT BUS INTERFACE D-TYPE LATCHES WITH 3-STATE OUTPUTS

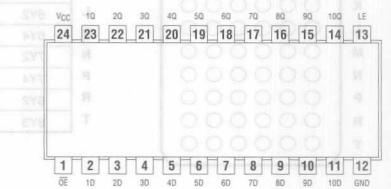

See page 634

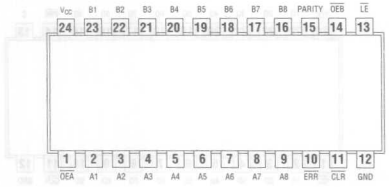

See page 636

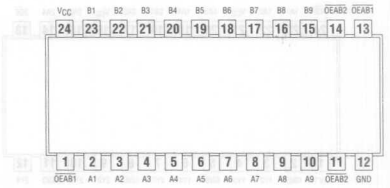

See page 639

29863

9-BIT BUS TRANSCEIVERS WITH 3-STATE OUTPUTS

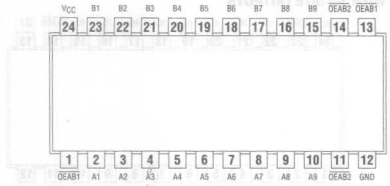

See page 638

32240

32-BIT BUFFER/DRIVER

GKE PACKAGE
(TOP VIEW)

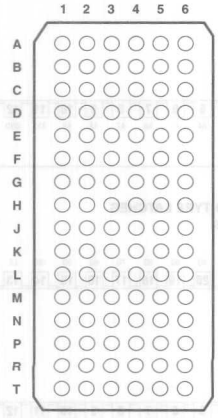

terminal assignments

	1	2	3	4	5	6
A	1Y2	1Y1	$1\overline{OE}$	$2\overline{OE}$	1A1	1A2
B	1Y4	1Y3	GND	GND	1A3	1A4
C	2Y2	2Y1	$1V_{CC}$	$1V_{CC}$	2A1	2A2
D	2Y2	2Y3	GND	GND	2A3	2A4
E	3Y2	3Y1	GND	GND	3A1	3A2
F	3Y4	3Y3	$1V_{CC}$	$1V_{CC}$	3A3	3A4
G	4Y2	4Y1	GND	GND	4A1	4A2
H	4Y3	4Y4	$4\overline{OE}$	$3\overline{OE}$	4A4	4A3
J	5Y2	5Y1	$5\overline{OE}$	$6\overline{OE}$	5A1	5A2
K	5Y4	5Y3	GND	GND	5A3	5A4
L	6Y2	6Y1	$2V_{CC}$	$2V_{CC}$	6A1	6A2
M	6Y4	6Y3	GND	GND	6A3	6A4
N	7Y2	7Y1	GND	GND	7A1	7A2
P	7Y4	7Y3	$2V_{CC}$	$2V_{CC}$	7A3	7A4
R	8Y2	8Y1	GND	GND	8A1	8A2
T	8Y3	8Y4	$8\overline{OE}$	$7\overline{OE}$	8A4	8A3

See page 640

32244

36-BIT BUFFER/DRIVER WITH 3-STATE OUTPUTS

GKE PACKAGE
(TOP VIEW)

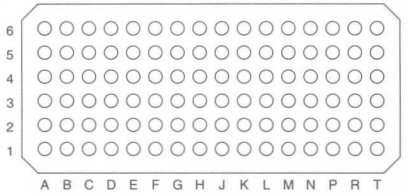

6	1A2	1A4	2A2	2A4	3A2	3A4	4A2	4A3	5A2	5A4	6A2	6A4	7A2	7A4	8A2	8A3
5	1A1	1A3	2A1	2A3	3A1	3A3	4A1	4A4	5A1	5A3	6A1	6A3	7A1	7A3	8A1	8A4
4	$2\overline{OE}$	GND	V_{CC}	GND	GND	V_{CC}	GND	$3\overline{OE}$	$6\overline{OE}$	GND	V_{CC}	GND	GND	V_{CC}	GND	$7\overline{OE}$
3	$1\overline{OE}$	GND	V_{CC}	GND	GND	V_{CC}	GND	$4\overline{OE}$	5DIR	GND	V_{CC}	GND	GND	V_{CC}	GND	8DIR
2	1Y1	1Y3	2Y1	2Y3	3Y1	3Y3	4Y1	4Y4	5Y1	5Y3	6Y1	6Y3	7Y1	7Y3	8Y1	8Y4
1	1Y2	1Y4	2Y2	2Y4	3Y2	3Y4	4Y2	4Y3	5Y2	5Y4	6Y2	6Y4	7Y2	7Y4	8Y2	8Y3
	A	B	C	D	E	F	G	H	J	K	L	M	N	P	R	T

See page 642

32245

36-BIT BUS TRANSCEIVER
WITH 3-STATE OUTPUTS

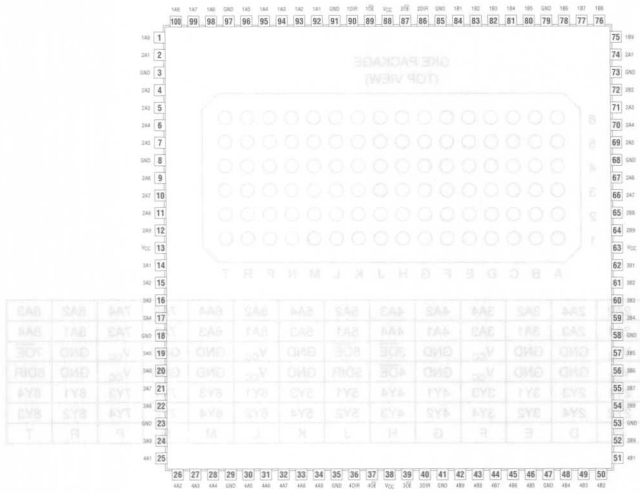

See page 644

32245

36-BIT BUS TRANSCEIVER
WITH 3-STATE OUTPUTS

GKE PACKAGE
(TOP VIEW)

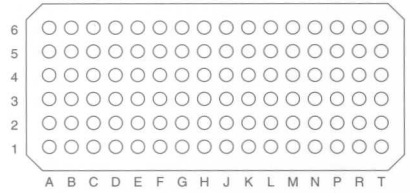

6	1A2	1A4	1A6	1A8	2A2	2A4	2A6	2A7	3A2	3A4	3A6	3A8	4A2	4A4	4A6	4A7
5	1A1	1A3	1A5	1A7	2A1	2A3	2A5	2A8	3A1	3A3	3A5	3A7	4A1	4A3	4A5	4A8
4	$1\overline{OE}$	GND	V_{CC}	GND	GND	V_{CC}	GND	$2\overline{OE}$	$3\overline{OE}$	GND	V_{CC}	GND	GND	V_{CC}	GND	$4\overline{OE}$
3	1DIR	GND	V_{CC}	GND	GND	V_{CC}	GND	2DIR	3DIR	GND	V_{CC}	GND	GND	V_{CC}	GND	4DIR
2	1B1	1B3	1B5	1B7	2B1	2B3	2B5	2B8	3B1	3B3	3B5	3B7	4B1	4B3	4B5	4B8
1	1B2	1B4	1B6	1B8	2B2	2B4	2B6	2B7	3B2	3B4	3B6	3B8	4B2	4B4	4B6	4B7
	A	B	C	D	E	F	G	H	J	K	L	M	N	P	R	T

See page 644

32316

16-BIT TRI-PORT UNIVERSAL BUS EXCHANGERS

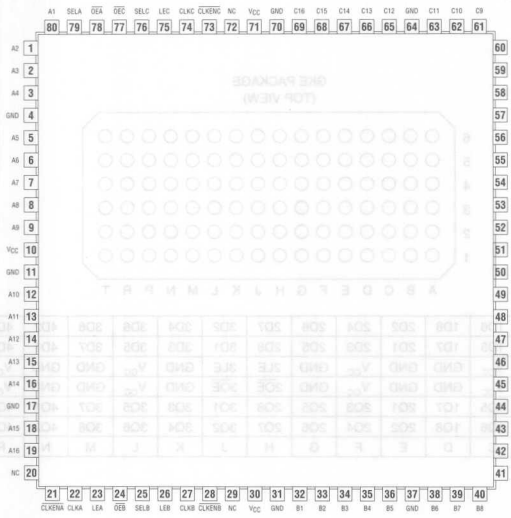

NC – No internal connection

See page 646

32318

18-BIT TRI-PORT UNIVERSAL BUS EXCHANGERS

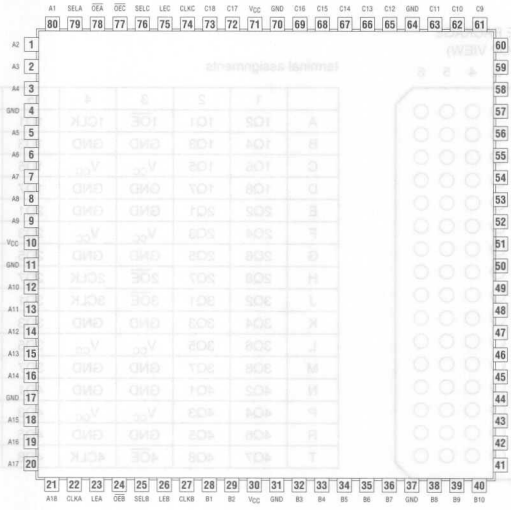

See page 648

32373

32-BIT TRANSPARENT D-TYPE LATCH WITH 3-STATE OUTPUTS

GKE PACKAGE
(TOP VIEW)

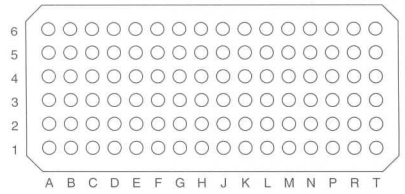

6	1D2	1D4	1D6	1D8	2D2	2D4	2D6	2D7	3D2	3D4	3D6	3D8	4D2	4D4	4D6	4D7
5	1D1	1D3	1D5	1D7	2D1	2D3	2D5	2D8	3D1	3D3	3D5	3D7	4D1	4D3	4D5	4D8
4	1LE	GND	V_{CC}	GND	GND	V_{CC}	GND	2LE	3LE	GND	V_{CC}	GND	GND	V_{CC}	GND	4LE
3	$1\overline{OE}$	GND	V_{CC}	GND	GND	V_{CC}	GND	$2\overline{OE}$	$3\overline{OE}$	GND	V_{CC}	GND	GND	V_{CC}	GND	$4\overline{OE}$
2	1Q1	1Q3	1Q5	1Q7	2Q1	2Q3	2Q5	2Q8	3Q1	3Q3	3Q5	3Q7	4Q1	4Q3	4Q5	4Q8
1	1Q2	1Q4	1Q6	1Q8	2Q2	2Q4	2Q6	2Q7	3Q2	3Q4	3Q6	3Q8	4Q2	4Q4	4Q6	4Q7
	A	B	C	D	E	F	G	H	J	K	L	M	N	P	R	T

See page 650

32374

32-BIT EDGE-TRIGGERED D-TYPE FLIP-FLOP WITH 3-STATE OUTPUTS

GKE PACKAGE
(TOP VIEW)

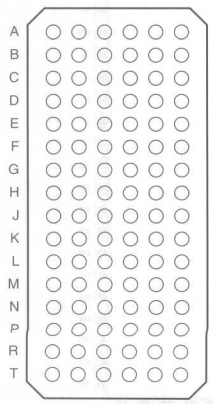

terminal assignments

	1	2	3	4	5	6
A	1Q2	1Q1	$1\overline{OE}$	1CLK	1D1	1D2
B	1Q4	1Q3	GND	GND	1D3	1D4
C	1Q6	1Q5	V_{CC}	V_{CC}	1D5	1D6
D	1Q8	1Q7	GND	GND	1D7	1D8
E	2Q2	2Q1	GND	GND	2D1	2D2
F	2Q4	2Q3	V_{CC}	V_{CC}	2D3	2D4
G	2Q6	2Q5	GND	GND	2D5	2D6
H	2Q8	2Q7	$2\overline{OE}$	2CLK	2D7	2D8
J	3Q2	3Q1	$3\overline{OE}$	3CLK	3D1	3D2
K	3Q4	3Q3	GND	GND	3D3	3D4
L	3Q6	3Q5	V_{CC}	V_{CC}	3D5	3D6
M	3Q8	3Q7	GND	GND	3D7	3D8
N	4Q2	4Q1	GND	GND	4D1	4D2
P	*4Q4*	*4Q3*	V_{CC}	V_{CC}	*4D3*	*4D4*
R	4Q6	4Q5	GND	GND	4D5	4D6
T	4Q7	4Q8	$4\overline{OE}$	4CLK	4D8	4D7

See page 652

32501

36-BIT UNIVERSAL BUS TRANSCEIVERS WITH 3-STATE OUTPUTS

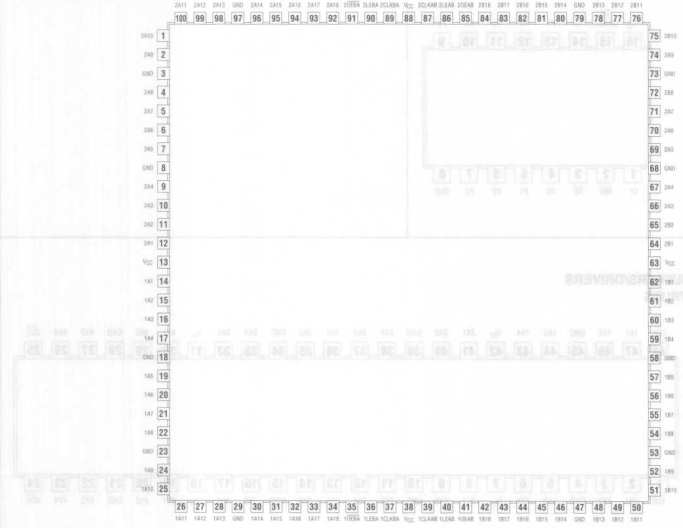

See page 654

32543

36-BIT REGISTERED BUS TRANSCEIVERS WITH 3-STATE OUTPUTS

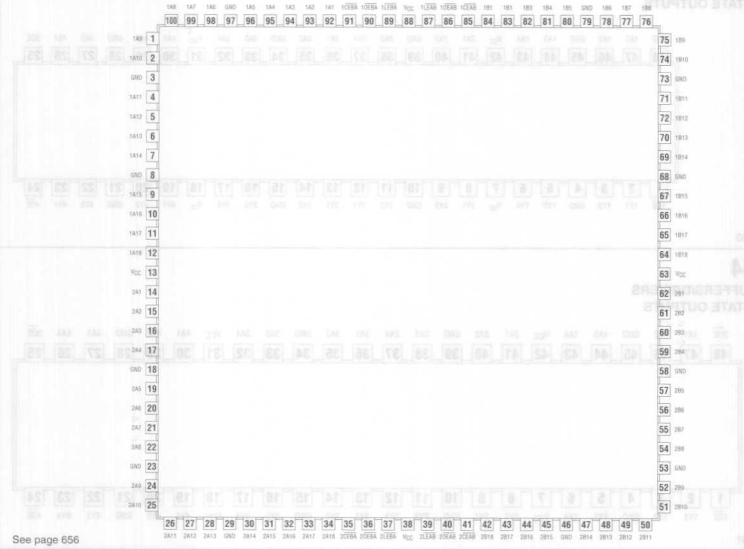

See page 656

40103

8-STAGE SYNCHRONOUS DOWN COUNTERS

See page 658

162240

3.3-V ABT 16-BIT BUFFERS/DRIVERS WITH 3-STATE OUTPUTS

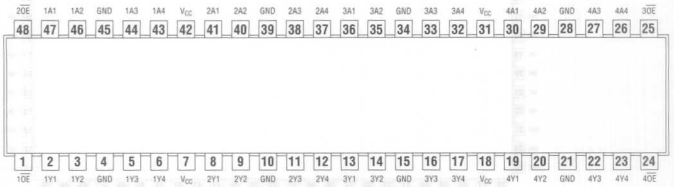

See page 659

162241

3.3-V ABT 16-BIT BUFFERS/DRIVERS WITH 3-STATE OUTPUTS

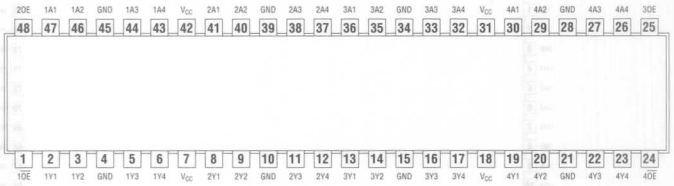

See page 660

162244

16-BIT BUFFERS/DRIVERS WITH 3-STATE OUTPUTS

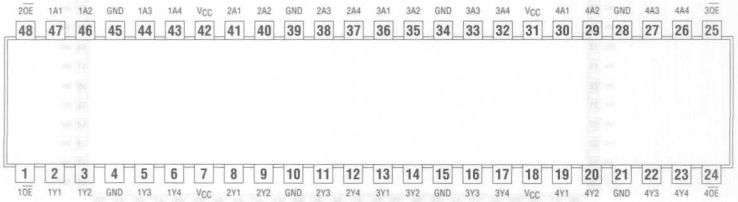

See page 661

162245

16-BIT TRANSCEIVER
WITH 3-STATE OUTPUTS

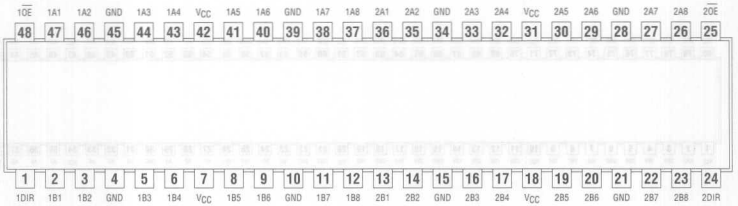

See page 662

162260

12-BIT TO 24-BIT MULTIPLEXED D-TYPE LATCH
WITH 3-STATE OUTPUTS

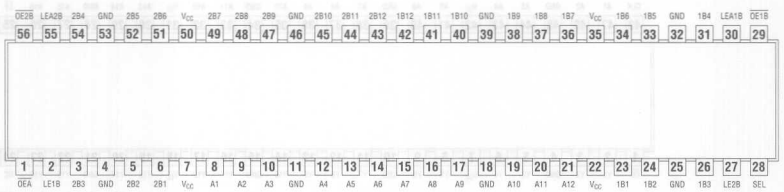

See page 664

162268

12-BIT TO 24-BIT REGISTERED BUS EXCHANGER
WITH 3-STATE OUTPUTS

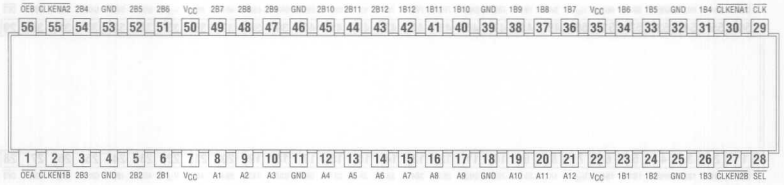

See page 666

162280

16-BIT TO 32-BIT REGISTERED BUS EXCHANGER
WITH BYTE MASKS AND 3-STATE OUTPUTS

See page 668

162282

18-BIT TO 36-BIT REGISTERED BUS EXCHANGER WITH 3-STATE OUTPUTS

See page 670

162334

16-BIT UNIVERSAL BUS DRIVER WITH 3-STATE OUTPUTS

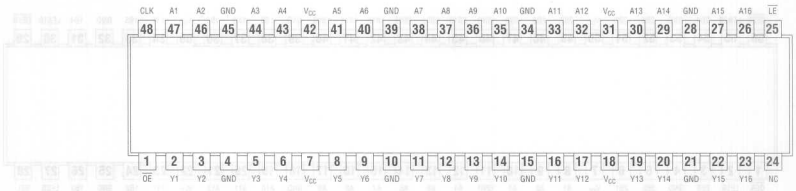

NC – No internal connection

See page 672

162344

1-BIT TO 4-BIT ADDRESS DRIVER WITH 3-STATE OUTPUTS

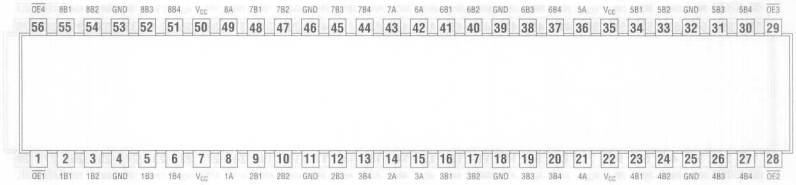

See page 674

162373

3.3-V ABT 16-BIT TRANSPARENT D-TYPE LATCHES WITH 3-STATE OUTPUTS

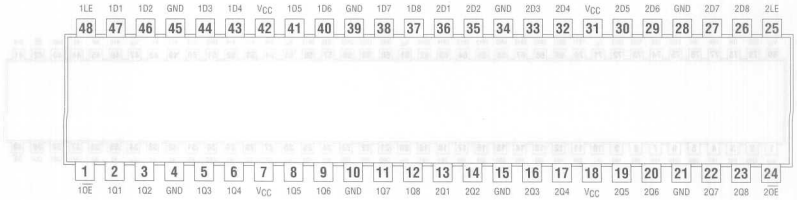

See page 676

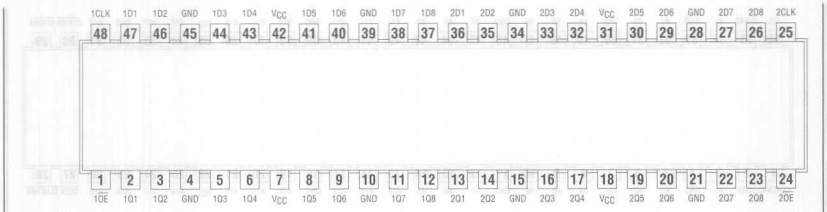

See page 677

162460

4-TO-1 MULTIPLEXED/DEMULTIPLEXED REGISTERED TRANSCEIVERS WITH 3-STATE OUTPUTS

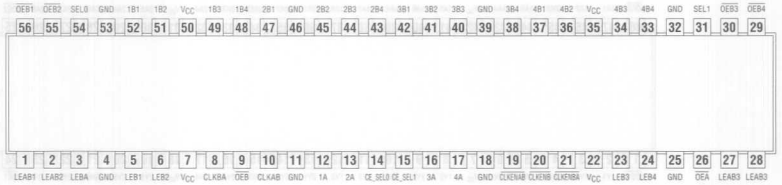

See page 678

162500

18-BIT UNIVERSAL BUS TRANSCEIVER WITH 3-STATE OUTPUTS

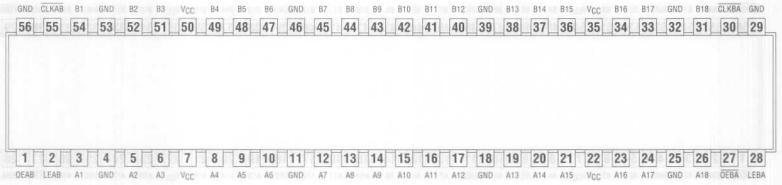

See page 680

162501

18-BIT UNIVERSAL BUS TRANSCEIVERS WITH 3-STATE OUTPUTS

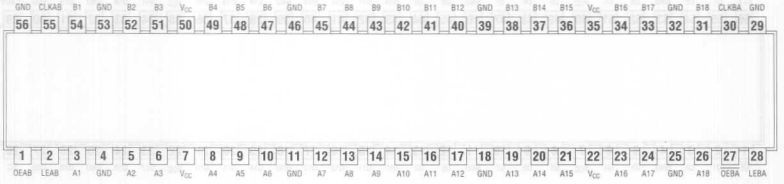

See page 682

Pin Assignments

162525

16-BIT REGISTERED BUS TRANSCEIVER WITH 3-STATE OUTPUTS

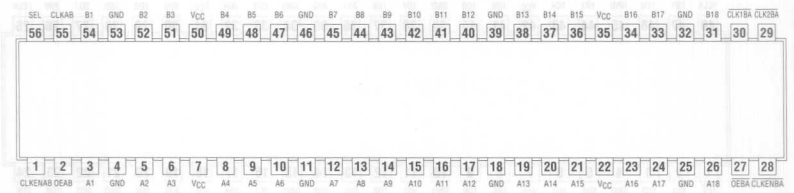

See page 684

162541

3.3-V ABT 16-BIT BUFFERS/DRIVERS WITH 3-STATE OUTPUTS

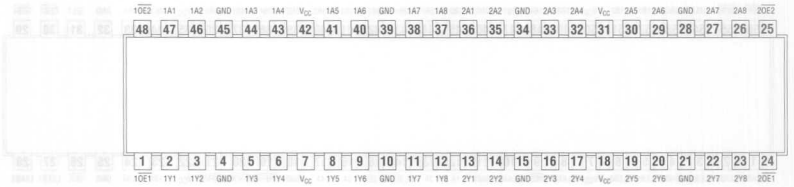

See page 686

162601

18-BIT UNIVERSAL BUS TRANSCEIVER WITH 3-STATE OUTPUTS

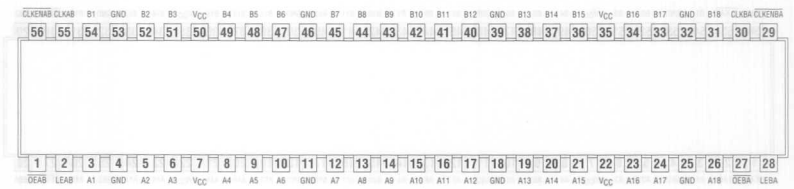

See page 688

162721

3.3-V 20-BIT FLIP-FLOP WITH 3-STATE OUTPUTS

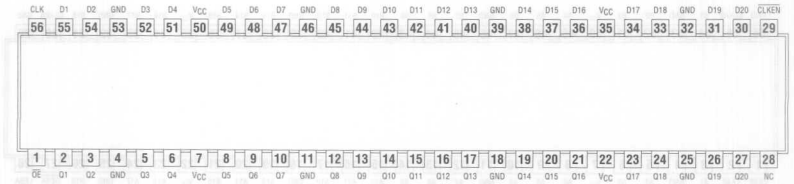

NC – No internal connection

See page 690

Pin Assignments

162820

3.3-V 10-BIT FLIP-FLOP WITH DUAL OUTPUTS AND 3-STATE OUTPUTS

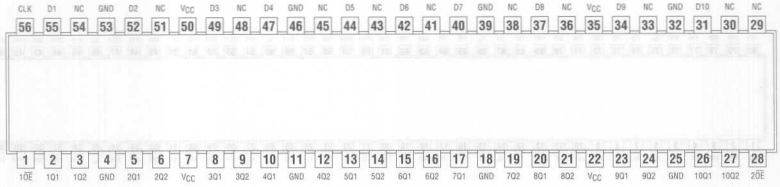

NC – No internal connection

See page 691

162823

18-BIT BUS-INTERFACE FLIP-FLOPS WITH 3-STATE OUTPUTS

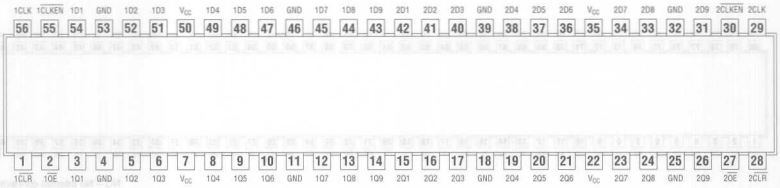

See page 692

162825

18-BIT BUFFERS/DRIVERS WITH 3-STATE OUTPUTS

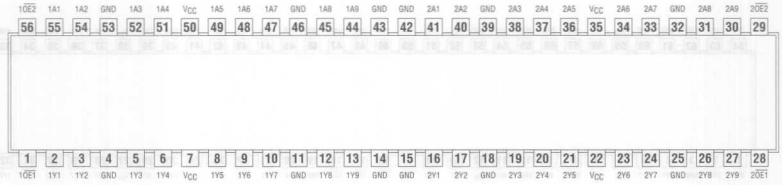

See page 693

162827

20-BIT BUS BUFFERS/DRIVERS WITH 3-STATE OUTPUTS

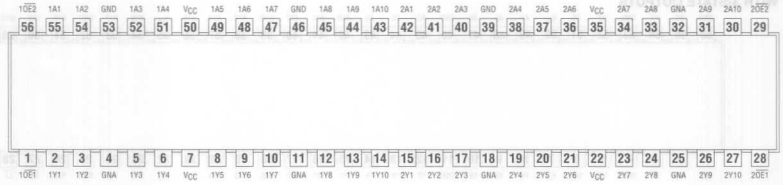

See page 694

162830

1-BIT to 2-BIT ADDRESS DRIVER
WITH 3-STATE OUTPUTS

See page 695

162831

1-BIT TO 4-BIT ADDRESS REGISTER/DRIVER
WITH 3-STATE OUTPUTS

NC – No internal connection

See page 696

162832

1-BIT TO 4-BIT ADDRESS REGISTER/DRIVER
WITH 3-STATE OUTPUTS

See page 697

162834
162835

18-BIT UNIVERSAL BUS DRIVER
WITH 3-STATE OUTPUTS

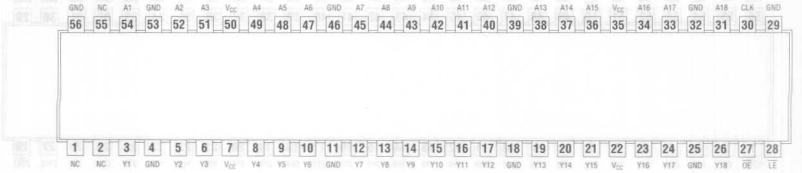

NC – No internal connection

See page 698, 699

162836

20-BIT UNIVERSAL BUS DRIVER
WITH 3-STATE OUTPUTS

CLK	A1	A2	GND	A3	A4	V_{CC}	A5	A6	A7	GND	A8	A9	A10	A11	A12	A13	GND	A14	A15	A16	V_{CC}	A17	A18	GND	A19	A20	$\overline{LE}$
56	55	54	53	52	51	50	49	48	47	46	45	44	43	42	41	40	39	38	37	36	35	34	33	32	31	30	29

1	2	3	4	5	6	7	8	9	10	11	12	13	14	15	16	17	18	19	20	21	22	23	24	25	26	27	28
$\overline{OE}$	Y1	Y2	GND	Y3	Y4	V_{CC}	Y5	Y6	Y7	GND	Y8	Y9	Y10	Y11	Y12	Y13	GND	Y14	Y15	Y16	V_{CC}	Y17	Y18	GND	Y19	Y20	NC

NC – No internal connection

See page 700

162841

20-BIT BUS-INTERFACE D-TYPE LATCH
WITH 3-STATE OUTPUTS

1LE	1D1	1D2	GND	1D3	1D4	V_{CC}	1D5	1D6	1D7	GND	1D8	1D9	1D10	2D1	2D2	2D3	GND	2D4	2D5	2D6	V_{CC}	2D7	2D8	GND	2D9	2D10	2LE
56	55	54	53	52	51	50	49	48	47	46	45	44	43	42	41	40	39	38	37	36	35	34	33	32	31	30	29

1	2	3	4	5	6	7	8	9	10	11	12	13	14	15	16	17	18	19	20	21	22	23	24	25	26	27	28
$\overline{1OE}$	1Q1	1Q2	GND	1Q3	1Q4	V_{CC}	1Q5	1Q6	1Q7	GND	1Q8	1Q9	1Q10	2Q1	2Q2	2Q3	GND	2Q4	2Q5	2Q6	V_{CC}	2Q7	2Q8	GND	2Q9	2Q10	$\overline{2OE}$

See page 701

164245

16-BIT TRANSCEIVER AND 3.3-V TO 5-V SHIFTER
WITH 3-STATE OUTPUTS

$\overline{1OE}$	1A1	1A2	GND	1A3	1A4	(3.3V)V_{CCA}	1A5	1A6	GND	1A7	1A8	2A1	2A2	GND	2A3	2A4	(3.3V)V_{CCA}	2A5	2A6	GND	2A7	2A8	$\overline{2OE}$
48	47	46	45	44	43	42	41	40	39	38	37	36	35	34	33	32	31	30	29	28	27	26	25

1	2	3	4	5	6	7	8	9	10	11	12	13	14	15	16	17	18	19	20	21	22	23	24
1DIR	1B1	1B2	GND	1B3	1B4	(5V)V_{CCB}	1B5	1B6	GND	1B7	1B8	2B1	2B2	GND	2B3	2B4	(5V)V_{CCB}	2B5	2B6	GND	2B7	2B8	2DIR

See page 702

322374

3.3-V ABT 32-BIT EDGE-TRIGGERED D-TYPE FLIP-FLOP WITH 3-STATE OUTPUTS

GKE PACKAGE
(TOP VIEW)

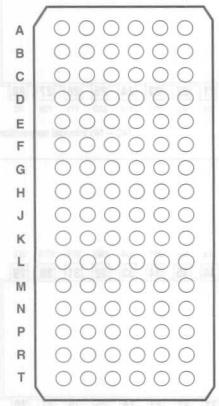

terminal assignments

	1	2	3	4	5	6
A	1Q2	1Q1	$1\overline{OE}$	1CLK	1D1	1D2
B	1Q4	1Q3	GND	GND	1D3	1D4
C	1Q6	1Q5	V_{CC}	V_{CC}	1D5	1D6
D	1Q8	1Q7	GND	GND	1D7	1D8
E	2Q2	2Q1	GND	GND	2D1	2D2
F	2Q4	2Q3	V_{CC}	V_{CC}	2D3	2D4
G	2Q6	2Q6	GND	GND	2D5	2D6
H	2Q7	2Q8	$2\overline{OE}$	2CLK	2D8	2D7
J	3Q2	3Q1	$3\overline{OE}$	3CLK	3D1	3D2
K	3Q4	3Q3	GND	GND	3D3	3D4
L	3Q6	3Q5	V_{CC}	V_{CC}	3D5	3D6
M	3Q8	3Q7	GND	GND	3D7	3D8
N	4Q2	4Q1	GND	GND	4D1	4D2
P	4Q4	4Q3	V_{CC}	V_{CC}	4D3	4D4
R	4Q6	4Q5	GND	GND	4D5	4D6
T	4Q7	4Q8	$4\overline{OE}$	4CLK	4D8	4D7

NC – No internal connection

See page 703

FUNCTION AND ELECTRICAL CHARACTERISTICS

FUNCTION AND ELECTRICAL CHARACTERISTICS

00

QUADRUPLE 2-INPUT POSITIVE-NAND GATES

- $Y = \overline{A \bullet B}$
- 74AC11xxx: Product Available in Reduced-Noise Advanced CMOS (11000 Series)
- 74ACT11xxx: Product Available in Reduced-Noise Advanced CMOS (11000 Series)

Logic Diagram

RECOMMENDED OPERATING CONDITIONS

PARAMETER	MAX or MIN	TTL	LS	S	ALS	AS	F	SN74 HC	CD74 HC	SN74 HCT	CD74 HCT	AC 11	SN74 AC	CD74 AC	ACT 11	UNIT
I_{CC}	MAX	22	4.4	36	3	17.4	10.2	0.02	0.04	0.02	0.04	0.04	0.02	0.08	0.04	mA
I_{OH}	MAX	-0.4	-0.4	-1	-0.4	-2	-1	-4	-4	-4	-4	-24	-24	-24	-24	mA
I_{OL}	MAX	16	8	20	8	20	20	4	4	4	4	24	24	24	24	mA

PARAMETER	MAX or MIN	SN74 ACT	CD74 ACT	AHC	AHCT	LV 3V	LV 5V	LVC 3V	ALVC 3V	UNIT
I_{CC}	MAX	0.02	0.08	0.02	0.02	-	0.02	0.01	0.01	mA
I_{OH}	MAX	-24	-24	-8	-8	-6	-12	-24	-24	mA
I_{OL}	MAX	24	24	8	8	6	12	24	24	mA

SWITCHING CHARACTERISTICS

PARAMETER	INPUT	OUTPUT	MAX or MIN	TTL	LS	S	ALS	AS	F	SN74 HC	CD74 HC	SN74 HCT	CD74 HCT	AC 11	SN74 AC	CD74 AC	ACT 11
t_{PLH}	A or B	Y	MAX	22	15	4.5	11	4.5	6	23	27	25	30	7.4	8.5	7.3	12.3
t_{PHL}	A or B	Y	MAX	15	15	5	8	4	5.3	23	27	25	30	6.8	7	7.3	8.8

PARAMETER	INPUT	OUTPUT	MAX or MIN	SN74 ACT	CD74 ACT	AHC	AHCT	LV 3V	LV 5V	LVC 3V	ALVC 3V
t_{PLH}	A or B	Y	MAX	9.5	10.8	8.5	9	13	8.5	4.3	3
t_{PHL}	A or B	Y	MAX	8	13.2	8.5	9	13	8.5	4.3	3

UNIT:ns

PRODUCTION DATA information is current as of publication date. Products conform to specifications per the terms of Texas Instruments standard warranty. Production processing does not necessarily include testing of all parameters. See www.ti.com/sc/logic for the most current data sheets.

01

QUADRUPLE 2-INPUT POSITIVE-NAND GATES WITH OPEN-COLLECTOR OUTPUTS

● $Y = \overline{A \bullet B}$

Logic Diagram

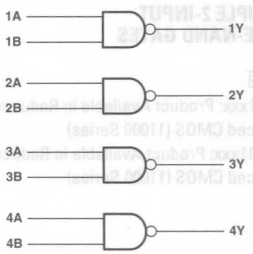

RECOMMENDED OPERATING CONDITIONS

PARAMETER	MAX or MIN	TTL	LS	ALS	HC	UNIT
I_{CC}	MAX	22	4.4	3	0.02	mA
V_{OH}	MAX	5.5	5.5	5.5	V_{CC}	V
I_{OL}	MAX	16	8	8	4	mA

SWITCHING CHARACTERISTICS

PARAMETER	INPUT	OUTPUT	MAX or MIN	TTL	LS	ALS	HC
t_{PLH}	A or B	Y	MAX	55	32	54	31
t_{PHL}	A or B	Y	MAX	15	28	28	25

UNIT:ns

▨: *OBSOLETED or NOT RECOMMENDED NEW DESIGNS*

02

QUADRUPLE 2-INPUT POSITIVE-NOR GATES

Logic Diagram

- $Y = \overline{A + B}$
- 74AC11xxx: Product Available in Reduced-Noise Advanced CMOS (11000 Series)
- 74ACT11xxx: Product Available in Reduced-Noise Advanced CMOS (11000 Series)

RECOMMENDED OPERATING CONDITIONS

PARAMETER	MAX or MIN	TTL	LS	S	ALS	AS	F	SN74 HC	CD74 HC	SN74 HCT	CD74 HCT	AC 11	CD74 AC	ACT 11	UNIT
I_{CC}	MAX	27	5.4	45	4	20.1	13	0.02	0.04	0.02	0.04	0.04	0.08	0.04	mA
I_{OH}	MAX	-0.4	-0.4	-1	-0.4	-2	-1	-4	-4	-4	-4	-24	-24	-24	mA
I_{OL}	MAX	16	8	20	8	20	20	4	4	4	4	24	24	24	mA

PARAMETER	MAX or MIN	CD74 ACT	AHC	AHCT	LV 3V	LV 5V	LVC 3V	UNIT
I_{CC}	MAX	0.08	0.02	0.02	-	0.02	0.01	mA
I_{OH}	MAX	-24	-8	-8	-6	-12	-24	mA
I_{OL}	MAX	24	8	8	6	12	24	mA

SWITCHING CHARACTERISTICS

PARAMETER	INPUT	OUTPUT	MAX or MIN	TTL	LS	S	ALS	AS	F	SN74 HC	CD74 HC	SN74 HCT	CD74 HCT	AC 11	CD74 AC	ACT 11
t_{PLH}	A or B	Y	MAX	22	15	5.5	12	4.5	6.5	23	27	25	32	6.9	11.5	10.6
t_{PHL}	A or B	Y	MAX	15	15	5.5	10	4.5	5.3	23	27	25	32	6.4	11.5	8.7

PARAMETER	INPUT	OUTPUT	MAX or MIN	CD74 ACT	AHC	AHCT	LV 3V	LV 5V	LVC 3V
t_{PLH}	A or B	Y	MAX	12.2	8.5	8.5	13	8.5	4.4
t_{PHL}	A or B	Y	MAX	12.2	8.5	8.5	13	8.5	4.4

UNIT: ns

$Y = A \cdot B$

RECOMMENDED OPERATING CONDITIONS

PARAMETER	MAX or MIN	TTL	LS	S	ALS	SN74 HC	CD74 HC	CD74 HCT	UNIT
I_{CC}	MAX	22	4.4	36	4	0.02	0.04	0.04	mA
V_{OH}	MAX	5.5	8	5.5	8	0.05	V_{CC}	V_{CC}	V
I_{OL}	MAX	16	0.1	20	0.1	4	4	4	mA

SWITCHING CHARACTERISTICS

PARAMETER	INPUT	OUTPUT	MAX or MIN	TTL	LS	S	ALS	SN74 HC	CD74 HC	CD74 HCT
t_{PLH}	A or B	Y	MAX	45	32	7.5	50	31	30	36
t_{PHL}	A or B	Y	MAX	15	28	7	13	25	30	36

UNIT: ns

04

HEX INVERTERS

Logic Diagram

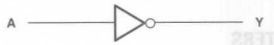

- $Y = \overline{A}$
- 74AC11xxx: Product Available in Reduced-Noise Advanced CMOS (11000 Series)
- 74ACT11xxx: Product Available in Reduced-Noise Advanced CMOS (11000 Series)

RECOMMENDED OPERATING CONDITIONS

PARAMETER	MAX or MIN	TTL	LS	S	ALS	AS	F	SN74 HC	CD74 HC	SN74 HCT	CD74 HCT	AC 11	SN74 AC	CD74 AC	ACT 11	UNIT
I_{CC}	MAX	33	6.6	54	4.2	26.3	15.3	0.02	0.04	0.02	0.04	0.04	0.02	0.08	0.04	mA
I_{OH}	MAX	-0.4	-0.4	-1	-0.4	-2	-1	-4	-4	-4	-4	-24	-24	-24	-24	mA
I_{OL}	MAX	16	8	20	8	20	20	4	4	4	4	24	24	24	24	mA

PARAMETER	MAX or MIN	SN74 ACT	CD74 ACT	AHC	AHCT	LV 3V	LV 5V	LVC 3V	ALVC 3V	UNIT
I_{CC}	MAX	0.02	0.08	0.02	0.02	-	0.02	0.01	0.01	mA
I_{OH}	MAX	-24	-24	-8	-8	-6	-12	-24	-24	mA
I_{OL}	MAX	24	24	8	8	6	12	24	24	mA

SWITCHING CHARACTERISTICS

PARAMETER	INPUT	OUTPUT	MAX or MIN	TTL	LS	S	ALS	AS	F	SN74 HC	CD74 HC	SN74 HCT	CD74 HCT	AC 11	SN74 AC	CD74 AC	ACT 11
t_{PLH}	A or B	Y	MAX	22	15	4.5	11	5	6	24	26	25	29	7.1	7.5	6.5	9.7
t_{PHL}	A or B	Y	MAX	15	15	5	8	4	5.3	24	26	25	29	6	7	6.5	9.6

PARAMETER	INPUT	OUTPUT	MAX or MIN	SN74 ACT	CD74 ACT	AHC	AHCT	LV 3V	LV 5V	LVC 3V	ALVC 3V
t_{PLH}	A or B	Y	MAX	9	9.3	8.5	8.5	12	8.5	4.5	2.8
t_{PHL}	A or B	Y	MAX	8.5	9.3	8.5	8.5	12	8.5	4.5	2.8

UNIT: ns

PRODUCTION DATA information is current as of publication date. Products conform to specifications per the terms of Texas Instruments standard warranty. Production processing does not necessarily include testing of all parameters. See www.ti.com/sc/logic for the most current data sheets.

U04

HEX INVERTERS

- $Y = \overline{A}$
- Unbuffered Output

Logic Diagram

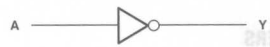

RECOMMENDED OPERATING CONDITIONS

PARAMETER	MAX or MIN	SN74 HC	CD74 HC	AHC	LV 3V	LV 5V	LVC 3V	UNIT
I_{CC}	MAX	0.02	0.04	0.02	-	0.02	0.01	mA
I_{OH}	MAX	-4	-4	-8	-6	-12	-24	mA
I_{OL}	MAX	4	4	8	6	12	24	mA

SWITCHING CHARACTERISTICS

PARAMETER	INPUT	OUTPUT	MAX or MIN	SN74 HC	CD74 HC	AHC	LV 3V	LV 5V	LVC 3V
t_{PLH}	A or B	Y	MAX	20	21	8	13	8	3.8
t_{PHL}	A or B	Y	MAX	20	21	8	13	8	3.8

UNIT: ns

05

HEX INVERTERS WITH OPEN-COLLECTOR OUTPUTS

- $Y = \overline{A}$

Logic Diagram

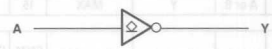

RECOMMENDED OPERATING CONDITIONS

PARAMETER	MAX or MIN	TTL	LS	S	ALS	SN74 HC	CD74 AC	CD74 ACT	AHC	LV 3V	LV 5V	UNIT
I_{CC}	MAX	33	6.6	54	4.2	0.02	0.08	0.08	0.02	-	0.02	mA
I_{OH}	MAX	-	-	-	-	-	-24	-24	-	-	-	mA
V_{OH}	MAX	5.5	5.5	5.5	5.5	5.5	5.5	5.5	Vcc	5.5	5.5	V
I_{OL}	MAX	16	8	20	8	4	24	24	8	6	12	mA

SWITCHING CHARACTERISTICS

PARAMETER	INPUT	OUTPUT	MAX or MIN	TTL	LS	S	ALS	SN74 HC	CD74 AC	CD74 ACT	AHC	LV 3V	LV 5V
t_{PLH}	A or B	Y	MAX	55	32	7.5	54	29	-	-	-	12	8.5
t_{PHL}	A or B	Y	MAX	15	28	7	14	21	-	-	-	12	8.5
t_{PLZ}	A	Y	MAX	-	-	-	-	-	8.2	9.3	8.5	-	-
t_{PZL}	A	Y	MAX	-	-	-	-	-	6.5	10.8	8.5	-	-

UNIT: ns

: OBSOLETED or NOT RECOMMENDED NEW DESIGNS

06

HEX INVERTER BUFFERS/DRIVERS WITH OPEN-COLLECTOR HIGH-VOLTAGE OUTPUTS

● $Y = \overline{A}$

Logic Diagram

RECOMMENDED OPERATING CONDITIONS

PARAMETER	MAX or MIN	TTL	LS	LV 3V	LV 5V	LVC 3V	UNIT
I_{CC}	MAX	51	60	-	0.02	0.01	mA
I_{OH}	MAX	0.25	0.25	-	±0.0025	-	mA
V_{OH}	MAX	30	30	5.5	5.5	5.5	V
I_{OL}	MAX	40	40	8	16	24	mA

SWITCHING CHARACTERISTICS

PARAMETER	INPUT	OUTPUT	MAX or MIN	TTL	LS	LV 3V	LV 5V	LVC 3V
t_{PLH}	A or B	Y	MAX	15	15	12	8.5	3.7
t_{PHL}	A or B	Y	MAX	23	20	12	8.5	3.7

UNIT: ns

07

HEX BUFFERS/DRIVERS WITH OPEN-COLLECTOR HIGH-VOLTAGE OUTPUTS

● $Y = A$

Logic Diagram

RECOMMENDED OPERATING CONDITIONS

PARAMETER	MAX or MIN	TTL	LS	LV 3V	LV 5V	LVC 3V	UNIT
I_{CC}	MAX	41	45	-	0.02	0.01	mA
I_{OH}	MAX	0.25	0.25	-	±0.0025	-	mA
V_{OH}	MAX	30	30	5.5	5.5	5.5	V
I_{OL}	MAX	40	40	8	16	24	mA

SWITCHING CHARACTERISTICS

PARAMETER	INPUT	OUTPUT	MAX or MIN	TTL	LS	LV 3V	LV 5V	LVC 3V
t_{PLH}	A or B	Y	MAX	15	10	12	8.5	2.9
t_{PHL}	A or B	Y	MAX	26	30	12	8.5	2.9

UNIT: ns

PRODUCTION DATA information is current as of publication date. Products conform to specifications per the terms of Texas Instruments standard warranty. Production processing does not necessarily include testing of all parameters. See www.ti.com/sc/logic for the most current data sheets.
145

Advanced CMOS (11000 Series)

● 74ACT11xxx: Product Available in Reduced-Noise Advanced CMOS (11000 Series)

RECOMMENDED OPERATING CONDITIONS

PARAMETER	MAX or MIN	TTL	LS	S	ALS	AS	F	SN74 HC	CD74 HC	SN74 HCT	CD74 HCT	AC 11	SN74 AC	CD74 AC	ACT 11	UNIT
I_{CC}	MAX	33	8.8	57	4	24	12.9	0.02	0.04	0.02	0.04	0.04	0.02	0.08	0.04	mA
I_{OH}	MAX	-0.8	-0.4	-1	-0.4	-2	-1	-4	-4	-4	-4	-24	-24	-24	-24	mA
I_{OL}	MAX	16	8	20	8	20	20	4	4	4	4	24	24	24	24	mA

PARAMETER	MAX or MIN	SN74 ACT	CD74 ACT	AHC	AHCT	LV 3V	LV 5V	LVC	ALVC	UNIT
I_{CC}	MAX	0.02	0.08	0.02	0.02	-	0.02	0.01	0.01	mA
I_{OH}	MAX	-24	-24	-8	-8	-6	-12	-24	-24	mA
I_{OL}	MAX	24	24	8	8	6	12	24	24	mA

SWITCHING CHARACTERISTICS

PARAMETER	INPUT	OUTPUT	MAX or MIN	TTL	LS	S	ALS	AS	F	SN74 HC	CD74 HC	SN74 HCT	CD74 HCT	AC 11	SN74 AC	CD74 AC	ACT 11
t_{PLH}	A or B	Y	MAX	27	15	7	14	5.5	6.6	25	27	30	38	6.9	8.5	8.7	9
t_{PHL}	A or B	Y	MAX	19	20	7.5	10	5.5	6.3	25	27	30	38	6.5	7.5	8.7	8.2

PARAMETER	INPUT	OUTPUT	MAX or MIN	SN74 ACT	CD74 ACT	AHC	AHCT	LV 3V	LV 5V	LVC	ALVC
t_{PLH}	A or B	Y	MAX	10	12.9	9	9	14	9	4.1	2.9
t_{PHL}	A or B	Y	MAX	10	12.9	9	9	14	9	4.1	2.9

UNIT: ns

: OBSOLETED or NOT RECOMMENDED NEW DESIGNS

146

● Y = A•B

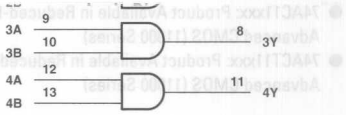

RECOMMENDED OPERATING CONDITIONS

PARAMETER	MAX or MIN	TTL	LS	S	ALS	F	SN74 HC	UNIT
I_{CC}	MAX	33	8.8	57	4.2	26.3	15.3	mA
I_{OH}	MAX	-	0.1	0.25	0.1	-	-	mA
V_{OH}	MAX	5.5	5.5	5.5	5.5	5.5	V_{CC}	mA
I_{OL}	MAX	16	8	20	8	20	4	mA

SWITCHING CHARACTERISTICS

PARAMETER	INPUT	OUTPUT	MAX or MIN	TTL	LS	S	ALS	F	SN74 HC
t_{PLH}	A or B	Y	MAX	32	35	10	54	9.6	31
t_{PHL}	A or B	Y	MAX	24	35	10	15	4.8	25

UNIT: ns

10

TRIPLE 3-INPUT POSITIVE-NAND GATES

- $Y = \overline{A \bullet B \bullet C}$
- 74AC11xxx: Product Available in Reduced-Noise Advanced CMOS (11000 Series)
- 74ACT11xxx: Product Available in Reduced-Noise Advanced CMOS (11000 Series)

Logic Diagram

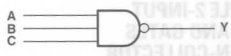

RECOMMENDED OPERATING CONDITIONS

PARAMETER	MAX or MIN	TTL	LS	S	ALS	AS	F	SN74 HC	CD74 HC	SN74 HCT	CD74 HCT	AC 11	SN74 AC	CD74 AC	ACT 11	UNIT
I_{CC}	MAX	16.5	3.3	27	2.2	13	7.7	0.02	0.04	0.02	0.04	0.04	0.02	0.08	0.04	mA
I_{OH}	MAX	-0.4	-0.4	-1	-0.4	-2	-1	-4	-4	-4	-4	-24	-24	-24	-24	mA
I_{OL}	MAX	16	8	20	8	20	20	4	4	4	4	24	24	24	24	mA

PARAMETER	MAX or MIN	SN74 ACT	CD74 ACT	LV 3V	LV 5V	LVC 3V	ALVC	UNIT
I_{CC}	MAX	0.04	0.08	-	0.02	0.01	0.01	mA
I_{OH}	MAX	-24	-24	-6	-12	-24	-24	mA
I_{OL}	MAX	24	24	6	12	24	24	mA

SWITCHING CHARACTERISTICS

PARAMETER	INPUT	OUTPUT	MAX or MIN	TTL	LS	S	ALS	AS	F	SN74 HC	CD74 HC	SN74 HCT	CD74 HCT	AC 11	SN74 AC	CD74 AC	ACT 11
t_{PLH}	A, B or C	Y	MAX	22	15	4.5	11	4.5	6	24	30	19	36	6.7	8	12.2	8.9
t_{PHL}	A, B or C	Y	MAX	15	15	5	10	4.5	5.3	24	30	19	36	7	6.5	12.2	8.2

PARAMETER	INPUT	OUTPUT	MAX or MIN	SN74 ACT	CD74 ACT	LV 3V	LV 5V	LVC 3V	ALVC
t_{PLH}	A, B or C	Y	MAX	10	-	13.5	9	4.9	3
t_{PHL}	A, B or C	Y	MAX	9.5	13.5	13.5	9	4.9	3

UNIT: ns

: OBSOLETED or NOT RECOMMENDED NEW DESIGNS

11

TRIPLE 3-INPUT POSITIVE-AND GATES

- Y = A•B•C
- 74AC11xxx: Product Available in Reduced-Noise Advanced CMOS (11000 Series)
- 74ACT11xxx: Product Available in Reduced-Noise Advanced CMOS (11000 Series)

Logic Diagram

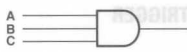

RECOMMENDED OPERATING CONDITIONS

PARAMETER	MAX or MIN	LS	S	ALS	AS	F	SN74 HC	CD74 HC	SN74 HCT	CD74 HCT	AC 11	SN74 AC	ACT 11	SN74 ACT	LV 3V	LV 5V	UNIT
I_{CC}	MAX	6.6	42	3	18	9.7	0.02	0.04	0.02	0.04	0.04	0.02	0.04	0.02	-	0.02	mA
I_{OH}	MAX	-0.4	-1	-0.4	-2	-1	-4	-4	-4	-4	-24	-24	-24	-24	-6	-12	mA
I_{OL}	MAX	8	20	8	20	20	4	4	4	4	24	24	24	24	6	12	mA

SWITCHING CHARACTERISTICS

PARAMETER	INPUT	OUTPUT	MAX or MIN	LS	S	ALS	AS	F	SN74 HC	CD74 HC	SN74 HCT	CD74 HCT	AC 11	SN74 AC	ACT 11	SN74 ACT
t_{PLH}	A, B or C	Y	MAX	15	7	13	6	6.6	25	30	21	42	6.5	8.5	9.6	10.5
t_{PHL}	A, B or C	Y	MAX	20	7.5	10	5.5	6.5	25	30	21	42	6.9	7.5	8.7	10.5

PARAMETER	INPUT	OUTPUT	MAX or MIN	LV 3V	LV 5V
t_{PLH}	A, B or C	Y	MAX	14	9
t_{PHL}	A, B or C	Y	MAX	14	9

UNIT: ns

- 74ACT11xxx: Product Available in Reduced-Noise Advanced CMOS (11000 Series)

RECOMMENDED OPERATING CONDITIONS

PARAMETER	MAX or MIN	TTL	LS	SN74 HC	CD74 HC	SN74 HCT	CD74 HCT	SN74 AC	CD74 AC	SN74 ACT	CD74 ACT	AHC	AHCT	UNIT
I_{CC}	MAX	60	21	0.02	0.04	0.02	0.04	0.02	0.08	0.02	0.08	0.02	0.02	mA
I_{OH}	MAX	-0.8	-0.4	-4	-4	-4	-4	-24	-24	-24	-24	-8	-8	mA
I_{OL}	MAX	16	8	4	4	4	4	24	24	24	24	8	8	mA

PARAMETER	MAX or MIN	LV 3V	LV 5V	LVC 3V	ALVC 3V	UNIT
I_{CC}	MAX	-	0.02	0.01	0.01	mA
I_{OH}	MAX	-6	-12	-24	-24	mA
I_{OL}	MAX	6	12	24	24	mA

SWITCHING CHARACTERISTICS

PARAMETER	INPUT	OUTPUT	MAX or MIN	TTL	LS	SN74 HC	CD74 HC	SN74 HCT	CD74 HCT	SN74 AC	CD74 AC	SN74 ACT	CD74 ACT
t_{PLH}	A or B	Y	MAX	22	22	31	41	40	57	11	10.5	12.5	14.5
t_{PHL}	A or B	Y	MAX	22	22	31	41	40	57	9.5	10.5	11	9.5

PARAMETER	INPUT	OUTPUT	MAX or MIN	AHC	AHCT	LV 3V	LV 5V	LVC 3V	ALVC 3V
t_{PLH}	A or B	Y	MAX	12	9	18.5	12	6.4	3.4
t_{PHL}	A or B	Y	MAX	12	9	18.5	12	6.4	3.4

UNIT: ns

: OBSOLETED or NOT RECOMMENDED NEW DESIGNS

16

HEX INVERTER BUFFERS/DRIVERS WITH OPEN-COLLECTOR HIGH-VOLTAGE OUTPUTS

● $Y = \overline{A}$

Logic Diagram

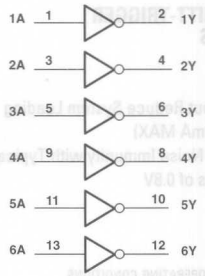

RECOMMENDED OPERATING CONDITIONS

PARAMETER	MAX or MIN	TTL	UNIT
I_{CC}	MAX	51	mA
V_{OH}	MAX	15	V
I_{OL}	MAX	40	mA

SWITCHING CHARACTERISTICS

PARAMETER	INPUT	OUTPUT	MAX or MIN	TTL
t_{PLH}	A	Y	MAX	15
t_{PHL}	A	Y	MAX	23

UNIT: ns

17

HEX BUFFERS/DRIVERS WITH OPEN-COLLECTOR HIGH-VOLTAGE OUTPUTS

● $Y = A$

Logic Diagram

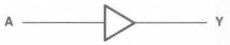

RECOMMENDED OPERATING CONDITIONS

PARAMETER	MAX or MIN	TTL	UNIT
I_{CC}	MAX	41	6.6
V_{OH}	MAX	15	V
I_{OL}	MAX	40	mA

SWITCHING CHARACTERISTICS

PARAMETER	INPUT	OUTPUT	MAX or MIN	TTL
t_{PLH}	A	Y	MAX	15
t_{PHL}	A	Y	MAX	26

UNIT: ns

PRODUCTION DATA information is current as of publication date. Products conform to specifications per the terms of Texas Instruments standard warranty. Production processing does not necessarily include testing of all parameters. See www.ti.com/sc/logic for the most current data sheets.

19

HEX SCHMITT-TRIGGER INVERTERS

- $Y = \overline{A}$
- P-N-P Input Reduce System Loading (I_{IL} = -0.05mA MAX)
- Excellent Noise Immunity with Typical Hysteresis of 0.8V

RECOMMENDED OPERATING CONDITIONS

PARAMETER	MAX or MIN	LS	UNIT
I_{CC}	MAX	30	mA
I_{OH}	MAX	-0.4	mA
I_{OL}	MAX	8	mA

SWITCHING CHARACTERISTICS

PARAMETER	INPUT	OUTPUT	MAX or MIN	LS
t_{PLH}	A or B	Y	MAX	20
t_{PHL}	A or B	Y	MAX	30

UNIT: ns

Logic Diagram

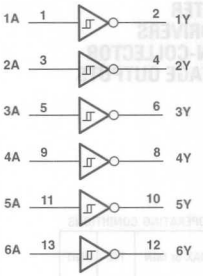

: OBSOLETED or NOT RECOMMENDED NEW DESIGNS

20

DUAL 4-INPUT POSITIVE-NAND GATES

- $Y = \overline{A \bullet B \bullet C \bullet D}$
- 74AC11xxx: Product Available in Reduced-Noise Advanced CMOS (11000 Series)
- 74ACT11xxx: Product Available in Reduced-Noise Advanced CMOS (11000 Series)

Logic Diagram

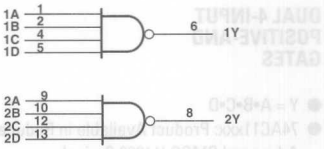

RECOMMENDED OPERATING CONDITIONS

PARAMETER	MAX or MIN	TTL	LS	S	ALS	AS	F	SN74 HC	CD74 HC	CD74 HCT	AC 11	CD74 AC	ACT 11	CD74 ACT	LV 3V	LV 5V	UNIT
I_{CC}	MAX	11	2.2	18	1.5	8.7	5.1	0.02	0.04	0.04	0.04	0.08	0.04	0.08	-	0.02	mA
I_{OH}	MAX	-0.4	-0.4	-1	-0.4	-2	-1	-4	-4	-4	-24	-24	-24	-24	-6	-12	mA
I_{OL}	MAX	16	8	20	8	20	20	4	4	4	24	24	24	24	6	12	mA

SWITCHING CHARACTERISTICS

PARAMETER	INPUT	OUTPUT	MAX or MIN	TTL	LS	S	ALS	AS	F	SN74 HC	CD74 HC	CD74 HCT	AC 11	CD74 AC	ACT 11	CD74 ACT
t_{PLH}	A, B, C or D	Y	MAX	22	15	4.5	11	5	6	28	30	42	6.7	12.2	9.1	13.5
t_{PHL}	A, B, C or D	Y	MAX	15	15	5	10	4.5	5.3	28	30	42	7.3	12.2	9.2	13.5

PARAMETER	INPUT	OUTPUT	MAX or MIN	LV 3V	LV 5V
t_{PLH}	A, B, C or D	Y	MAX	11.5	8
t_{PHL}	A, B, C or D	Y	MAX	11.5	8

UNIT: ns

PRODUCTION DATA information is current as of publication date. Products conform to specifications per the terms of Texas Instruments standard warranty. Production processing does not necessarily include testing of all parameters. See www.ti.com/sc/logic for the most current data sheets.

21

- 74AC11xxx: Product Available in Reduced-Noise Advanced CMOS (11000 Series)
- 74ACT11xxx: Product Available in Reduced-Noise Advanced CMOS (11000 Series)

RECOMMENDED OPERATING CONDITIONS

PARAMETER	MAX or MIN	LS	ALS	AS	F	SN74 HC	CD74 HC	CD74 HCT	AC 11	ACT 11	LV 3V	LV 5V	UNIT
I_{CC}	MAX	4.4	2.3	12	7.3	0.02	0.04	0.04	0.04	0.04	-	0.02	mA
I_{OH}	MAX	-0.4	-0.4	-2	-1	-4	-4	-4	-24	-24	-6	-12	mA
I_{OL}	MAX	8	8	20	20	4	4	4	24	24	6	12	mA

SWITCHING CHARACTERISTICS

PARAMETER	INPUT	OUTPUT	MAX or MIN	LS	ALS	AS	F	SN74 HC	CD74 HC	CD74 HCT	AC 11	ACT 11	LV 3V	LV 5V
t_{PLH}	A, B, C or D	Y	MAX	15	15	6	5.3	28	33	41	8.8	9.8	12	6
t_{PHL}	A, B, C or D	Y	MAX	20	10	6	5.5	28	33	41	6.9	8.9	12	8

UNIT: ns

25

DUAL 4-INPUT POSITIVE-NOR GATES WITH STROBE

- $Y = \overline{G\,(A + B + C + D)}$

Logic Diagram

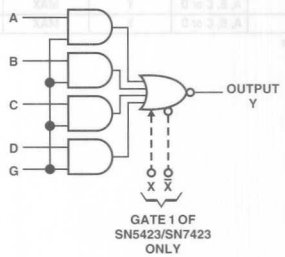

RECOMMENDED OPERATING CONDITIONS

PARAMETER	MAX or MIN	TTL	UNIT
I_{CC}	MAX	19	mA
I_{OH}	MAX	-0.8	mA
I_{OL}	MAX	16	mA

SWITCHING CHARACTERISTICS

PARAMETER	INPUT	OUTPUT	MAX or MIN	TTL
t_{PLH}	A or B	Y	MAX	22
t_{PHL}	A or B	Y	MAX	15

UNIT: ns

: OBSOLETED or NOT RECOMMENDED NEW DESIGNS

- $Y = \overline{AB}$

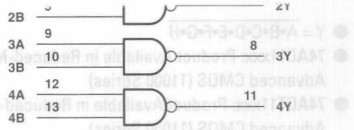

RECOMMENDED OPERATING CONDITIONS

PARAMETER	MAX or MIN	TTL	LS	UNIT
I_{CC}	MAX	22	4.4	mA
V_{OH}	MAX	15	15	V
I_{OL}	MAX	16	8	mA

SWITCHING CHARACTERISTICS

PARAMETER	INPUT	OUTPUT	MAX or MIN	TTL	LS
t_{PLH}	A or B	Y	MAX	24	32
t_{PHL}	A or B	Y	MAX	17	28

UNIT: ns

27

TRIPLE 3-INPUT POSITIVE-NOR GATES

Logic Diagram

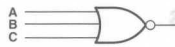

- $Y = \overline{A + B + C}$
- 74AC11xxx: Product Available in Reduced-Noise Advanced CMOS (11000 Series)
- 74ACT11xxx: Product Available in Reduced-Noise Advanced CMOS (11000 Series)

RECOMMENDED OPERATING CONDITIONS

PARAMETER	MAX or MIN	TTL	LS	ALS	AS	F	SN74 HC	CD74 HC	CD74 HCT	AC 11	ACT 11	LV 3V	LV 5V	UNIT
I_{CC}	MAX	26	6.8	4	17.1	12	0.02	0.04	0.04	0.04	0.04	-	0.02	mA
I_{OH}	MAX	-0.8	-0.4	-0.4	-2	-1	-4	-4	-4	-24	-24	-6	-12	mA
I_{OL}	MAX	16	8	8	20	20	4	4	4	24	24	6	12	mA

SWITCHING CHARACTERISTICS

PARAMETER	INPUT	OUTPUT	MAX or MIN	TTL	LS	ALS	AS	F	SN74 HC	CD74 HC	CD74 HCT	AC 11	ACT 11	LV 3V	LV 5V
t_{PLH}	A, B or C	Y	MAX	15	15	15	5.5	5.5	23	29	35	7.7	10.1	14	9
t_{PHL}	A, B or C	Y	MAX	11	15	9	4.5	4.5	23	29	35	8.1	9.4	14	9

UNIT: ns

PRODUCTION DATA information is current as of publication date. Products conform to specifications per the terms of Texas Instruments standard warranty. Production processing does not necessarily include testing of all parameters. See www.ti.com/sc/logic for the most current data sheets.

30

8-INPUT POSITIVE-NAND GATES

- $Y = \overline{A \bullet B \bullet C \bullet D \bullet E \bullet F \bullet G \bullet H}$
- 74AC11xxx: Product Available in Reduced-Noise Advanced CMOS (11000 Series)
- 74ACT11xxx: Product Available in Reduced-Noise Advanced CMOS (11000 Series)

Logic Diagram

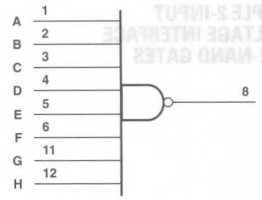

RECOMMENDED OPERATING CONDITIONS

PARAMETER	MAX or MIN	TTL	LS	S	ALS	AS	F	SN74 HC	CD74 HC	CD74 HCT	AC 11	ACT 11	UNIT
I_{CC}	MAX	6	1.1	10	0.9	4.9	4	0.02	0.04	0.04	0.04	0.04	mA
I_{OH}	MAX	-0.4	-0.4	-1	-0.4	-2	-1	-4	-4	-4	-24	-24	mA
I_{OL}	MAX	16	8	20	8	20	20	4	4	4	24	24	mA

SWITCHING CHARACTERISTICS

PARAMETER	INPUT	OUTPUT	MAX or MIN	TTL	LS	S	ALS	AS	F	SN74 HC	CD74 HC	CD74 HCT	AC 11	ACT 11
t_{PLH}	A thru H	Y	MAX	22	15	6	10	5	5.5	33	39	42	7.2	8.5
t_{PHL}	A thru H	Y	MAX	15	20	7	12	4.5	5	33	39	42	7.4	8.7

UNIT: ns

31

DELAY ELEMENTS

- Delay Elements for Generating Delay Line
- Inverting and Non-inverting Elements
- Buffer NAND Elements Rated at I_{OL} of 12/24mA
- P-N-P Inputs Reduce Fan-In (I_{IL} = -0.2mA MAX)
- Worst Case MIN/MAX Delays Guaranteed Across Temperature and V_{CC} Range

Logic Diagram

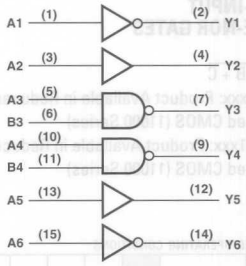

RECOMMENDED RECOMMENDED OPERATING CONDITIONS

PARAMETER		MAX or MIN	LS	UNIT
I_{CC}		MAX	20	mA
I_{OH}	Y3, Y4 outputs	MAX	-1.2	mA
	All other outputs	MAX	-0.4	mA
I_{OL}	Y3, Y4 outputs	MAX	24	mA
	All other outputs	MAX	8	mA

SWITCHING CHARACTERISTICS

PARAMETER	INPUT	OUTPUT	MAX or MIN	LS
t_{PLH}	A1, A6	Y1, Y6	MAX	65
t_{PHL}				45
t_{PLH}	A2, A5	Y2, Y5	MAX	80
t_{PHL}				95
t_{PLH}	A3, B3	Y3, Y4	MAX	15
t_{PHL}	A4, Y4			15

UNIT: ns

: OBSOLETED or NOT RECOMMENDED NEW DESIGNS

32

QUADRUPLE 2-INPUT POSITIVE-OR GATES

● $Y = A + B$

Logic Diagram

RECOMMENDED OPERATING CONDITIONS

PARAMETER	MAX or MIN	TTL	LS	S	ALS	AS	F	SN74 HC	CD74 HC	SN74 HCT	CD74 HCT	AC 11	SN74 AC	CD74 AC	ACT 11	UNIT
I_{CC}	MAX	38	9.8	68	4.9	26.6	15.5	0.02	0.04	0.02	0.04	0.04	0.02	0.08	0.04	mA
I_{OH}	MAX	-0.8	-0.4	-1	-0.4	-2	-1	-4	-4	-4	-4	-24	-24	-24	-24	mA
I_{OL}	MAX	16	8	20	8	20	20	4	4	4	4	24	24	24	24	mA

PARAMETER	MAX or MIN	SN74 ACT	CD74 ACT	AHC	AHCT	LV 3V	LV 5V	LVC 3V	ALVC	UNIT
I_{CC}	MAX	0.02	0.08	0.02	0.02	0.02	0.02	0.01	0.01	mA
I_{OH}	MAX	-24	-24	-8	-8	-6	-12	-24	-24	mA
I_{OL}	MAX	24	24	8	8	6	12	24	24	mA

SWITCHING CHARACTERISTICS

PARAMETER	INPUT	OUTPUT	MAX or MIN	TTL	LS	S	ALS	AS	F	SN74 HC	CD74 HC	SN74 HCT	CD74 HCT	AC 11	SN74 AC
t_{PLH}	A or B	Y	MAX	15	22	7	14	5.8	6.6	25	27	30	36	6.7	8.5
t_{PHL}	A or B	Y	MAX	22	22	7	12	5.8	-	25	27	30	36	5.9	7.5

PARAMETER	INPUT	OUTPUT	MAX or MIN	CD74 AC	ACT 11	SN74 ACT	CD74 ACT	AHC	AHCT	LV 3V	LV 5V	LVC 3V	ALVC 3V
t_{PLH}	A or B	Y	MAX	9.5	9	10	12.1	8.5	9	13	8.5	3.8	2.8
t_{PHL}	A or B	Y	MAX	9.5	8	10	12.1	8.5	9	13	8.5	3.8	2.8

UNIT: ns

PRODUCTION DATA information is current as of publication date. Products conform to specifications per the terms of Texas Instruments standard warranty. Production processing does not necessarily include testing of all parameters. See www.ti.com/sc/logic for the most current data sheets.

33

QUADRUPLE 2-INPUT POSITIVE-NOR BUFFERS WITH OPEN-COLLECTOR OUTPUTS

● $Y = \overline{A + B}$

Logic Diagram

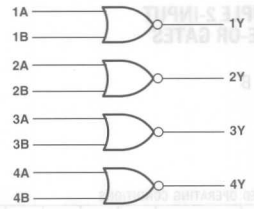

RECOMMENDED OPERATING CONDITIONS

PARAMETER	MAX or MIN	TTL	LS	ALS	UNIT
I_{CC}	MAX	16.5	13.8	9	mA
V_{OH}	MAX	5.5	5.5	5.5	V
I_{OL}	MAX	48	24	24	mA

SWITCHING CHARACTERISTICS

PARAMETER	INPUT	OUTPUT	MAX or MIN	TTL	LS	ALS
t_{PLH}	A or B	Y	MAX	15	32	33
t_{PHL}	A or B	Y	MAX	18	28	12

UNIT: ns

35

HEX NONINVERTERS WITH OPEN-COLLECTOR OUTPUTS

● $Y = A$

Logic Diagram

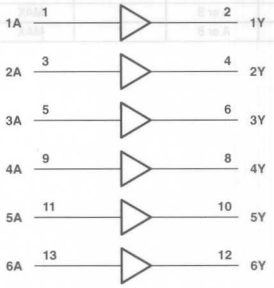

RECOMMENDED OPERATING CONDITIONS

PARAMETER	MAX or MIN	ALS	UNIT
I_{CC}	MAX	63	mA
V_{OH}	MAX	5.5	V
I_{OL}	MAX	8	mA

SWITCHING CHARACTERISTICS

PARAMETER	INPUT	OUTPUT	MAX or MIN	ALS
t_{PLH}	A	Y	MAX	50
t_{PHL}	A	Y	MAX	14

UNIT: ns

: OBSOLETED or NOT RECOMMENDED NEW DESIGNS

37

Logic Diagram

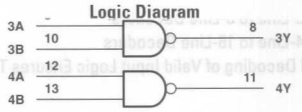

RECOMMENDED OPERATING CONDITIONS

PARAMETER	MAX or MIN	TTL	LS	S	ALS	F	UNIT
I_{CC}	MAX	54	12	80	7.8	33	mA
I_{OH}	MAX	-1.2	-1.2	-3	-2.6	-15	mA
I_{OL}	MAX	48	24	60	24	64	mA

SWITCHING CHARACTERISTICS

PARAMETER	INPUT	OUTPUT	MAX or MIN	TTL	LS	S	ALS	F
t_{PLH}	A or B	Y	MAX	22	24	6.5	8	6.5
t_{PHL}	A or B	Y	MAX	15	24	6.5	7	5

UNIT: ns

38

QUADRUPLE 2-INPUT POSITIVE-NAND BUFFERS WITH OPEN-COLLECTOR OUTPUTS

● $Y = \overline{A \cdot B}$

Logic Diagram

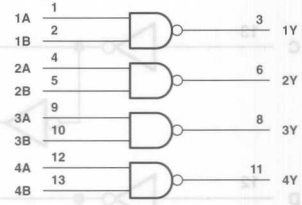

RECOMMENDED OPERATING CONDITIONS

PARAMETER	MAX or MIN	TTL	LS	S	ALS	F	UNIT
I_{CC}	MAX	54	12	80	7.8	30	mA
V_{OH}	MAX	5.5	5.5	5.5	5.5	4.5	V
I_{OL}	MAX	48	24	60	24	64	mA

SWITCHING CHARACTERISTICS

PARAMETER	INPUT	OUTPUT	MAX or MIN	TTL	LS	S	ALS	F
t_{PLH}	A or B	Y	MAX	22	32	10	33	13
t_{PHL}	A or B	Y	MAX	18	28	10	12	5.5

UNIT: ns

PRODUCTION DATA information is current as of publication date. Products conform to specifications per the terms of Texas Instruments standard warranty. Production processing does not necessarily include testing of all parameters. See www.ti.com/sc/logic for the most current data sheets.

42

4-LINE TO 10-LINE DECODERS

- All Outputs Are High for Invalid Input Conditions
- Also for Applications as
  - 3-Line to 8-Line Decoders
  - 4-Line to 16-Line Decoders
- Full Decoding of Valid Input Logic Ensures That All Inputs Remain Off for All Invalid Input Conditions

Logic Diagram

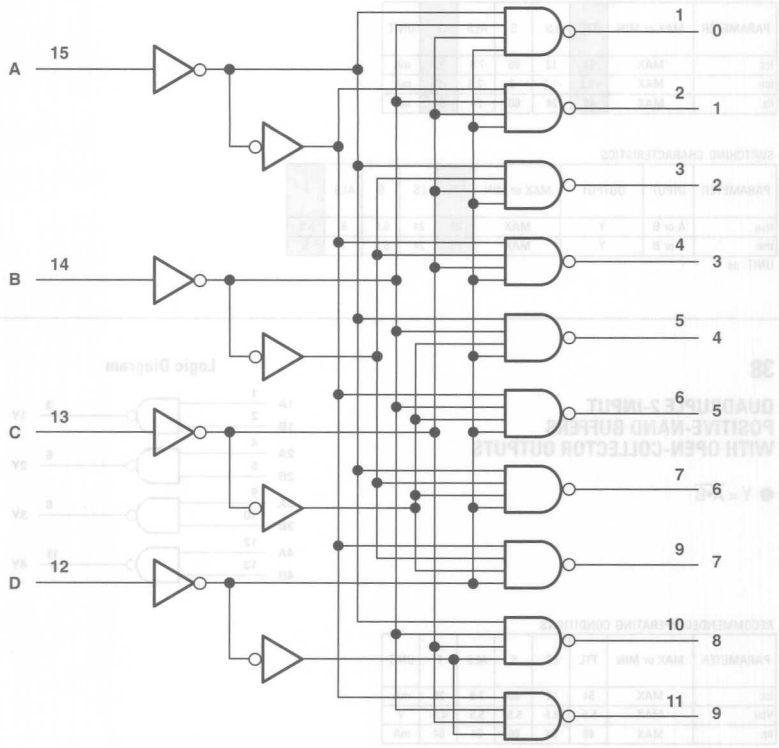

: OBSOLETED or NOT RECOMMENDED NEW DESIGNS

FUNCTION TABLE

No.	INPUTS				OUTPUTS									
	D	C	B	A	0	1	2	3	4	5	6	7	8	9
0	L	L	L	L	L	H	H	H	H	H	H	H	H	H
1	L	L	L	H	H	L	H	H	H	H	H	H	H	H
2	L	L	H	L	H	H	L	H	H	H	H	H	H	H
3	L	L	H	H	H	H	H	L	H	H	H	H	H	H
4	L	H	L	L	H	H	H	H	L	H	H	H	H	H
5	L	H	L	H	H	H	H	H	H	L	H	H	H	H
6	L	H	H	L	H	H	H	H	H	H	L	H	H	H
7	L	H	H	H	H	H	H	H	H	H	H	L	H	H
8	H	L	L	L	H	H	H	H	H	H	H	H	L	H
9	H	L	L	H	H	H	H	H	H	H	H	H	H	L
INVALID	H	L	H	L	H	H	H	H	H	H	H	H	H	H
	H	L	H	H	H	H	H	H	H	H	H	H	H	H
	H	H	L	L	H	H	H	H	H	H	H	H	H	H
	H	H	L	H	H	H	H	H	H	H	H	H	H	H
	H	H	H	L	H	H	H	H	H	H	H	H	H	H
	H	H	H	H	H	H	H	H	H	H	H	H	H	H

RECOMMENDED OPERATING CONDITIONS

PARAMETER	MAX or MIN	TTL	LS	SN74 HC	CD74 HC	CD74 HCT	UNIT
I_{CC}	MAX	56	13	0.08	0.16	0.16	mA
I_{OH}	MAX	-0.8	-0.4	-4	-4	-4	mA
I_{OL}	MAX	16	8	4	4	4	mA

SWITCHING CHARACTERISTICS

PARAMETER	INTPUT	OUTPUT	MAX or MIN	TTL	LS	SN74 HC	CD74 HC	CD74 HCT
t_{PLH} 2Level · Logic	A, B, C or D	0-9	MAX	25	25	38	45	53
t_{PHL} 2Level · Logic		0-9		25	25	38	45	53
t_{PLH} 3Level · Logic	A, B, C or D	0-9	MAX	30	30	38	45	53
t_{PHL} 3Level · Logic		0-9		30	30	38	45	53

UNIT: ns

45

BCD-TO-DECIMAL DECODER/DRIVER

- 80-mA Sink-Current Capability
- All Outputs Are Off for Invalid BCD Input Conditions

Logic Diagram

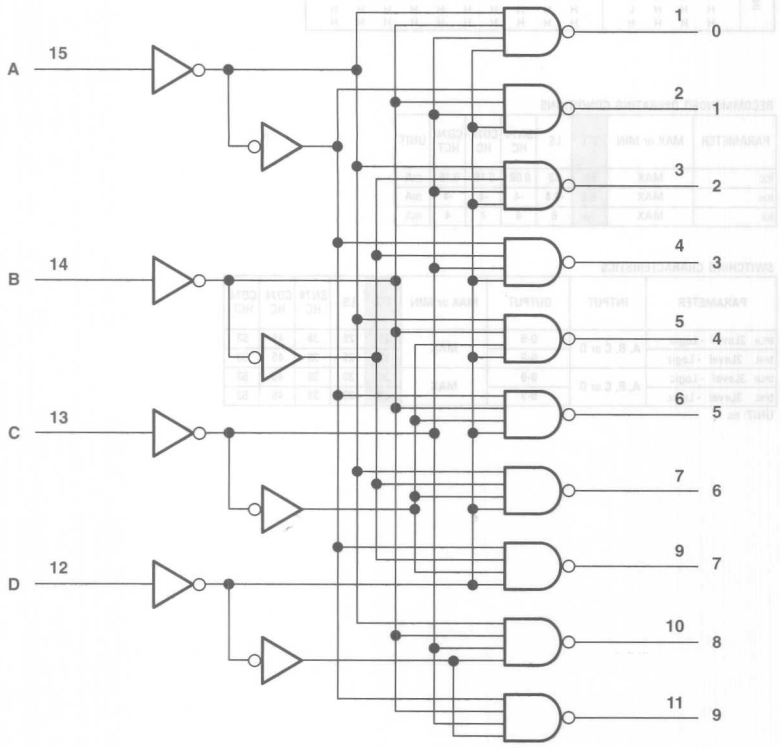

: OBSOLETED or NOT RECOMMENDED NEW DESIGNS

5	L	H	L	H	H	H	H	H	H	L	H	H	H	H	H
6	L	H	H	L	H	H	H	H	H	H	L	H	H	H	H
7	L	H	H	H	H	H	H	H	H	H	H	L	H	H	H
8	H	L	L	L	H	H	H	H	H	H	H	H	L	H	H
9	H	L	L	H	H	H	H	H	H	H	H	H	H	L	H
INVALID	H	L	H	L	H	H	H	H	H	H	H	H	H	H	H
	H	L	H	H	H	H	H	H	H	H	H	H	H	H	H
	H	H	L	L	H	H	H	H	H	H	H	H	H	H	H
	H	H	L	H	H	H	H	H	H	H	H	H	H	H	H
	H	H	H	L	H	H	H	H	H	H	H	H	H	H	H
	H	H	H	H	H	H	H	H	H	H	H	H	H	H	H

RECOMMENDED OPERATING CONDITIONS

PARAMETER	MAX or MIN	TTL	UNIT
I_{CC}	MAX	70	mA
$V_{O(on)}$	MAX	0.9	V
I_{OL}	MAX	80	mA

SWITCHING CHARACTERISTICS

PARAMETER	MAX or MIN	TTL
t_{PLH}	MAX	25
t_{PHL}		25

UNIT: ns

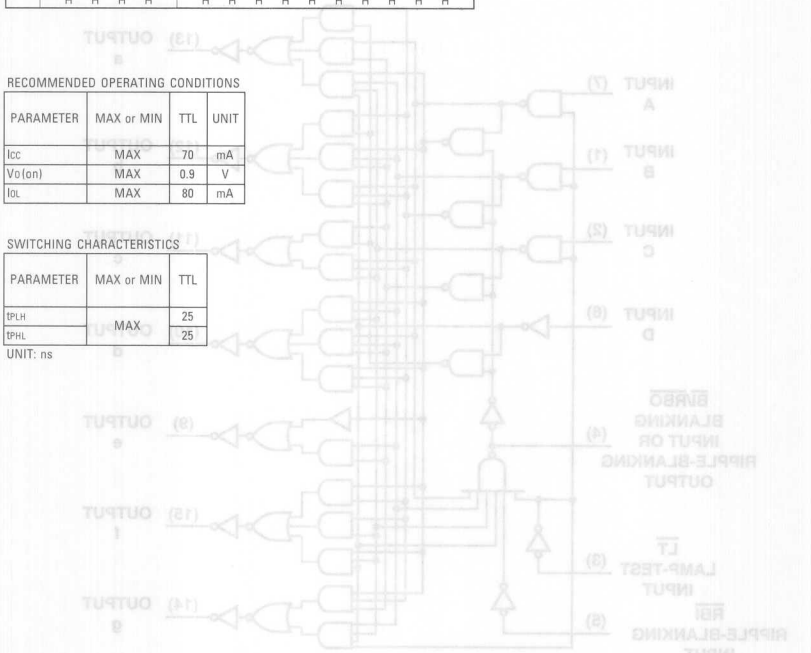

47

BCD-TO-SEVEN-SEGMENT DECODERS/DRIVERS

- Open-Collector Outputs
- Lamp-Test Provision
- Leading/Trailing Zero Suppression

Logic Diagram

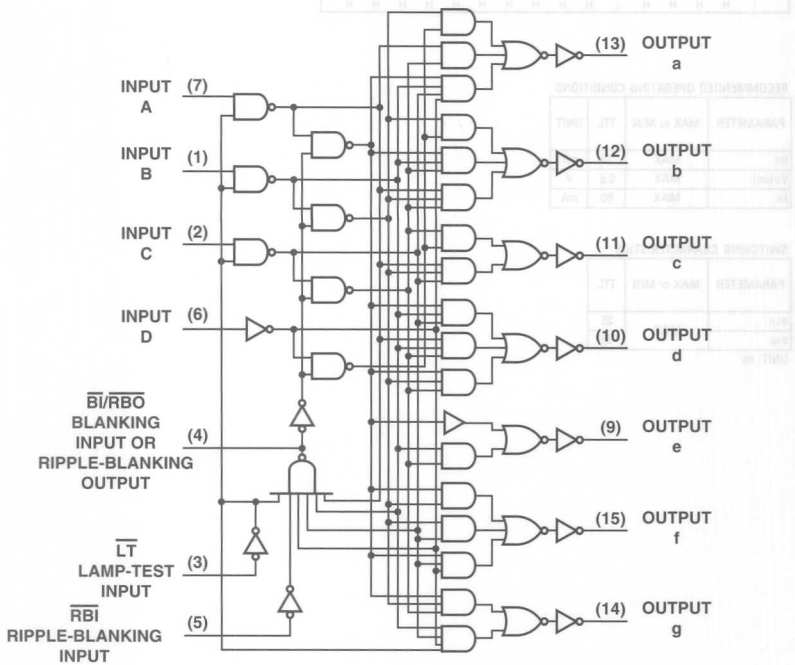

: OBSOLETED or NOT RECOMMENDED NEW DESIGNS

FUNCTION TABLE

No.	INPUTS						BI/RBO	OUTPUTS						
	LT	RBI	D	C	B	A		a	b	c	d	e	f	g
0	H	H	L	L	L	L	H	ON	ON	ON	ON	ON	ON	OFF
1	H	X	L	L	L	H	H	OFF	ON	ON	OFF	OFF	OFF	OFF
2	H	X	L	L	H	L	H	ON	ON	OFF	ON	ON	OFF	ON
3	H	X	L	L	H	H	H	ON	ON	ON	ON	OFF	OFF	ON
4	H	X	L	H	L	L	H	OFF	ON	ON	OFF	OFF	ON	ON
5	H	X	L	H	L	H	H	ON	OFF	ON	ON	OFF	ON	ON
6	H	X	L	H	H	L	H	OFF	OFF	ON	ON	ON	ON	ON
7	H	X	L	H	H	H	H	ON	ON	ON	OFF	OFF	OFF	OFF
8	H	X	H	L	L	L	H	ON	ON	ON	ON	ON	ON	ON
9	H	X	H	L	L	H	H	ON	ON	ON	OFF	OFF	ON	ON
10	H	X	H	L	H	L	H	OFF	OFF	OFF	ON	ON	OFF	ON
11	H	X	H	L	H	H	H	OFF	OFF	ON	ON	OFF	OFF	ON
12	H	X	H	H	L	L	H	OFF	ON	OFF	OFF	OFF	ON	ON
13	H	X	H	H	L	H	H	ON	OFF	OFF	ON	OFF	ON	ON
14	H	X	H	H	H	L	H	OFF	OFF	OFF	ON	ON	ON	ON
15	H	X	H	H	H	H	H	OFF	OFF	OFF	OFF	OFF	OFF	OFF
BI	X	X	X	X	X	X	L	OFF	OFF	OFF	OFF	OFF	OFF	OFF
RBI	H	L	L	L	L	L	L	OFF	OFF	OFF	OFF	OFF	OFF	OFF
LT	L	X	X	X	X	X	H	ON	ON	ON	ON	ON	ON	ON

RECOMMENDED OPERATING CONDITIONS

PARAMETER	MAX or MIN	TTL	LS	UNIT
I_{CC}	MAX	103	13	mA
I_{OH}	MAX	-0.2	-0.05	mA
I_{OL}	MAX	8	3.2	mA

SWITCHING CHARACTERISTICS

PARAMETER	INPUT	OUTPUT	MAX or MIN	TTL	LS
t_{off}	A	A to g	MAX	100	100
t_{on}	A	A to g	MAX	100	100
t_{off}	RBI	A to g	MAX	100	100
t_{on}	RBI	A to g	MAX	100	100

UNIT: ns

51

AND-OR INVERT GATES

- '51, 'S51: $Y = \overline{AB + CD}$
- 'F51, 'LS51: $1Y = \overline{(1A \bullet 1B \bullet 1C) + (1D \bullet 1E \bullet 1F)}$
- 'HC51: $2Y = \overline{(2A \bullet 2B) + (2C \bullet 2D)}$

Logic Diagram

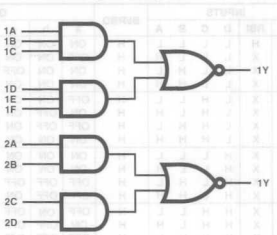

RECOMMENDED OPERATING CONDITIONS

PARAMETER	MAX or MIN	TTL	LS	S	F	SN74 HC	UNIT
I_{CC}	MAX	14	2.8	22	7.5	0.08	mA
I_{OH}	MAX	-0.4	-0.4	-1	-1	-4	mA
I_{OL}	MAX	16	8	20	20	4	mA

SWITCHING CHARACTERISTICS

PARAMETER	INPUT	OUTPUT	MAX or MIN	TTL	LS	S	F	SN74 HC
t_{PLH}	Any	Y	MAX	22	20	5.5	6.5	35
t_{PHL}	Any	Y	MAX	15	20	5.5	4.5	35

UNIT: ns

64

4-2-3-2 INPUT AND-OR INVERT GATE

● $Y = \overline{ABCD + EF + GHI + JK}$

Logic Diagram

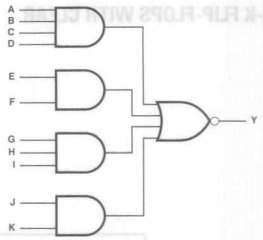

RECOMMENDED OPERATING CONDITIONS

PARAMETER	MAX or MIN	S	F	UNIT
I_{CC}	MAX	16	4.7	mA
I_{OH}	MAX	-1	-1	mA
I_{OL}	MAX	20	20	mA

SWITCHING CHARACTERISTICS

PARAMETER	INPUT	OUTPUT	MAX or MIN	S	F
t_{PLH}	Any	Y	MAX	5.5	7
t_{PHL}	Any	Y	MAX	5.5	5.5

UNIT: ns

PRODUCTION DATA information is current as of publication date. Products conform to specifications per the terms of Texas Instruments standard warranty. Production processing does not necessarily include testing of all parameters. See www.ti.com/sc/logic for the most current data sheets.

73

DUAL J-K FLIP-FLOPS WITH CLEAR

Logic Diagram

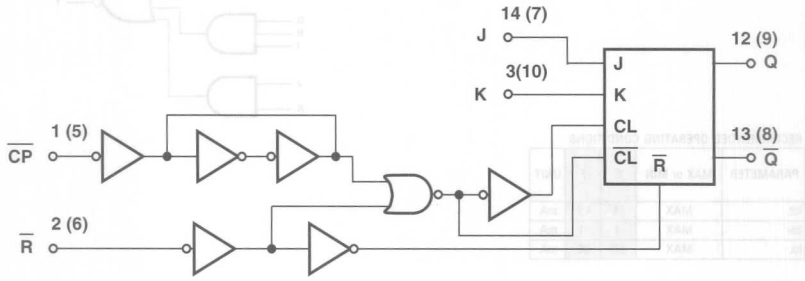

CD74HC/HCT73

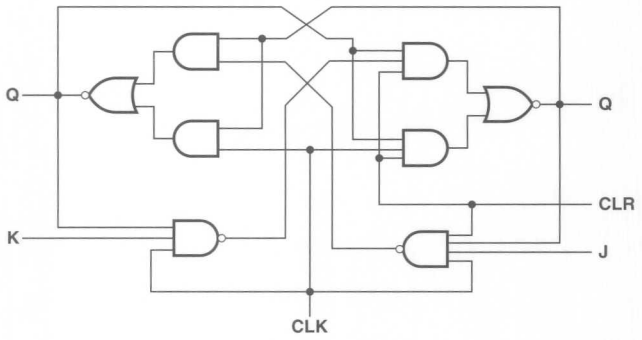

'LS73

FUNCTION TABLE (SN74)

INPUTS				OUTPUTS	
$\overline{CLEAR}$	CLOCK	J	K	Q	$\overline{Q}$
L	X	X	X	L	H
H	↓	L	L	Q_0	$\overline{Q_0}$
H	↓	H	L	H	L
H	↓	L	H	L	H
H	↓	H	H	TOGGLE	
H	H	X	X	Q_0	$\overline{Q_0}$

TRUTH TABLE (CD74)

INPUTS				OUTPUTS	
$\overline{R}$	$\overline{CP}$	J	K	Q	$\overline{Q}$
L	X	X	X	L	H
H	↓	L	L	No Change	
H	↓	H	L	H	L
H	↓	L	H	L	H
H	↓	H	H	Toggle	
H	H	X	X	No Change	

NOTE:
H = High Level (Steady State)
L = Low Level (Steady State)
X = Irrelevant
↓ = High-to-Low Transition

RECOMMENDED OPERATING CONDITIONS

PARAMETER	MAX or MIN	TTL	LS	SN74 HC	CD74 HC	CD74 HCT	UNIT
I_{CC}	MAX	20	6	0.04	0.08	0.08	mA
I_{OH}	MAX	16	8	4	4	4	mA
I_{OL}	MAX	-0.4	-0.4	-4	-4	-4	mA

SWITCHING CHARACTERISTICS

PARAMETER		INPUT	OUTPUT	MAX or MIN	TTL	LS	SN74 HC	CD74 HC	CD74 HCT
fmax				MIN	15	30	25	20	20
tw	CLOCK"L"			MIN	20	-	20	-	-
	CLOCK"H"				47	20	20	-	-
	$\overline{CP}$ Pulse Wide				-	-	-	24	24
	$\overline{CLEAR}$ "L"				25	20	20	24	27
tsu	CLK			MIN	0 ↑	20 ↓	25 ↓	-	-
	J,K to $\overline{CP}$				-	-	-	24	24
th	CLK			MIN	0 ↓	0 ↓	0 ↓	-	-
	J,K to $\overline{CP}$				-	-	-	3	3
t_{PLH}		$\overline{CLEAR}$	$\overline{Q}$	MAX	25	20	39	44	51
t_{PHL}					-	20	39	44	51
t_{PLH}		$\overline{CLEAR}$	Q	MAX	-	20	39	44	51
t_{PHL}					40	20	39	44	51
t_{PLH}		CLOCK	Q or $\overline{Q}$	MAX	25	20	32	-	-
t_{PHL}					40	20	32	-	-
t_{PLH}		$\overline{CP}$	Q	MAX	-	-	-	48	57
t_{PHL}					-	-	-	48	57
t_{PLH}		$\overline{CP}$	$\overline{Q}$	MAX	-	-	-	48	54
t_{PHL}					-	-	-	48	54

UNIT fmax : MHz, other : ns

Logic Diagram

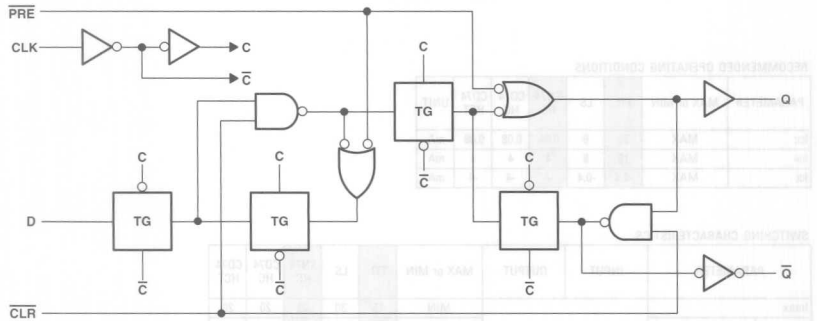

FUNCTION TABLE

INPUTS				OUTPUTS	
$\overline{PRESET}$	$\overline{CLEAR}$	CLOCK	D	Q	$\overline{Q}$
L	H	X	X	H	L
H	L	X	X	L	H
L	L	X	X	H†	H†
H	H	↓	H	H	L
H	H	↓	L	L	H
H	H	L	X	Q_0	$\overline{Q_0}$

† This configuration is unstable; that is, it does not persist when $\overline{PRE}$ or $\overline{CLR}$ returns to its inactive (high) level.

RECOMMENDED OPERATING CONDITIONS

PARAMETER	MAX or MIN	TTL	LS	S	ALS	AS	F	SN74 HC	CD74 HC	SN74 HCT	CD74 HCT	AC 11	SN74 AC	CD74 AC	ACT 11	UNIT
I_{CC}	MAX	15	8	25	4	16	16	0.04	0.08	0.04	0.08	0.04	0.02	0.08	0.04	mA
I_{OH}	MAX	-0.4	-0.4	-1	-0.4	-2	-1	-4	-4	-4	-4	-24	-24	-24	-24	mA
I_{OL}	MAX	16	8	20	8	20	20	4	4	4	4	24	24	24	24	mA

PARAMETER	MAX or MIN	SN74 ACT	CD74 ACT	AHC	AHCT	LV 3V	LV 5V	LVC 3V	UNIT
I_{CC}	MAX	0.02	0.08	0.02	0.02	-	0.02	0.01	mA
I_{OH}	MAX	-24	-24	-8	-8	-6	-12	-24	mA
I_{OL}	MAX	24	24	8	8	6	12	24	mA

SWITCHING CHARACTERISTICS

PARAMETER		INPUT	OUTPUT	MAX or MIN	TTL	LS	S	ALS	AS	F	SN74 HC	CD74 HC	SN74 HCT	CD74 HCT	AC 11
fmax				MIN	15	25	75	34	105	100	25	20	24	16	125
tw	CLOCK"H"			MIN	30	25	6	14.5	4	4	20	24	23	27	4
	CLOCK"L"			MIN	37	-	7.3	14.5	5.5	5	20	24	23	27	4
	$\overline{RESET}$ or $\overline{CLEAR}$ "L"			MIN	30	25	7	15	4	4	25	24	20	24	4
tsu	D			MIN	20	20	3	15	4.5	3	25	18	15	18	3.5
	$\overline{PRE}$, $\overline{CLR}$ INACTIVE			MIN	20	-	-	10	2	2	6	-	0	5	1
th				MIN	5	5	2	0	0	1	0	3	0	3	0
t_{PLH}		$\overline{RESET}$	Q	MAX	25	25	6	13	7.5	7.1	58	60	44	60	7.1
t_{PHL}			$\overline{Q}$		40	40	13.5	15	10.5	10.5	58	60	44	60	9
t_{PLH}		$\overline{CLEAR}$	$\overline{Q}$	MAX	25	25	6	13	7.5	7.1	58	60	44	60	7.1
t_{PHL}			Q		40	40	13.5	15	10.5	10.5	58	60	44	60	9
t_{PLH}		CLOCK	Q or $\overline{Q}$	MAX	25	25	9	16	8	7.8	44	53	35	53	8.2
t_{PHL}					40	40	9	18	9	9.2	44	53	35	53	7.5

PARAMETER		INPUT	OUTPUT	MAX or MIN	SN74 AC	CD74 AC	ACT 11	SN74 ACT	CD74 ACT	AHC	AHCT	LV 3V	LV 5V	LVC 3V
fmax				MIN	125	110	85	125	85	75	65	45	75	100
tw	CLOCK"H"			MIN	5	4.5	5	6	5.7	5	5	7	5	3.3
	CLOCK"L"			MIN	5	4.5	5	6	5.7	5	5	7	5	3.3
	$\overline{RESET}$ or $\overline{CLEAR}$ "L"			MIN	5	4	5	6	5	5	5	7	5	3.3
tsu	D			MIN	3	3.5	4.5	3.5	4	5	5	7	5	3
	$\overline{PRE}$, $\overline{CLR}$ INACTIVE			MIN	0	-	2	0	-	3	3.5	5	3	2
th				MIN	0.5	0	0	1	9.5	0.5	0	0.5	0.5	0
t_{PLH}		$\overline{RESET}$	Q	MAX	10	10.5	9.6	11.5	11.5	11	13	18	11	5.4
t_{PHL}			$\overline{Q}$		10.5	11.5	12.5	12.5	12.5	11	13	18	11	5.4
t_{PLH}		$\overline{CLEAR}$	$\overline{Q}$	MAX	10	10.5	9.6	11.5	11.5	11	13	18	11	5.4
t_{PHL}			Q		10.5	11.5	12.5	12.5	12.5	11	13	18	11	5.4
t_{PLH}		CLOCK	Q or $\overline{Q}$	MAX	10.5	10	9.4	14	9.5	10.5	10	17.5	10.5	5.2
t_{PHL}					10.5	10	8.8	12	9.5	10.5	10	17.5	10.5	5.2

UNIT fmax : MHz, other : ns

75

4-BIT BISTABLE LATCHES

Logic Diagram

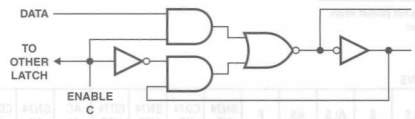

SN74LS75

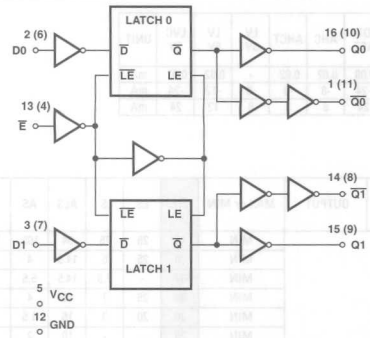

CD74HC/HCT75

FUNCTION TABLE

INPUTS		OUTPUTS	
D	C	Q	$\overline{Q}$
L	H	L	H
H	H	H	L
X	L	Q_0	$\overline{Q}_0$

RECOMMENDED OPERATING CONDITIONS

PARAMETER	MAX or MIN	TTL	LS	SN74 HC	CD74 HC	CD74 HCT	UNIT
I_{CC}	MAX	53	12	0.04	0.08	0.08	mA
I_{OH}	MAX	-0.4	-0.4	-4	-4	-4	mA
I_{OL}	MAX	16	8	4	4	4	mA

SWITCHING CHARACTERISTICS

PARAMETER	INPUT	OUTPUT	MAX or MIN	TTL	LS	SN74 HC	CD74 HC	CD74 HCT
tw			MIN	20	20	20	24	24
tsu			MIN	20	20	25	18	18
th			MIN	5	5	5	3	3
t_{PLH}	D	Q	MAX	30	27	30	33	42
t_{PHL}				25	17	30	33	42
t_{PLH}	D	$\overline{Q}$	MAX	40	20	30	39	42
t_{PHL}				15	15	30	39	42
t_{PLH}	G	Q	MAX	30	27	33	39	42
t_{PHL}				15	25	33	39	42
t_{PLH}	G	$\overline{Q}$	MAX	30	30	33	39	45
t_{PHL}				15	15	33	39	45

UNIT: ns

: OBSOLETED or NOT RECOMMENDED NEW DESIGNS

85

4-BIT MAGNITUDE COMPARATORS

Logic Diagram

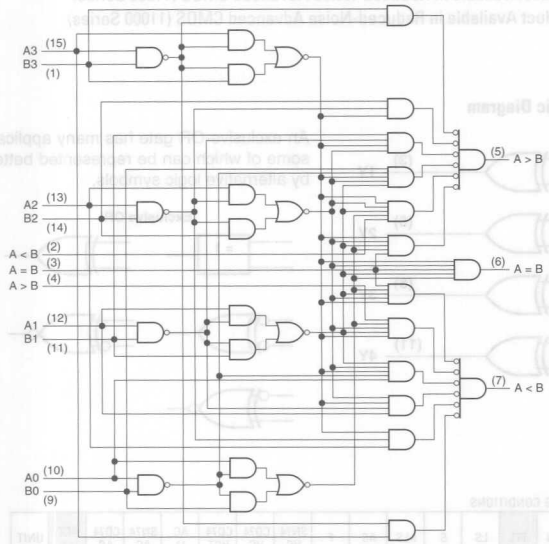

FUNCTION TABLE

COMPARING INPUTS				CASCADING INPUTS			OUTPUTS		
A3, B3	A2, B2	A1, B1	A0, B0	A>B	A<B	A=B	A>B	A<B	A=B
A3>B3	X	X	X	X	X	X	H	L	L
A3<B3	X	X	X	X	X	X	L	H	L
A3=B3	A2>B2	X	X	X	X	X	H	L	L
A3=B3	A2<B2	X	X	X	X	X	L	H	L
A3=B3	A2=B2	A1>B1	X	X	X	X	H	L	L
A3=B3	A2=B2	A1<B1	X	X	X	X	L	H	L
A3=B3	A2=B2	A1=B1	A0>B0	X	X	X	H	L	L
A3=B3	A2=B2	A1=B1	A0<B0	X	X	X	L	H	L
A3=B3	A2=B2	A1=B1	A0=B0	H	L	L	H	L	L
A3=B3	A2=B2	A1=B1	A0=B0	L	H	L	L	H	L
A3=B3	A2=B2	A1=B1	A0=B0	H	H	L	L	L	L
A3=B3	A2=B2	A1=B1	A0=B0	L	L	L	H	H	L
A3=B3	A2=B2	A1=B1	A0=B0	X	X	H	L	L	H

RECOMMENDED OPERATING CONDITIONS

PARAMETER	MAX or MIN	TTL	LS	S	SN74 HC	CD74 HC	CD74 HCT	UNIT
I_{CC}	MAX	88	20	115	0.08	0.16	0.16	mA
I_{OH}	MAX	-0.4	-0.4	-1	-4	-4	-4	mA
I_{OL}	MAX	16	8	20	4	4	4	mA

SWITCHING CHARACTERISTICS

PARAMETER	INPUT	OUTPUT	Nunber of Gate Levels	MAX or MIN	TTL	LS	S	SN74 HC	CD74 HC	CD74 HCT
t_{PLH}	Any A or B data input	A<B, A>B	3	MAX	26	36	16	58	59	56
		A=B	4	MAX	35	45	18	50	53	60
t_{PHL}	Any A or B data input	A<B, A>B	3	MAX	30	30	16.5	58	59	56
		A=B	4	MAX	30	45	16.5	50	53	60
t_{PLH}	A<B, A=B	A>B	1	MAX	11	22	7.5	44	42	45
t_{PHL}	A<B, A=B	A>B	1		17	17	8.5	44	42	45
t_{PLH}	A=B	A=B	2	MAX	20	20	10.5	37	-	-
t_{PHL}	A=B	A=B	2		17	26	7.5	37	-	-
t_{PLH}	A>B, A=B	A<B	1	MAX	11	22	7.5	44	42	47
t_{PHL}	A>B, A=B	A<B	1		17	17	8.5	44	42	47

UNIT: ns

PRODUCTION DATA information is current as of publication date. Products conform to specifications per the terms of Texas Instruments standard warranty. Production processing does not necessarily include testing of all parameters. See www.ti.com/sc/logic for the most current data sheets.

QUADRUPLE 2-INPUT EXCLUSIVE-OR GATES

- $Y = A \oplus B$ or $Y = \overline{A}B + A\overline{B}$
- 74AC11xxx : Product Available in Reduced-Noise Advanced CMOS (11000 Series)
- 74ACT11xxx: Product Available in Reduced-Noise Advanced CMOS (11000 Series)

Logic Diagram

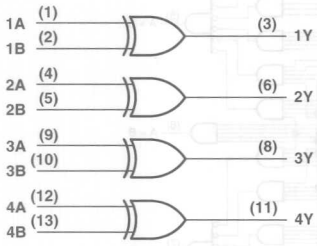

An exclusive-OR gate has many applications, some of which can be represented better by alternative logic symbols.

Exclusive OR

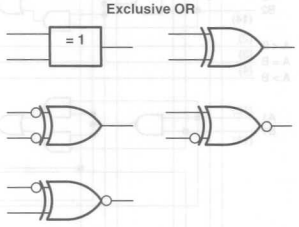

RECOMMENDED OPERATING CONDITIONS

PARAMETER	MAX or MIN	TTL	LS	S	ALS	AS	F	SN74 HC	CD74 HC	CD74 HCT	AC 11	SN74 AC	CD74 AC	ACT 11	UNIT
I_{CC}	MAX	50	10	75	5.9	38	28	0.02	0.04	0.04	0.04	0.02	0.08	0.04	mA
I_{OH}	MAX	16	8	20	8	20	20	4	4	4	24	24	24	24	mA
I_{OL}	MAX	-0.8	-0.4	-1	-0.4	-2	-1	-4	-4	-4	-24	-24	-24	-24	mA

PARAMETER	MAX or MIN	SN74 ACT	CD74 ACT	AHC	AHCT	LV 3V	LV 5V	LVC 3V	UNIT
I_{CC}	MAX	0.04	0.08	0.02	0.02	-	0.02	0.01	mA
I_{OH}	MAX	24	24	8	8	6	12	24	mA
I_{OL}	MAX	-24	-24	-8	-8	-6	-12	-24	mA

SWITCHING CHARACTERISTICS

PARAMETER	INPUT	OUTPUT	MAX or MIN	TTL	LS	S	ALS	AS	F	SN74 HC	CD74 HC	CD74 HCT	AC 11	SN74 AC	CD74 AC	ACT 11
t_{PLH}	A or B	Y	MAX	23	23	10.5	17	7.5	6.5	25	36	48	7.6	9	10.8	9.6
t_{PHL}		Y	MAX	17	17	10	12	6.5	6.5	25	36	48	6.8	9.5	10.8	9
t_{PLH}	A or B	Y	MAX	30	30	10.5	17	6.5	8	25	36	48	7.6	9	10.8	9.6
t_{PHL}		Y	MAX	22	22	10	10	7	7.5	25	36	48	6.8	9.5	10.8	9

PARAMETER	INPUT	OUTPUT	MAX or MIN	SN74 ACT	CD74 ACT	AHC	AHCT	LV 3V	LV 5V	LVC 3V
t_{PLH} Input Low	A or B	Y	MAX	10	14.6	10	10	16.5	10	4.6
t_{PHL} Input Low		Y	MAX	10.5	14.6	10	10	16.5	10	4.6
t_{PLH} Input High	A or B	Y	MAX	10	14.6	10	10	16.5	10	4.6
t_{PHL} Input High		Y	MAX	10.5	14.6	10	10	16.5	10	4.6

UNIT: ns

: OBSOLETED or NOT RECOMMENDED NEW DESIGNS

BCD COUNT SEQUENCE

Count	OUTPUTS			
	Q_D	Q_C	Q_B	Q_A
0	L	L	L	L
1	L	L	L	H
2	L	L	H	L
3	L	L	H	H
4	L	H	L	L
5	L	H	L	H
6	L	H	H	L
7	L	H	H	H
8	H	L	L	L
9	H	L	L	H

BI-QUINARY

Count	OUTPUTS			
	Q_A	Q_D	Q_C	Q_B
0	L	L	L	L
1	L	L	L	H
2	L	L	H	L
3	L	L	H	H
4	L	H	L	L
5	H	L	L	L
6	H	L	L	H
7	H	L	H	L
8	H	L	H	H
9	H	H	L	L

RESET/COUNT FUNCTION TABLE

RESET INPUTS				OUTPUTS			
$R0_{(1)}$	$R0_{(2)}$	$R9_{(1)}$	$R9_{(2)}$	Q_D	Q_C	Q_B	Q_A
H	H	L	X	L	L	L	L
H	H	X	L	L	L	L	L
X	X	H	H	H	L	L	H
X	L	X	L	Count			
L	X	L	X	Count			
L	X	X	L	Count			
X	L	L	X	Count			

Logic Diagram

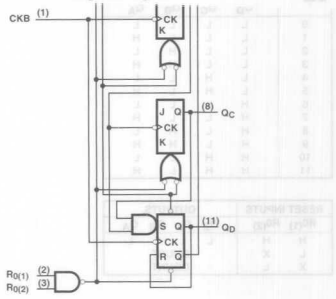

RECOMMENDED OPERATING CONDITIONS

PARAMETER	MAX or MIN	TTL	LS	UNIT
I_{CC}	MAX	39	15	mA
I_{OH}	MAX	-0.8	-0.4	mA
I_{OL}	MAX	16	8	mA

SWITCHING CHARACTERISTICS

PARAMETER		INPUT	OUTPUT	MAX or MIN	TTL	LS
fmax		A	QA	MIN	32	32
		B	QB		16	16
tw	A			MIN	15	15
	B				30	30
	RESET				15	30
tsu	RESET INACTIVE			MIN	25	25
t_{PLH}		A	QA	MAX	16	16
t_{PHL}					18	18
t_{PLH}		A	QD	MAX	48	48
t_{PHL}					50	50
t_{PLH}		B	QB	MAX	16	16
t_{PHL}					21	21
t_{PLH}		B	QC	MAX	32	32
t_{PHL}					35	35
t_{PLH}		B	QC	MAX	32	32
t_{PHL}					35	35
t_{PHL}		Set to 0	Any	MAX	40	40
t_{PLH}		Set to 9	QA, QD	MAX	30	30
t_{PHL}			QB, QC		40	40

UNIT fmax : MHz, other : ns

PRODUCTION DATA information is current as of publication date. Products conform to specifications per the terms of Texas Instruments standard warranty. Production processing does not necessarily include testing of all parameters. See www.ti.com/sc/logic for the most current data sheets.

92

DIVIDE-BY-12 COUNTERS

FUNCTION TABLE

COUNT	OUTPUTS			
	Q_D	Q_C	Q_B	Q_A
0	L	L	L	L
1	L	L	L	H
2	L	L	H	L
3	L	L	H	H
4	L	H	L	L
5	L	H	L	H
6	H	L	L	L
7	H	L	L	H
8	H	L	H	L
9	H	L	H	H
10	H	H	L	L
11	H	H	L	H

RESET INPUTS		OUTPUTS			
$R0_{(1)}$	$R0_{(2)}$	Q_D	Q_C	Q_B	Q_A
H	H	L	L	L	L
L	X	COUNT			
X	L	COUNT			

Logic Diagram

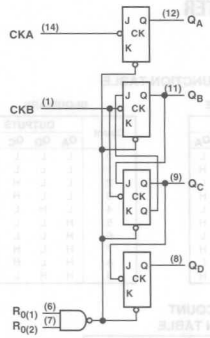

RECOMMENDED OPERATING CONDITIONS

PARAMETER	MAX or MIN	TTL	LS	UNIT
I_{CC}	MAX	39	15	mA
I_{OH}	MAX	-0.8	-0.4	mA
I_{OL}	MAX	16	8	mA

SWITCHING CHARACTERISTICS

PARAMETER		INPUT	OUTPUT	MAX or MIN	TTL	LS
fmax		A	QA	MIN	32	32
		B	QB		16	16
tw	A			MIN	15	15
	B				30	30
	RESET				15	30
tsu	RESET INACTIVE			MIN	25	25
t_{PLH}		A	QA	MAX	16	16
t_{PHL}					18	18
t_{PLH}		A	QD	MAX	48	48
t_{PHL}					50	50
t_{PLH}		B	QB	MAX	16	16
t_{PHL}					21	21
t_{PLH}		B	QC	MAX	16	16
t_{PHL}					21	21
t_{PLH}		B	QD	MAX	32	32
t_{PHL}					35	35
t_{PHL}		Set to 0	Any	MAX	40	40

UNIT fmax : MHz, other : ns

: OBSOLETED or NOT RECOMMENDED NEW DESIGNS

93

4-BIT BINARY COUNTERS

Logic Diagram

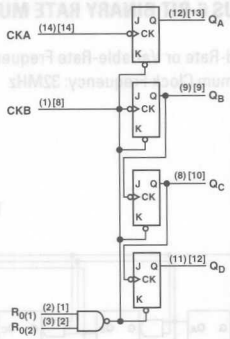

FUNCTION TABLE

COUNT	OUTPUTS			
	Q_D	Q_C	Q_B	Q_A
0	L	L	L	L
1	L	L	L	H
2	L	L	H	L
3	L	L	H	H
4	L	H	L	L
5	L	H	L	H
6	L	H	H	L
7	L	H	H	H
8	H	L	L	L
9	H	L	L	H
10	H	L	H	L
11	H	L	H	H
12	H	H	L	L
13	H	H	L	H
14	H	H	H	L
15	H	H	H	H

RESET INPUTS		OUTPUTS			
R0(1)	R0(2)	Q_D	Q_C	Q_B	Q_A
H	H	L	L	L	L
L	X	COUNT			
X	L	COUNT			

RECOMMENDED OPERATING CONDITIONS

PARAMETER	MAX or MIN	TTL	LS	CD74 HC	CD74 HCT	UNIT
I_{CC}	MAX	39	15	0.16	0.16	mA
I_{OH}	MAX	-0.8	-0.4	-4	-4	mA
I_{OL}	MAX	16	8	4	4	mA

SWITCHING CHARACTERISTICS

PARAMETER		INPUT	OUTPUT	MAX or MIN	TTL	LS	CD74 HC	CD74 HCT
fmax		A	QA	MIN	32	32	20	20
		B	QB		16	16	20	20
tw	A			MIN	15	15	24	24
	B				30	30	24	24
	RESET				15	30	24	24
tsu	RESET INACTIVE			MIN	25	25	-	-
							-	-
t_{PLH}		A	QA	MAX	16	16	38	51
t_{PHL}					18	18	38	51
t_{PLH}		A	QD	MAX	70	70	-	87
t_{PHL}					70	70	-	87
t_{PLH}		B	QB	MAX	16	16	41	51
t_{PHL}					21	21	41	51
t_{PLH}		B	QC	MAX	32	32	56	69
t_{PHL}					35	35	56	69
t_{PLH}		B	QD	MAX	51	51	74	87
t_{PHL}					51	51	74	87
t_{PHL}		Set to 0	ANY	MAX	40	40	-	-

UNIT fmax : MHz, other : ns

PRODUCTION DATA information is current as of publication date. Products conform to specifications per the terms of Texas Instruments standard warranty. Production processing does not necessarily include testing of all parameters. See www.ti.com/sc/logic for the most current data sheets.

Logic Diagram

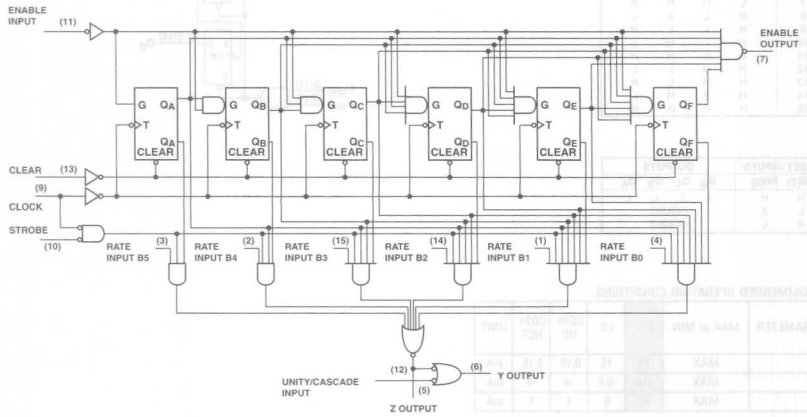

: OBSOLETED or NOT RECOMMENDED NEW DESIGNS

L	L	L	L	L	L	L	L	64	H	1	1	1
L	L	L	L	L	L	L	H	64	H	2	2	1
L	L	L	L	L	L	H	L	64	H	4	4	1
L	L	L	L	L	H	L	L	64	H	8	8	1
L	L	L	L	H	L	L	L	64	H	16	16	1
L	L	L	L	H	L	L	L	64	H	32	32	1
L	L	L	H	L	L	L	L	64	H	63	63	1
L	L	L	H	H	H	H	H	64	H	63	63	1
L	L	L	H	H	H	H	H	64	L	H	63	1
L	L	L	H	L	H	L	L	64	H	40	40	1

RECOMMENDED OPERATING CONDITIONS

PARAMETER	MAX or MIN	TTL	UNIT
I_{CC}	MAX	120	mA
I_{OH}	MAX	16	mA
I_{OL}	MAX	-0.4	mA

SWITCHING CHARACTERISTICS

PARAMETER		INPUT	OUTPUT	MAX or MIN	TTL
fmax		A	QA	MIN	25
tw	CLK			MIN	20
	CLR			MIN	15
tsu	Positive			MIN	25
	Negative			MIN	0
th	Positive			MIN	0
	Negative			MIN	20
t_{PLH}		ENABLE	ENABLE	MAX	20
t_{PHL}				MAX	21
t_{PLH}		STRB	Z	MAX	18
t_{PHL}				MAX	23
t_{PLH}		CLK	Y	MAX	39
t_{PHL}				MAX	30
t_{PLH}		CLK	Z	MAX	18
t_{PHL}				MAX	26
t_{PLH}		RATE	Z	MAX	10
t_{PHL}				MAX	14
t_{PLH}		UNITY /CAS	Y	MAX	14
t_{PHL}				MAX	10
t_{PLH}		STRB	Y	MAX	30
t_{PHL}				MAX	33
t_{PLH}		CLK	ENABLE	MAX	30
t_{PHL}				MAX	33
t_{PLH}		CLR	Y	MAX	36
t_{PHL}			Z	MAX	23
t_{PLH}		RATE	Y	MAX	23
t_{PHL}				MAX	23

UNIT fmax : MHz, other : ns

PRODUCTION DATA information is current as of publication date. Products conform to specifications per the terms of Texas Instruments standard warranty. Production processing does not necessarily include testing of all parameters. See www.ti.com/sc/logic for the most current data sheets.

107

DUAL J-K FLIP-FLOPS WITH CLEAR

Logic Diagram

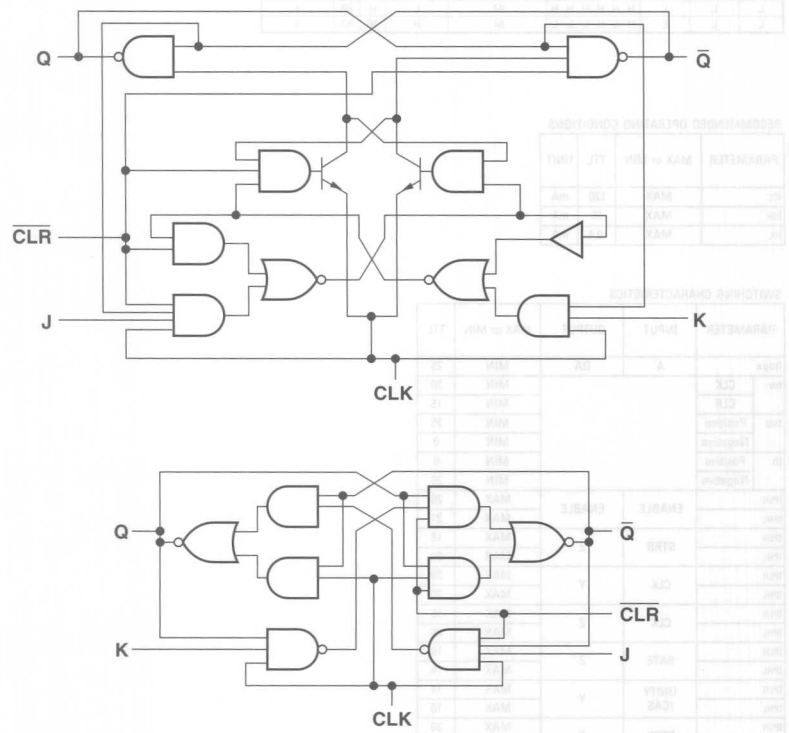

: OBSOLETED or NOT RECOMMENDED NEW DESIGNS

FUNCTION TABLES

'107

INPUTS				OUTPUTS	
$\overline{CLEAR}$	CLOCK	J	K	Q	$\overline{Q}$
L	X	X	X	L	H
H	↓	L	L	Q_0	$\overline{Q}_0$
H	↓	H	L	H	L
H	↓	L	H	L	H
H	↓	H	H	TOGGLE	
H	H	X	X	Q_0	$\overline{Q}_0$

'LS107A,'HC107

INPUTS				OUTPUTS	
$\overline{CLEAR}$	CLOCK	J	K	Q	$\overline{Q}$
L	X	X	X	L	H
H	↓	L	L	Q_0	$\overline{Q}_0$
H	↓	H	L	H	L
H	↓	L	H	L	H
H	↓	H	H	TOGGLE	
H	H	X	X	Q_0	$\overline{Q}_0$

RECOMMENDED OPERATING CONDITIONS

PARAMETER	MAX or MIN	TTL	LS	SN74 HC	CD74 HC	CD74 HCT	UNIT
I_{CC}	MAX	20	6	0.04	0.08	0.08	mA
I_{OH}	MAX	-0.4	-0.4	-4	-4	-4	mA
I_{OL}	MAX	16	8	4	4	4	mA

SWITCHING CHARACTERISTICS

PARAMETER		INPUT	OUTPUT	MAX or MIN	TTL	LS	SN74 HC	CD74 HC	CD74 HC
fmax				MIN	15	30	25	20	19
tw	CLK H			MIN	20	20	20	-	-
	CLK L			MIN	47	-	20	-	-
	$\overline{CP}$			MIN	-	-	-	24	27
	$\overline{CLR}$ L (or $\overline{R}$)			MIN	25	25	20	25	36
tsu	J, K			MIN	0	20	25	30	30
	$\overline{CLR}$ INACTIVE			MIN	0	25	25	-	-
th				MIN	0	0	0	3	5
t_{PLH}		$\overline{CLR}$ (or $\overline{R}$)	$\overline{Q}$	MAX	25	20	39	47	57
t_{PHL}			Q	MAX	40	20	39	47	57
t_{PLH}		CLK	$\overline{Q}$	MAX	25	20	32	-	-
t_{PHL}			Q	MAX	40	20	32	-	-
t_{PLH}		$\overline{CP}$	Q	MAX	-	-	-	51	65
t_{PHL}				MAX	-	-	-	51	65
t_{PLH}		$\overline{CP}$	$\overline{Q}$	MAX	-	-	-	51	60
t_{PHL}				MAX	-	-	-	51	60

UNIT fmax : MHz, other : ns

Logic Diagram

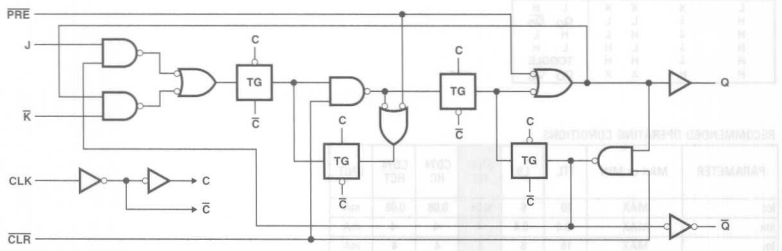

: OBSOLETED or NOT RECOMMENDED NEW DESIGNS

FUNCTION TABLE

$\overline{PRE}$	$\overline{CLR}$	CLK	J	K	Q_0	$\overline{Q}_0$

† The output levels in this configuration are not guaranteed to meet the minimum levels for V_{OH}. Furthermore, this configuration is nonstable; that is, it will not persist when either $\overline{PRE}$ or $\overline{CLR}$ returns to its inactive (high) level.

RECOMMENDED OPERATING CONDITIONS

PARAMETER	MAX or MIN	TTL	LS	ALS	AS	F	SN74 HC	CD74 HC	CD74 HCT	CD74 AC	CD74 ACT	UNIT
I_{CC}	MAX	15	8	4	17	17	0.04	0.08	0.08	0.08	0.08	mA
I_{OH}	MAX	-0.8	-0.4	-0.4	-2	-1	-4	-4	-4	-24	-24	mA
I_{OL}	MAX	16	4	8	20	20	4	4	4	24	24	mA

SWITCHING CHARACTERISTICS

PARAMETER		INPUT	OUTPUT	MAX or MIN	TTL	LS	ALS	AS	F	SN74 HC	CD74 HC	CD74 HCT	CD74 AC	CD74 ACT
fmax				MIN	25	25	34	105	90	25	25	19	100	100
tw	CLK H			MIN	20	25	14.5	4	4	20	-	-	-	-
	CLK L			MIN	20	-	14.5	5.5	5	20	-	-	-	-
	$\overline{CP}$			MIN	-	-	-	-	-	-	24	27	5	5
	$\overline{PRE}$ L			MIN	20	25	15	4	4	25	-	-	-	-
	$\overline{CLR}$ L			MIN	20	25	15	4	4	25	-	-	-	-
	$\overline{R}$			MIN	-	-	-	-	-	-	24	36	4.5	5.5
tsu	J, K			MIN	10	25	15	5.5	3	25	-	-	-	-
	$\overline{PRE}$, $\overline{CLR}$			MIN	10	-	10	2	2	6	-	-	-	-
	J, K to $\overline{CP}$			MIN	-	-	-	-	-	-	30	30	5.5	5.5
th				MIN	6	5	0	0	1	0	3	5	0	1
t_{PLH}		$\overline{PRE}$	Q	MAX	15	25	13	8	8	58	-	-	-	-
t_{PHL}			$\overline{Q}$	MAX	35	40	15	10.5	10.5	58	-	-	-	-
t_{PLH}		$\overline{CLR}$	$\overline{Q}$	MAX	15	25	13	8	8	58	-	-	-	-
t_{PHL}			Q	MAX	25	40	15	10.5	10.5	58	-	-	-	-
t_{PLH}		CLK	$\overline{Q}$,Q	MAX	16	25	16	9	8	44	-	-	-	-
t_{PHL}				MAX	28	40	18	9	9.2	44	-	-	-	-
t_{PLH}		$\overline{CP}$	Q	MAX	-	-	-	-	-	-	51	65	10.3	10.3
t_{PHL}				MAX	-	-	-	-	-	-	51	65	10.3	10.3
t_{PLH}		$\overline{CP}$	$\overline{Q}$	MAX	-	-	-	-	-	-	51	60	10.3	10.3
t_{PHL}				MAX	-	-	-	-	-	-	51	60	10.3	10.3
t_{PLH}		$\overline{R}$	$\overline{Q}$,Q	MAX	-	-	-	-	-	-	47	57	12.2	12.2
t_{PHL}				MAX	-	-	-	-	-	-	47	57	12.2	12.2

UNIT fmax : MHz, other : ns

112

DUAL J-K NEGATIVE-EDGE-TRIGGERED FLIP-FLOPS WITH PRESET AND CLEAR

Logic Diagram

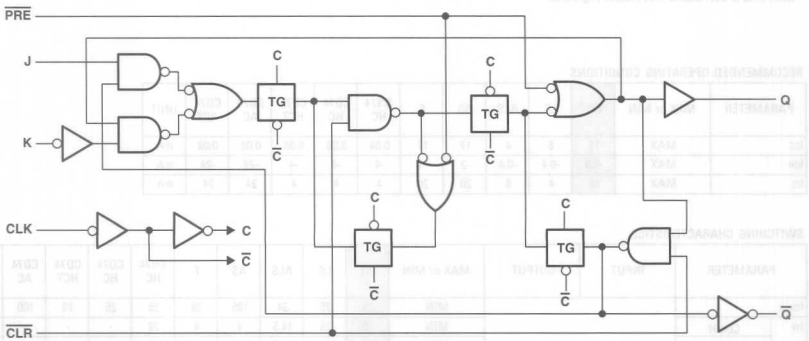

: OBSOLETED or NOT RECOMMENDED NEW DESIGNS

FUNCTION TABLE

INPUTS					OUTPUTS	
$\overline{CLEAR}$	A1	A2	B	B2	Q	$\overline{Q}$
L	X	X	X	X	L	H
X	H	H	X	X	L†	H†
X	X	X	L	X	L†	H†
X	X	X	X	L	L†	H†
H	L	X	↑	H	⎍	⎍
H	L	X	H	↑	⎍	⎍
H	X	L	↑	H	⎍	⎍
H	X	L	H	↑	⎍	⎍
H	H	↓	H	H	⎍	⎍
H	↓	↓	H	H	⎍	⎍
H	↓	H	H	H	⎍	⎍
↑	L	X	H	H	⎍	⎍
↑	X	L	H	H	⎍	⎍

See explanation of function table on page

† These lines of the functional tables assume that the indicated steady-state conditions at the A and B inputs have been set up long enough to complete any pulse started before the set up.

RECOMMENDED OPERATING CONDITIONS

PARAMETER	MAX or MIN	LS	S	ALS	F	SN74 HC	CD74 HC	CD74 HCT	CD74 AC	CD74 ACT	LVC 3V	UNIT
I_{CC}	MAX	6	25	4.5	19	0.04	0.08	0.08	0.08	0.08	0.01	mA
I_{OH}	MAX	-0.4	-1	-0.4	-1	-4	-4	-4	-24	-24	-24	mA
I_{OL}	MAX	8	20	8	20	4	4	4	24	24	24	mA

SWITCHING CHARACTERISTICS

PARAMETER		INPUT	OUTPUT	MAX or MIN	LS	S	ALS	F	SN74 HC	CD74 HC	CD74 HCT	LVC 3V
fmax				MIN	30	80	30	100	20	20	20	150
tw	$\overline{PRE}$, $\overline{CLR}$			MIN	25	8	10	5	25	24	27	-
	CLK H			MIN	20	6	16.5	5	25	-	-	3.3
	CLK L			MIN	-	6.5	16.5	5	25	-	-	3.3
	$\overline{CP}$			MIN	-	-	-	-	-	24	24	-
tsu	DATA			MIN	20	7	22	5	25	24	24	2.3
	$\overline{PRE}$ INACTIVE			MIN	25	-	20	5	25	-	-	2.4
	$\overline{CLR}$ INACTIVE			MIN	20	-	20	5	25	-	-	2.4
th				MIN	0	0	0	0	0	0	3	0.7
t_{PLH}		$\overline{PRE}$ or $\overline{CLR}$	Q or $\overline{Q}$	MAX	20	7	15	7.5	41	-	-	4.8
t_{PHL}				MAX	20	7	18	7.5	41	-	-	4.8
t_{PLH}		CLK	Q or $\overline{Q}$	MAX	20	7	15	7.5	31	-	-	5.9
t_{PHL}				MAX	20	7	19	7.5	31	-	-	5.9
t_{PLH}		$\overline{CP}$	Q or $\overline{Q}$	MAX	-	-	-	-	-	53	53	-
t_{PHL}				MAX	-	-	-	-	-	53	53	-
t_{PLH}		$\overline{S}$	Q or $\overline{Q}$	MAX	-	-	-	-	-	47	48	-
t_{PHL}				MAX	-	-	-	-	-	47	48	-
t_{PLH}		$\overline{R}$	Q or $\overline{Q}$	MAX	-	-	-	-	-	54	56	-
t_{PHL}				MAX	-	-	-	-	-	54	56	-

UNIT fmax : MHz, other : ns

121

Logic Diagram

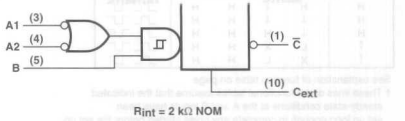

NOTES: 1. An external capacitor may be connected between C_{ext} (positive) and R_{ext}/C_{ext}.
2. To use the internal timing resistor, connect R_{int} to V_{CC}. For improved pulse width accuracy and repestability, connect an external resistor between R_{ext}/C_{ext} and V_{CC} with R_{int} open-circuited.

FUNCTION TABLE

INPUTS			OUTPUTS	
A1	A2	B	Q	$\overline{Q}$
L	X	H	L	H
X	L	H	L†	H†
X	X	L	L†	H†
H	H	X	L†	H†
H	↓	H	⎍	⎍
↓	H	H	⎍	⎍
↓	↓	H	⎍	⎍
L	X	↑	⎍	⎍
X	L	↑	⎍	⎍

See explanation of function table on page

† These lines of the functional tables assume that the indicated steady-state conditions at the A and B inputs have been set up long enough to complete any pulse started before the set up.

RECOMMENDED OPERATING CONDITIONS

PARAMETER	MAX or MIN	TTL	UNIT
I_{CC}	MAX	40	mA
I_{OH}	MAX	-0.4	mA
I_{OL}	MAX	16	mA

SWITCHING CHARACTERISTICS

PARAMETER	INPUT	OUTPUT	MAX or MIN	TTL
tw (IN)			MIN	50
t_{PLH}	A	Q	MAX	70
t_{PHL}	B	Q	MAX	80
t_{PLH}	A	$\overline{Q}$	MAX	55
t_{PHL}	B	$\overline{Q}$	MAX	65

UNIT: NS

- 100% Duty Cycle
- Internal Timing Resistors (5kΩ)

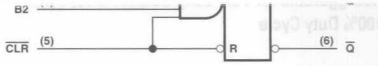

R_{int} is nominally 10 kW for '122 and 'LS122

FUNCTION TABLE

INPUTS					OUTPUTS	
CLEAR	A1	A2	B	B2	Q	$\overline{Q}$
L	X	X	X	X	L	H
X	H	H	X	X	L†	H†
X	X	X	L	X	L†	H†
X	X	X	X	L	L†	H†
H	L	X	↑	H	⎍	⎎
H	L	X	H	↑	⎍	⎎
H	X	L	↑	H	⎍	⎎
H	X	L	H	↑	⎍	⎎
H	H	↓	H	H	⎍	⎎
H	↓	↓	H	H	⎍	⎎
H	↓	H	H	H	⎍	⎎
↑	L	X	H	H	⎍	⎎
↑	X	L	H	H	⎍	⎎

See explanation of function table on page

† These lines of the functional tables assume that the indicated steady-state conditions at the A and B inputs have been set up long enough to complete any pulse started before the set up.

RECOMMENDED OPERATING CONDITIONS

PARAMETER	MAX or MIN	TTL	LS	UNIT
I_{CC}	MAX	66	11	mA
I_{OH}	MAX	-0.8	-0.4	mA
I_{OL}	MAX	16	8	mA

SWITCHING CHARACTERISTICS

PARAMETER	INPUT	OUTPUT	MAX or MIN	TTL	LS
tw			MIN	40	40
t_{PLH}	A	Q	MAX	33	33
	B			28	44
t_{PHL}	A	$\overline{Q}$	MAX	40	45
	B			36	56
t_{PLH}	CLEAR	Q	MAX	27	27
t_{PHL}		$\overline{Q}$		40	45

UNIT: NS

123

DUAL RETRIGGERABLE MONOSTABLE MULTIVIBARATORS WITH CLEAR

- Retriggerable for Very Long Output Pulse, Up to 100% Duty Cycle

Logic Diagram

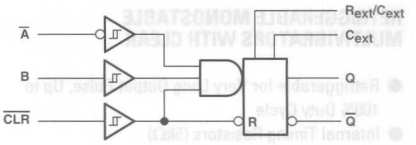

FUNCTION TABLE

INPUTS			OUTPUTS	
$\overline{CLEAR}$	$\overline{A}$ (A)	B	Q	$\overline{Q}$
L	X	X	L	H
X	H	X	L†	H†
X	X	L	L†	H†
H	L	↑	⎍	⎍
H	↓	H	⎍	⎍
↑	L	H	⎍	⎍

See explanation of function table on page

† These lines of the functional tables assume that the indicated steady-state conditions at the A and B inputs have been set up long enough to complete any pulse started before the set up.

RECOMMENDED OPERATING CONDITIONS

PARAMETER	MAX or MIN	TTL	LS	CD74 HC	CD74 HCT	AHC	AHCT	LV 3V	LV 5V	UNIT
I_{CC}	MAX	66	20	0.16	0.16	0.65	0.975	0.28	0.65	mA
I_{OH}	MAX	-0.8	-0.4	-4	-4	-8	-8	-6	-12	mA
I_{OL}	MAX	16	8	4	4	8	8	6	12	mA

SWITCHING CHARACTERISTICS

PARAMETER	INPUT	OUTPUT	MAX or MIN	TTL	LS	CD74 HC	CD74 HCT	AHC	AHCT	LV 3V	LV 5V
tw			MIN	40	40	30	30	5	5	5	5
t_{PLH}	$\overline{A}$ (A)	Q	MAX	33	33	90	-	16	12	27.5	16
	B			28	44	90	-	16	12	27.5	16
t_{PHL}	$\overline{A}$ (A)	$\overline{Q}$	MAX	40	45	96	-	16	12	27.5	16
	B			36	56	96	-	16	12	27.5	16
t_{PLH}	$\overline{CLEAR}$ (R)	Q	MAX	27	27	65	-	13	14	22	13
t_{PHL}		$\overline{Q}$		40	45	65	-	13	14	22	13

UNIT: NS

: OBSOLETED or NOT RECOMMENDED NEW DESIGNS

124

DUAL VOLTAGE-CONTROLLED OSCILLATORS WITH ENABLE INPUTS

- Frequency Spectrum: 1Hz to 60MHz
- Typical fmax: 85MHz
- Typical Power Dissipation: 525mW

Block Diagram

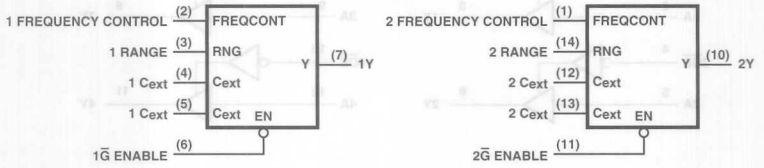

RECOMMENDED OPERATING CONDITIONS

PARAMETER	MAX or MIN	S	UNIT
I_{CC}	MAX	150	mA
I_{OH}	MAX	-1	mA
I_{OL}	MAX	20	mA

SWITCHING CHARACTERISTICS

PARAMETER	MAX or MIN	S
fo	MIN	60

UNIT: NS

Logic Diagram

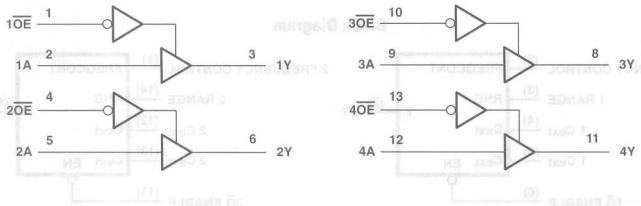

RECOMMENDED OPERATING CONDITIONS

PARAMETER	MAX or MIN	TTL	LS	F	SN74 HC	CD74 HC	SN74 HCT	CD74 HCT	SN74 BCT	SN64 BCT	ABT	UNIT
I_{CC}	MAX	54	20	40	0.08	0.16	0.08	0.16	49	49	30	mA
I_{OH}	MAX	-5.2	-2.6	-15	-6	-6	-6	-6	-15	-15	-32	mA
I_{OL}	MAX	16	24	64	6	6	6	6	64	64	64	mA

PARAMETER	MAX or MIN	LVTH 3V	AHC	AHCT	LV 3V	LV 5V	LVC 3V	ALVC	UNIT
I_{CC}	MAX	7	0.04	0.02	0.02	0.02	0.01	0.01	mA
I_{OH}	MAX	-32	-8	-8	-8	-16	-24	-24	mA
I_{OL}	MAX	64	8	8	8	16	24	24	mA

SWITCHING CHARACTERISTICS

PARAMETER	INPUT	OUTPUT	MAX or MIN	TTL	LS	F	SN74 HC	CD74 HC	SN74 HCT	CD74 HCT	SN74 BCT	SN64 BCT	ABT
t_{PLH}	A	Y	MAX	13	15	6.5	30	30	33	38	5.7	6	4.9
t_{PHL}			MAX	18	18	8	30	30	33	38	7.7	8	4.9
t_{PZH}	$\overline{G}$	Y	MAX	17	20	8.5	30	38	35	38	10.3	11.1	5.9
t_{PZL}			MAX	25	25	9	30	38	35	38	11.7	12.8	6.8
t_{PHZ}			MAX	8	20	6	30	38	33	42	8.9	9.4	6.2
t_{PLZ}			MAX	12	20	6	30	38	33	42	8.6	9.9	6.2

PARAMETER	INPUT	OUTPUT	MAX or MIN	LVTH 3V	AHC	AHCT	LV 3V	LV 5V	LVC 3V	ALVC
t_{PLH}	A	Y	MAX	3.5	8.5	8.5	13	8.5	4.8	2.8
t_{PHL}			MAX	3.9	8.5	8.5	13	8.5	4.8	2.8
t_{PZH}	$\overline{G}$	Y	MAX	4	8	8	13	8	5.4	3.5
t_{PZL}			MAX	4	8	8	13	8	5.4	3.5
t_{PHZ}			MAX	4.5	10	10	15	10	4.6	4
t_{PLZ}			MAX	4.5	10	10	15	10	4.6	4

UNIT: NS

: ***OBSOLETED or NOT RECOMMENDED NEW DESIGNS***

Logic Diagram

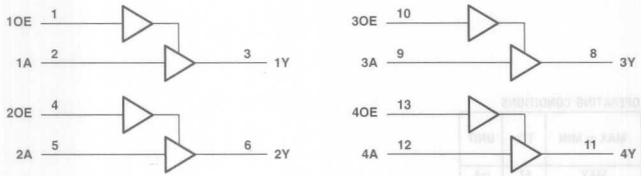

RECOMMENDED OPERATING CONDITIONS

PARAMETER	MAX or MIN	TTL	LS	F	SN74 HC	CD74 HC	CD74 HCT	SN74 BCT	SN64 BCT	ABT	LVTH 3V	UNIT
I_{CC}	MAX	62	22	48	0.08	0.16	0.16	51	51	30	7	mA
I_{OH}	MAX	-5.2	-2.6	-15	-6	-6	-6	-15	-15	-32	-32	mA
I_{OL}	MAX	16	24	64	6	6	6	64	64	64	64	mA

PARAMETER	MAX or MIN	AHC	AHCT	LV 3V	LV 5V	LVC 3V	ALVC	UNIT
I_{CC}	MAX	0.04	0.02	0.02	0.02	0.01	0.01	mA
I_{OH}	MAX	-8	-8	-8	-16	-24	-24	mA
I_{OL}	MAX	8	8	8	16	24	24	mA

SWITCHING CHARACTERISTICS

PARAMETER	INPUT	OUTPUT	MAX or MIN	TTL	LS	F	SN74 HC	CD74 HC	CD74 HCT	SN74 BCT	SN64 BCT	ABT	LVTH 3V
t_{PLH}	A	Y	MAX	13	15	7	30	30	36	6.3	6.3	6.3	3.8
t_{PHL}			MAX	18	18	8.5	30	30	36	7.4	7.4	5.7	3.9
t_{PZH}	G	Y	MAX	18	25	8.5	30	38	38	7.9	7.9	6.5	5.4
t_{PZL}			MAX	25	35	8.5	30	38	38	10.5	10.5	6.5	5.2
t_{PHZ}			MAX	16	25	7.5	30	38	42	10	10	6.8	3.8
t_{PLZ}			MAX	18	25	8	30	38	42	12.3	12.3	6.7	5.5

PARAMETER	INPUT	OUTPUT	MAX or MIN	AHC	AHCT	LV 5V	LV 3V	LVC 3V	ALVC
t_{PLH}	A	Y	MAX	8.5	8.5	8.5	13	4.7	3.1
t_{PHL}			MAX	8.5	8.5	8.5	13	4.7	3.1
t_{PZH}	G	Y	MAX	8	8	8	13	5.7	3.3
t_{PZL}			MAX	8	8	8	13	5.7	3.3
t_{PHZ}			MAX	10	10	10	15	6	3.7
t_{PLZ}			MAX	10	10	10	15	6	3.7

UNIT: ns

PRODUCTION DATA information is current as of publication date. Products conform to specifications per the terms of Texas Instruments standard warranty.
Production processing does not necessarily include testing of all parameters. See www.ti.com/sc/logic for the most current data sheets.

128

50-Ω LINE DRIVERS

● $Y = \overline{A + B}$

Logic Diagram

RECOMMENDED OPERATING CONDITIONS

PARAMETER	MAX or MIN	TTL	UNIT
I_{CC}	MAX	57	mA
I_{OH}	MAX	-42.4	mA
I_{OL}	MAX	48	mA

SWITCHING CHARACTERISTICS

PARAMETER	INPUT	OUTPUT	MAX or MIN	TTL
t_{PLH}	A, B	Y	MAX	9
t_{PHL}	A, B	Y	MAX	12

UNIT: ns

132

QUADRUPLE 2-INPUT POSITIVE-NAND SCHMITT TRIGGERS

● $Y = \overline{A \bullet B}$

Logic Diagram

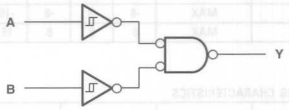

RECOMMENDED OPERATING CONDITIONS

PARAMETER	MAX or MIN	TTL	LS	S	SN74 HC	CD74 HC	CD74 HCT	AHC	AHCT	LV 3V	LV 5V	UNIT
I_{CC}	MAX	40	14	68	0.02	0.04	0.04	0.02	0.02	0.02	0.02	mA
I_{OH}	MAX	-0.8	-0.4	-1	-4	-4	-4	-8	-8	-6	-12	mA
I_{OL}	MAX	16	8	20	4	4	4	8	8	6	12	mA

SWITCHING CHARACTERISTICS

PARAMETER	INPUT	OUTPUT	MAX or MIN	TTL	LS	S	SN74 HC	CD74 HC	CD74 HCT	AHC	AHCT	LV 3V	LV 5V
t_{PLH}	A, B	Y	MAX	22	22	10.5	31	38	50	11	10	17.5	11
t_{PHL}	A, B	Y	MAX	22	22	13	31	38	50	11	8	17.5	11

UNIT: ns

: OBSOLETED or NOT RECOMMENDED NEW DESIGNS

133

13-INPUT POSITIVE-NAND GATES

● $Y = \overline{A \bullet B \bullet C \bullet D \bullet E \bullet F \bullet G \bullet H \bullet I \bullet J \bullet K \bullet L \bullet M}$

Logic Diagram

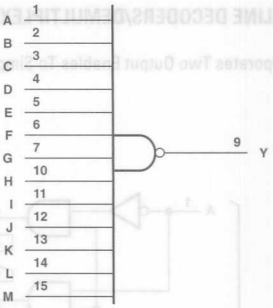

RECOMMENDED OPERATING CONDITIONS

PARAMETER	MAX or MIN	S	ALS	SN74 HC	UNIT
I_{CC}	MAX	10	0.34	0.02	mA
I_{OH}	MAX	-1	-0.4	-4	mA
I_{OL}	MAX	20	8	4	mA

SWITCHING CHARACTERISTICS

PARAMETER	INPUT	OUTPUT	MAX or MIN	S	ALS	SN74 HC
t_{PLH}	A to M	Y	MAX	6	11	38
t_{PHL}	A to M	Y	MAX	7	25	38

UNIT: ns

136

QUAD EXCLUSIVE-OR GATES WITH OPEN-COLLECTOR OUTPUTS

● $Y = A \oplus B = \overline{A}B + A\overline{B}$

Logic Diagram

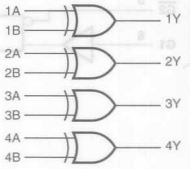

FUNCTION TABLE

INPUTS A	INPUTS B	OUTPUT Y
L	L	L
L	H	H
H	L	H
H	H	L

RECOMMENDED OPERATING CONDITIONS

PARAMETER	MAX or MIN	TTL	LS	ALS	AS	UNIT
I_{CC}	MAX	50	10	5.9	31	mA
V_{OH}	MAX	5.5	5.5	5.5	5.5	V
I_{OL}	MAX	16	8	8	20	mA

SWITCHING CHARACTERISTICS

PARAMETER	INPUT	OUTPUT	MAX or MIN	TTL	LS	ALS	AS
t_{PLH}	A or B	Y (Other Output = L)	MAX	18	30	50	12.5
t_{PHL}	A or B	Y (Other Output = L)	MAX	50	30	15	7.1
t_{PLH}	A or B	Y (Other Output = L)	MAX	22	30	50	11.4
t_{PHL}	A or B	Y (Other Output = L)	MAX	55	30	15	10.7

UNIT: ns

PRODUCTION DATA information is current as of publication date. Products conform to specifications per the terms of Texas Instruments standard warranty. Production processing does not necessarily include testing of all parameters. See www.ti.com/sc/logic for the most current data sheets.

Logic Diagram

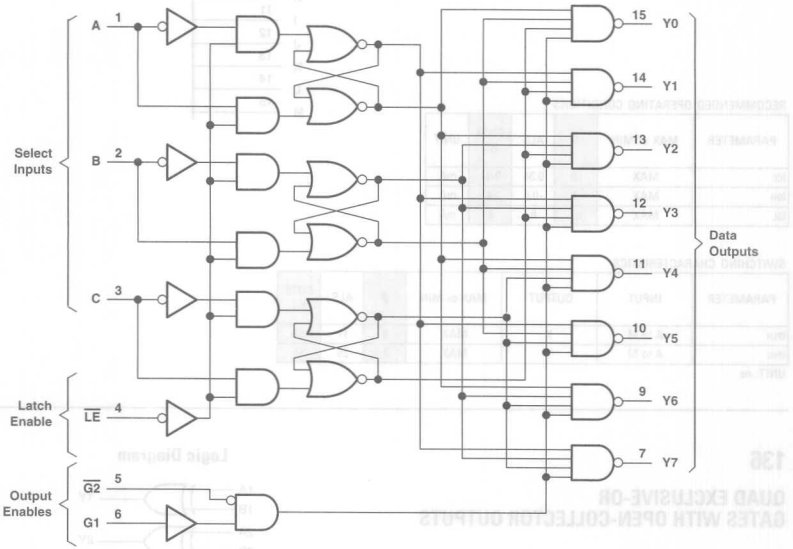

: OBSOLETED or NOT RECOMMENDED NEW DESIGNS

L	H	L	L	H	L	H	H	L	H	H	H	H	H
L	H	L	L	H	H	H	H	H	L	H	H	H	H
L	H	L	H	L	L	H	H	H	H	L	H	H	H
L	H	L	H	L	H	H	H	H	H	H	L	H	H
L	H	L	H	H	L	H	H	H	H	H	H	L	H
L	H	L	H	H	H	H	H	H	H	H	H	H	L
H	H	L	X	X	X	Depends upon the address previously applied while LE was at a logic low.							

RECOMMENDED OPERATING CONDITIONS

PARAMETER	MAX or MIN	LS	ALS	AS	SN74 HC	CD74 HC	SN74 HCT	CD74 HCT	UNIT
I_{CC}	MAX	18	11	24	0.08	0.16	0.08	0.16	mA
I_{OH}	MAX	-0.4	-0.4	-2	-4	-4	-4	-4	mA
I_{OL}	MAX	8	8	20	4	4	4	4	mA

SWITCHING CHARACTERISTICS

PARAMETER	INPUT	OUTPUT	MAX or MIN	LS	ALS	AS	SN74 HC	CD74 HC	SN74 HCT	CD74 HCT
t_{PLH}	A, B, C	Y (CD74: $\overline{Y}$)	MAX	24	20	12.5	48	54	48	57
t_{PHL}			MAX	38	20	12.5	48	54	48	57
t_{PLH}	$\overline{G2}$	Y (CD74: $\overline{Y}$)	MAX	21	12	8	36	44	36	56
t_{PHL}			MAX	27	15	8.5	36	44	36	56
t_{PLH}	G1	Y (CD74: $\overline{Y}$)	MAX	21	17	10	36	44	36	53
t_{PHL}			MAX	27	15	9	36	44	36	53
t_{PLH}	$\overline{LE}$ (CD74: LE)	Y (CD74: $\overline{Y}$)	MAX	27	22	13.5	48	57	52	66
t_{PHL}			MAX	38	20	14	48	57	52	66

UNIT:ns

138

3-TO-8 LINE DECODERS/DEMULTIPLEXRS

- 3 Enable Inputs to Simplify Cascading and /or Data Reception
- 74AC11xxx: Product Available in Reduced-Noise Advanced CMOS (11000 Series)
- 74ACT11xxx: Product Available in Reduced-Noise Advanced CMOS (11000 Series)

Logic Diagram

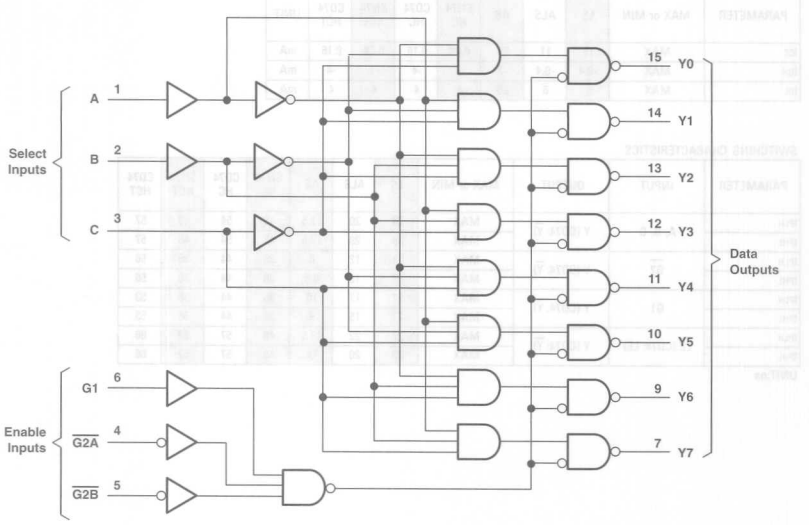

: OBSOLETED or NOT RECOMMENDED NEW DESIGNS

FUNCTION TABLE

INPUTS					OUTPUTS						
ENABLE		SELECT									
G1	$\overline{G2}^*$	C	B	A	Y0	Y1	Y2	Y3	Y4	Y5	Y6	Y7
X	H	X	X	X	H	H	H	H	H	H	H	H
L	X	X	X	X	H	H	H	H	H	H	H	H
H	L	L	L	L	L	H	H	H	H	H	H	H
H	L	L	L	H	H	L	H	H	H	H	H	H
H	L	L	H	L	H	H	L	H	H	H	H	H
H	L	L	H	H	H	H	H	L	H	H	H	H
H	L	H	L	L	H	H	H	H	L	H	H	H
H	L	H	L	H	H	H	H	H	H	L	H	H
H	L	H	H	L	H	H	H	H	H	H	L	H
H	L	H	H	H	H	H	H	H	H	H	H	L

$\overline{G2}^* = \overline{G2A} \cdot \overline{G2B}$

RECOMMENDED OPERATING CONDITIONS

PARAMETER	MAX or MIN	LS	S	ALS	AS	F	SN74 HC	CD74 HC	SN74 HCT	CD74 HCT	AC 11	UNIT
I_{CC}	MAX	10	74	10	20	20	0.08	0.16	0.08	0.16	0.04	mA
I_{OH}	MAX	-0.4	-1	-0.4	-2	-1	-4	-4	-4	-4	-24	mA
I_{OL}	MAX	8	20	8	20	20	4	4	4	4	24	mA

PARAMETER	MAX or MIN	CD74 AC	ACT 11	CD74 ACT	AHC	AHCT	LV 3V	LV 5V	LVC 3V	UNIT
I_{CC}	MAX	0.16	0.04	0.16	0.04	0.04	0.02	0.02	0.01	mA
I_{OH}	MAX	-24	-24	-24	-8	-8	-6	-12	-24	mA
I_{OL}	MAX	24	24	24	8	8	6	12	24	mA

SWITCHING CHARACTERISTICS

PARAMETER	INPUT	OUTPUT	MAX or MIN	LS	S	ALS	AS	F	SN74 HC	CD74 HC	SN74 HCT	CD74 HCT	AC 11
t_{PLH}	A, B, C	Y (CD74:$\overline{Y}$)	MAX	27	12	22	10	8.5	45	45	45	53	8.1
t_{PHL}			MAX	39	12	18	9.5	9	45	45	45	53	8.8
t_{PLH}	$\overline{G2}$	Y (CD74:$\overline{Y}$)	MAX	26	11	17	7.5	8	39	53	42	53	8.3
t_{PHL}			MAX	38	11	17	8.5	7.5	39	53	42	53	8.3
t_{PLH}	G1	Y (CD74:$\overline{Y}$)	MAX	26	11	17	10	9	39	53	42	53	7.5
t_{PHL}			MAX	38	11	17	10	8.5	39	53	42	53	7.7

PARAMETER	INPUT	OUTPUT	MAX or MIN	CD74 AC	ACT 11	CD74 ACT	AHC	AHCT	LV 3V	LV 5V	LVC 3V
t_{PLH}	A, B, C	Y (CD74:$\overline{Y}$)	MAX	11	9.8	12	11.5	13	18	11.5	6.7
t_{PHL}			MAX	11	9.7	12	11.5	13	18	11.5	6.7
t_{PLH}	$\overline{G2}$	Y (CD74:$\overline{Y}$)	MAX	10	8.9	10.5	11.5	12	18	11.5	6.5
t_{PHL}			MAX	10	8.9	10.5	11.5	12	18	11.5	6.5
t_{PLH}	G1	Y (CD74:$\overline{Y}$)	MAX	11	9.3	11	11.5	11.5	18.5	11.5	5.8
t_{PHL}			MAX	11	9.8	11	11.5	11.5	18.5	11.5	5.8

UNIT: ns

Logic Diagram

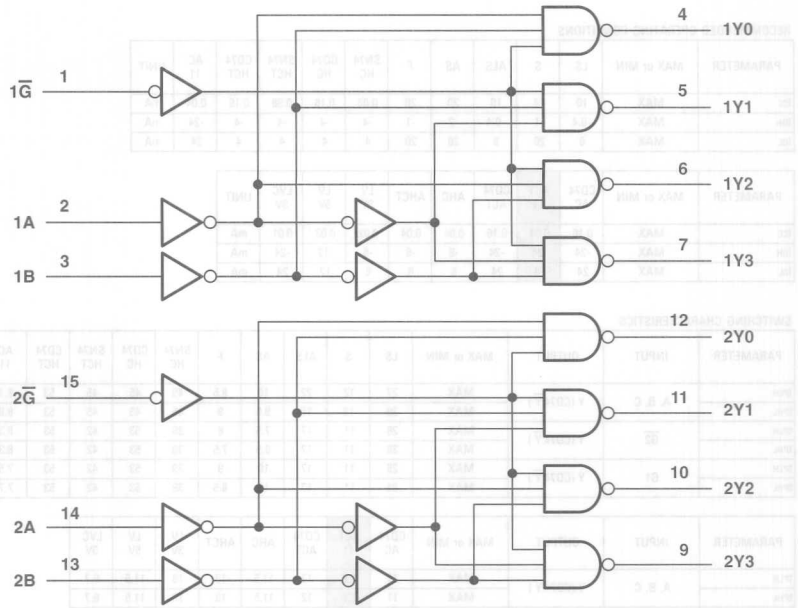

: OBSOLETED or NOT RECOMMENDED NEW DESIGNS

FUNCTION TABLE

INPUTS			OUTPUTS			
ENABLE	SELECT					
$\overline{G}$	B	A	Y0	Y1	Y2	Y3
H	X	X	H	H	H	H
L	L	L	L	H	H	H
L	L	H	H	L	H	H
L	H	L	H	H	L	H
L	H	H	H	H	H	L

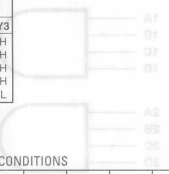

RECOMMENDED OPERATING CONDITIONS

PARAMETER	MAX or MIN	LS	S	ALS	SN74 HC	CD74 HC	SN74 HCT	CD74 HCT	CD74 AC	ACT 11	CD74 ACT	UNIT
I_{CC}	MAX	11	90	13	0.08	0.08	0.08	0.16	0.16	0.08	0.16	mA
I_{OH}	MAX	-0.4	-1	-0.4	-4	-4	-4	-4	-24	-24	-24	mA
I_{OL}	MAX	8	20	8	4	4	4	4	24	24	24	mA

PARAMETER	MAX or MIN	AHC	AHCT	LV 3V	LV 5V	LVC 3V	UNIT
I_{CC}	MAX	0.04	0.02	-	0.02	0.01	mA
I_{OH}	MAX	-8	-8	-6	-12	-24	mA
I_{OL}	MAX	8	8	6	12	24	mA

SWITCHING CHARACTERISTICS

PARAMETER	INPUT	OUTPUT	MAX or MIN	LS	S	ALS	SN74 HC	CD74 HC	SN74 HCT	CD74 HCT	CD74 AC	ACT 11	CD74 ACT
t_{PLH}	A or B	Y (CD74: $\overline{Y}$)	MAX	29	12	14	44	44	43	51	10.5	8.5	11.5
t_{PHL}	A or B	Y (CD74: $\overline{Y}$)	MAX	38	12	14	44	44	43	51	10.5	8.5	11.5
t_{PLH}	G	Y (CD74: $\overline{Y}$)	MAX	24	8	14	44	41	43	51	10.5	7.9	12
t_{PHL}	G	Y (CD74: $\overline{Y}$)	MAX	32	10	15	44	41	43	51	10.5	7.5	12

PARAMETER	INPUT	OUTPUT	MAX or MIN	AHC	AHCT	LV 3V	LV 5V	LVC 3V
t_{PLH}	A or B	Y (CD74: $\overline{Y}$)	MAX	10.5	10.5	16.5	10.5	6.2
t_{PHL}	A or B	Y (CD74: $\overline{Y}$)	MAX	10.5	10.5	16.5	10.5	6.2
t_{PLH}	G	Y (CD74: $\overline{Y}$)	MAX	9.5	9.5	14.5	9.5	4.7
t_{PHL}	G	Y (CD74: $\overline{Y}$)	MAX	9.5	9.5	14.5	9.5	4.7

UNIT: ns

140

DUAL 4-INPUT POSITIVE-NAND 50-Ω LINE DRIVERS

● $Y = \overline{ABCD}$

Logic Diagram

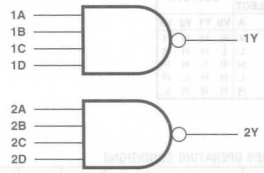

RECOMMENDED OPERATING CONDITIONS

PARAMETER	MAX or MIN	S	UNIT
I_{CC}	MAX	44	mA
I_{OH}	MAX	-40	mA
I_{OL}	MAX	60	mA

SWITCHING CHARACTERISTICS

PARAMETER	INPUT	OUTPUT	MAX or MIN	S
t_{PLH}	A, B, C, D	Y	MAX	6.5
t_{PHL}			MAX	6.5

UNIT: ns

: OBSOLETED or NOT RECOMMENDED NEW DESIGNS

145

BCD-TO-DECIMAL DECODERS/DRIVERS FOR LAMPS, RELAYS, MOS

- Sink-Current Capability: 80mA
- Low Power Dissipation (SN74LS): 35mW (typ)

Logic Diagram

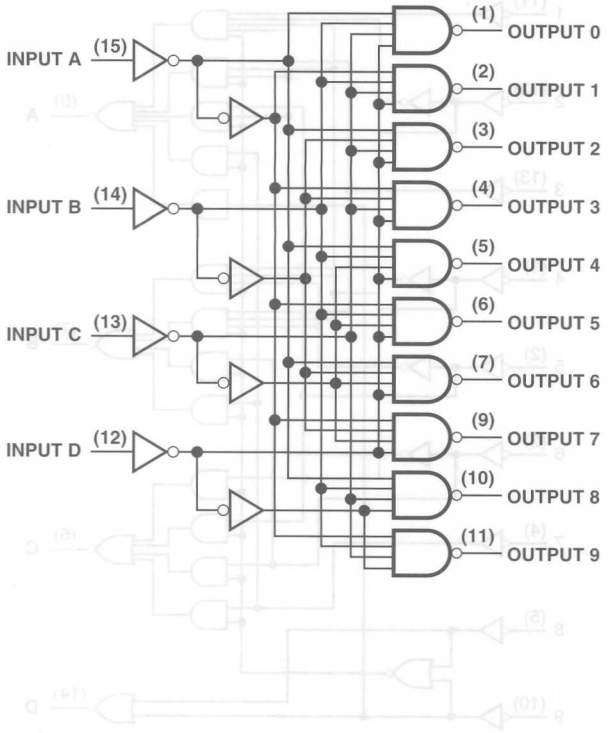

FUNCTION TABLE

No.	INPUTS				OUTPUTS									
	D	C	B	A	0	1	2	3	4	5	6	7	8	9
0	L	L	L	L	L	H	H	H	H	H	H	H	H	H
1	L	L	L	H	H	L	H	H	H	H	H	H	H	H
2	L	L	H	L	H	H	L	H	H	H	H	H	H	H
3	L	L	H	H	H	H	H	L	H	H	H	H	H	H
4	L	H	L	L	H	H	H	H	L	H	H	H	H	H
5	L	H	L	H	H	H	H	H	H	L	H	H	H	H
6	L	H	H	L	H	H	H	H	H	H	L	H	H	H
7	L	H	H	H	H	H	H	H	H	H	H	L	H	H
8	H	L	L	L	H	H	H	H	H	H	H	H	L	H
9	H	L	L	H	H	H	H	H	H	H	H	H	H	L
INVALID	H	L	H	L	H	H	H	H	H	H	H	H	H	H
	H	L	H	H	H	H	H	H	H	H	H	H	H	H
	H	H	L	L	H	H	H	H	H	H	H	H	H	H
	H	H	L	H	H	H	H	H	H	H	H	H	H	H
	H	H	H	L	H	H	H	H	H	H	H	H	H	H
	H	H	H	H	H	H	H	H	H	H	H	H	H	H

RECOMMENDED OPERATING CONDITIONS

PARAMETER	MAX or MIN	TTL	LS	UNIT
I_{CC}	MAX	70	13	mA
V_O (OFF)	MAX	15	15	mA

SWITCHING CHARACTERISTICS

PARAMETER	MAX or MIN	TTL	LS
t_{PLH}	MAX	50	50
t_{PHL}	MAX	50	50

UNIT: ns

PRODUCTION DATA information is current as of publication date. Products conform to specifications per the terms of Texas Instruments standard warranty. Production processing does not necessarily include testing of all parameters. See www.ti.com/sc/logic for the most current data sheets.

147

10-TO-4 LINE PRIORITY ENCODER

Logic Diagram

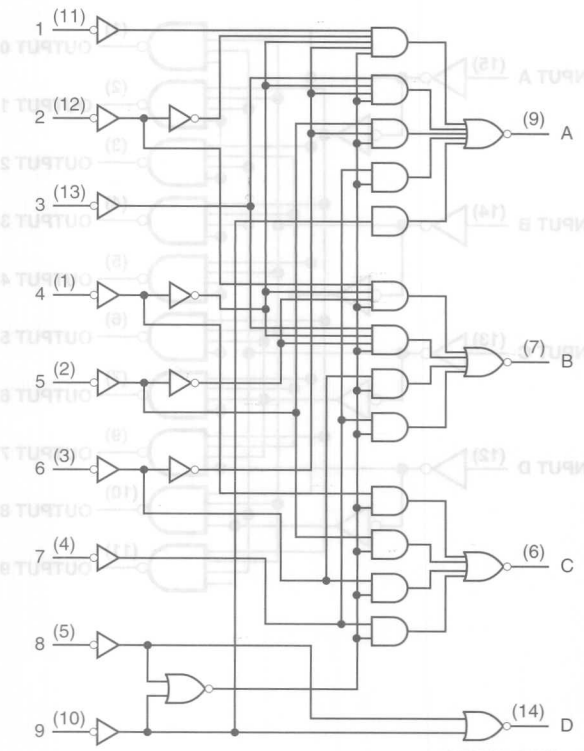

: OBSOLETED or NOT RECOMMENDED NEW DESIGNS

FUNCTION TABLE

INPUTS									OUTPUTS			
1	2	3	4	5	6	7	8	9	D	C	B	A
H	H	H	H	H	H	H	H	H	H	H	H	H
X	X	X	X	X	X	X	X	L	L	H	H	L
X	X	X	X	X	X	X	L	H	L	H	H	H
X	X	X	X	X	X	L	H	H	H	L	L	L
X	X	X	X	X	L	H	H	H	H	L	L	H
X	X	X	X	L	H	H	H	H	H	L	H	L
X	X	X	L	H	H	H	H	H	H	L	H	H
X	X	L	H	H	H	H	H	H	H	H	L	L
X	L	H	H	H	H	H	H	H	H	H	L	H
L	H	H	H	H	H	H	H	H	H	H	H	L

RECOMMENDED OPERATING CONDITIONS

PARAMETER	MAX or MIN	TTL	LS	SN74 HC	CD74 HC	CD74 HCT	UNIT
I_{CC}	MAX	70	20	0.08	0.16	0.16	mA
I_{OH}	MAX	-0.8	-0.4	-4	-4	-4	mA
I_{OL}	MAX	16	8	4	4	4	mA

SWITCHING CHARACTERISTICS

PARAMETER	MAX or MIN	TTL	LS	SN74 HC	CD74 HC	CD74 HCT
t_{PLH}	MAX	19	33	48	48	53
t_{PHL}	MAX	19	23	48	48	53

UNIT:ns

148

8-TO 3-LINE OCTAL PRIORITY ENCODERS

Logic Diagram

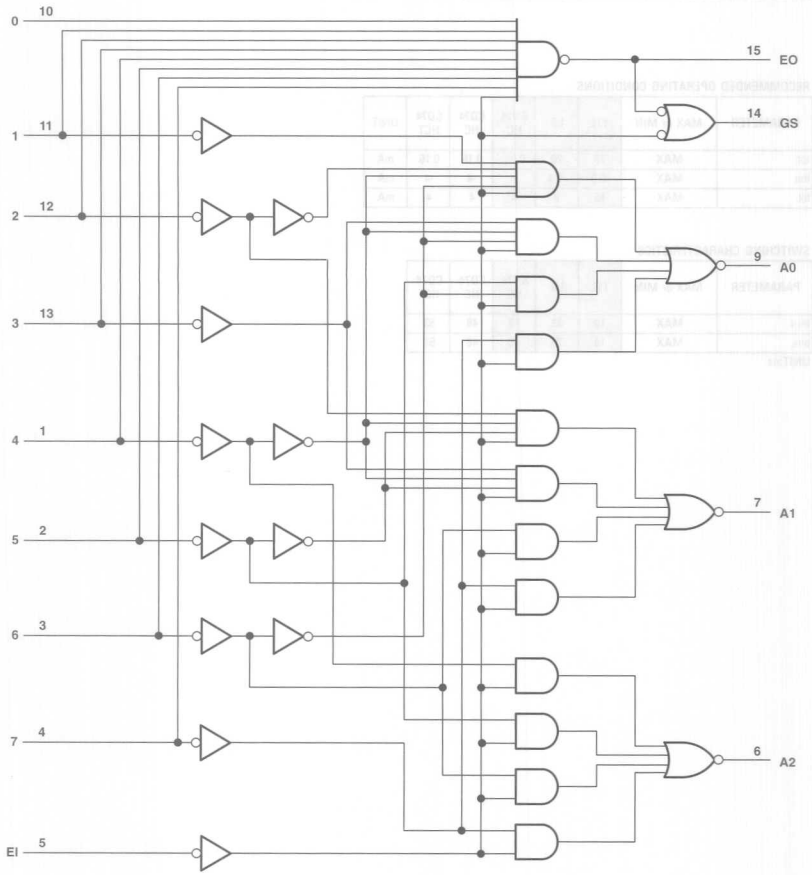

: OBSOLETED or NOT RECOMMENDED NEW DESIGNS

FUNCTION TABLE

INPUTS								OUTPUTS				
EI	0	1	2	3	4	5	6	7	A2	A1	A0	GS	EO
H	X	X	X	X	X	X	X	X	H	H	H	H	H
L	H	H	H	H	H	H	H	H	H	H	H	H	L
L	X	X	X	X	X	X	X	L	L	L	L	L	H
L	X	X	X	X	X	X	L	H	L	L	H	L	H
L	X	X	X	X	X	L	H	H	L	H	L	L	H
L	X	X	X	X	L	H	H	H	L	H	H	L	H
L	X	X	X	L	H	H	H	H	H	L	L	L	H
L	X	X	L	H	H	H	H	H	H	L	H	L	H
L	X	L	H	H	H	H	H	H	H	H	L	L	H
L	L	H	H	H	H	H	H	H	H	H	H	L	H

RECOMMENDED OPERATING CONDITIONS

PARAMETER	MAX or MIN	TTL	LS	SN74 HC	UNIT
I_{CC}	MAX	60	20	0.08	mA
I_{OL}	MAX	16	8	4	mA
I_{OH}	MAX	-0.8	-0.4	-4	mA

SWITCHING CHARACTERISTICS

PARAMETER	INPUT	OUTPUT	WAVEFORM	MAX or MIN	TTL	LS	SN74 HC
t_{PLH}	1 to 7	A0, A1 or A2	In-phase output	MAX	15	18	45
t_{PHL}					14	25	45
t_{PLH}	1 to 7	A0, A1 or A2	Out-of-phase output	MAX	19	36	45
t_{PHL}					19	29	45
t_{PLH}	0 to 7	EO	Out-of-phase output	MAX	10	18	38
t_{PHL}					25	40	38
t_{PLH}	0 to 7	GS	In-phase output	MAX	30	55	48
t_{PHL}					25	21	48
t_{PLH}	E1	A0, A1 or A2	In-phase output	MAX	15	25	49
t_{PHL}					15	25	49
t_{PLH}	E1	GS	In-phase output	MAX	12	17	36
t_{PHL}					15	36	36
t_{PLH}	E1	EO	In-phase output	MAX	15	21	41
t_{PHL}					30	35	41

UNIT: ns

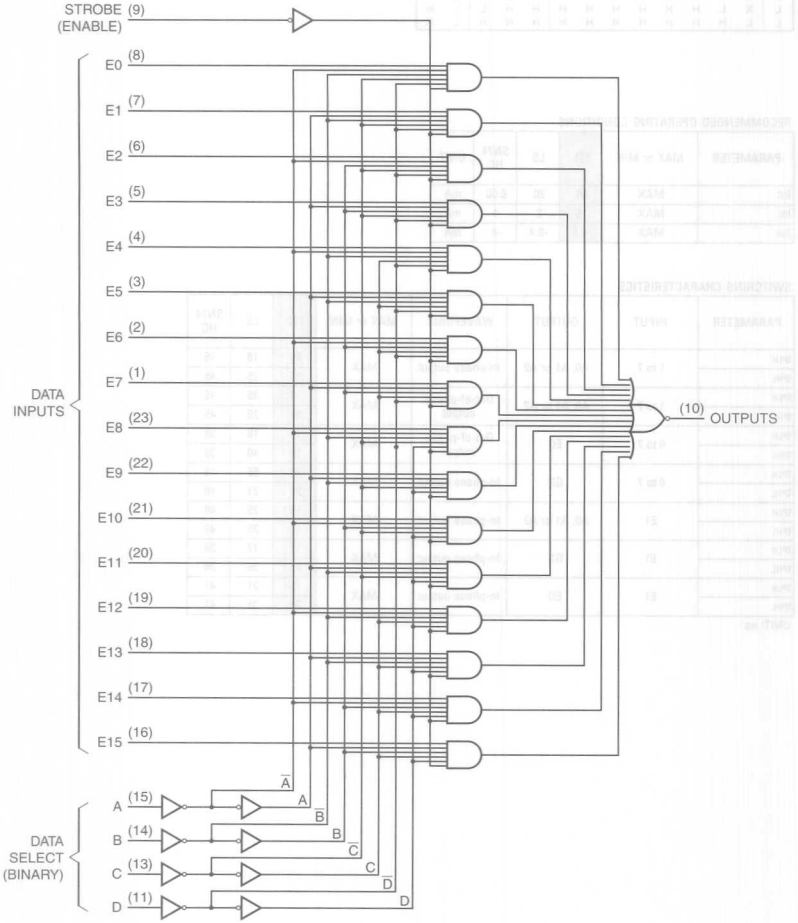

: OBSOLETED or NOT RECOMMENDED NEW DESIGNS

FUNCTION TABLE

INPUTS					OUTPUT
SELECT				STROBE	
D	C	B	A	$\overline{G}$	W
X	X	X	X	H	H
L	L	L	L	L	$\overline{E0}$
L	L	L	H	L	$\overline{E1}$
L	L	H	L	L	$\overline{E2}$
L	L	H	H	L	$\overline{E3}$
L	H	L	L	L	$\overline{E4}$
L	H	L	H	L	$\overline{E5}$
L	H	H	L	L	$\overline{E6}$
L	H	H	H	L	$\overline{E7}$
H	L	L	L	L	$\overline{E8}$
H	L	L	H	L	$\overline{E9}$
H	L	H	L	L	$\overline{E10}$
H	L	H	H	L	$\overline{E11}$
H	H	L	L	L	$\overline{E12}$
H	H	L	H	L	$\overline{E13}$
H	H	H	L	L	$\overline{E14}$
H	H	H	H	L	$\overline{E15}$

NOTES:
H = High Level, L = Low Level, X = irrelevant
$\overline{E0}$, $\overline{E1}$ ... $\overline{E15}$ = the complement of the level of the respective E input
D0, D1 ... D7 = the level of the D respective input

RECOMMENDED OPERATING CONDITIONS

PARAMETER	MAX or MIN	TTL	UNIT
I_{CC}	MAX	48	mA
I_{OH}	MAX	-0.8	mA
I_{OL}	MAX	16	mA

SWITCHING CHARACTERISTICS

PARAMETER	INPUT	OUTPUT	MAX or MIN	TTL
t_{PLH}	A, B, C or D	W	MAX	35
t_{PHL}				33
t_{PLH}	Strobe $\overline{G}$	W	MAX	24
t_{PHL}				30
t_{PLH}	E0 thru E15 or E0 thru D7	W	MAX	14
t_{PHL}				20

UNIT:ns

151

8-TO-1 LINE DATA SELECTORS/MULTIPLEXERS

Logic Diagram

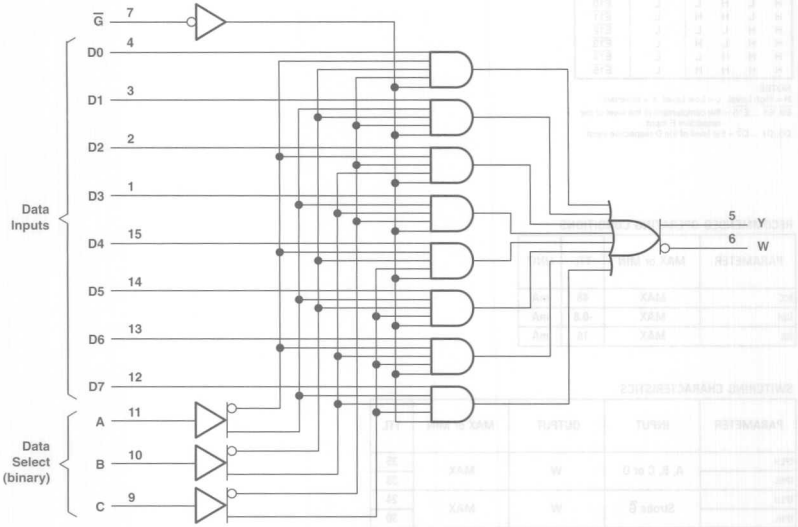

: OBSOLETED or NOT RECOMMENDED NEW DESIGNS

FUNCTION TABLE

INPUTS				OUTPUTS	
SELECT					
C	B	A	$\overline{G}$	Y	W
X	X	X	H	L	H
L	L	L	L	D0	$\overline{D0}$
L	L	H	L	D1	$\overline{D1}$
L	H	L	L	D2	$\overline{D2}$
L	H	H	L	D3	$\overline{D3}$
H	L	L	L	D4	$\overline{D4}$
H	L	H	L	D5	$\overline{D5}$
H	H	L	L	D6	$\overline{D6}$
H	H	H	L	D7	$\overline{D7}$

RECOMMENDED OPERATING CONDITIONS

PARAMETER	MAX or MIN	TTL	LS	S	ALS	AS	F	SN74 HC	CD74 HC	CD74 HCT	CD74 AC	CD74 ACT	UNIT
I_{CC}	MAX	48	10	70	12	30	21	0.08	0.16	0.16	0.16	0.16	mA
I_{OH}	MAX	-0.8	-0.4	-1	-2.6	-15	-1	-6	-4	-4	-24	-24	mA
I_{OL}	MAX	16	8	20	24	48	24	6	4	4	24	24	mA

SWITCHING CHARACTERISTICS

PARAMETER	INPUT	OUTPUT	MAX or MIN	TTL	LS	S	ALS	AS	F	SN74 HC	CD74 HC	CD74 HCT
t_{PLH}	A, B or C	Y	MAX	38	43	18	18	14.5	12	63	56	62
t_{PHL}				38	30	18	24	15	9	63	56	62
t_{PLH}	A, B or C	W (CD74: $\overline{Y}$)	MAX	26	23	15	24	12	9.5	63	62	65
t_{PHL}				30	32	13.5	23	12	7.5	63	62	65
t_{PLH}	D0 to D7	Y	MAX	20	32	16.5	10	10.5	7.5	49	51	57
t_{PHL}				27	26	18	15	11	7.5	49	51	57
t_{PLH}	D0 to D7	W (CD74: $\overline{Y}$)	MAX	14	21	13	15	6.5	7	49	56	54
t_{PHL}				14	20	12	15	4.5	5	49	56	54
t_{PLH}	$\overline{G}$	Y	MAX	33	42	12	18	14	10.5	32	42	44
t_{PHL}				33	32	12	19	11	7.5	32	42	44
t_{PLH}	$\overline{G}$	W (CD74: $\overline{Y}$)	MAX	21	24	7	19	6	7	32	44	54
t_{PHL}				23	30	7	23	10	6	32	44	54

PARAMETER	INPUT	OUTPUT	MAX or MIN	CD74 AC	CD74 ACT
t_{PLH}	A, B or C	Y	MAX	18.2	20.2
t_{PHL}				18.2	20.2
t_{PLH}	A, B or C	W (CD74: $\overline{Y}$)	MAX	19.6	21.6
t_{PHL}				19.6	21.6
t_{PLH}	D0 to D7	Y	MAX	13.5	15.5
t_{PHL}				13.5	15.5
t_{PLH}	D0 to D7	W (CD74: $\overline{Y}$)	MAX	14.9	16.9
t_{PHL}				14.9	16.9
t_{PLH}	$\overline{G}$	Y	MAX	12.2	12.1
t_{PHL}				12.2	12.1
t_{PLH}	$\overline{G}$	W (CD74: $\overline{Y}$)	MAX	13.5	13.5
t_{PHL}				13.5	13.5

UNIT: ns

153

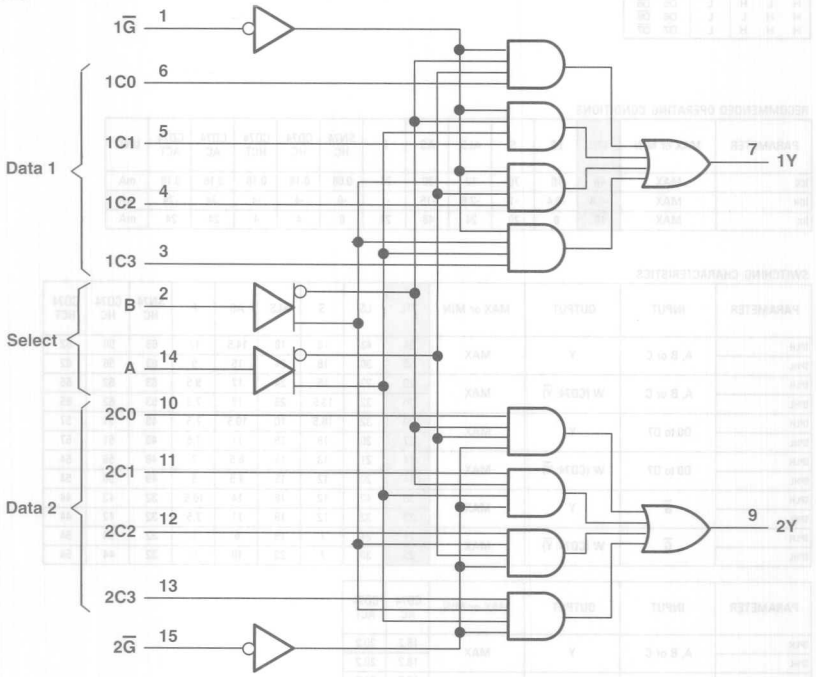

: OBSOLETED or NOT RECOMMENDED NEW DESIGNS

		FUNCTION TABLE					
H	H	X	X	X	L	L	L
H	H	X	X	X	H	L	H

RECOMMENDED OPERATING CONDITIONS

PARAMETER	MAX or MIN	TTL	LS	S	ALS	AS	F	SN74 HC	CD74 HC	CD74 HCT	CD74 AC	CD74 ACT	UNIT
I_{CC}	MAX	60	10	70	14	33	20	0.08	0.16	0.16	0.16	0.16	mA
I_{OH}	MAX	-0.8	-0.4	-1	-2.6	-15	-1	-6	-4	-4	-24	-24	mA
I_{OL}	MAX	16	8	20	24	48	20	6	4	4	24	24	mA

SWITCHING CHARACTERISTICS

PARAMETER	INPUT	OUTPUT	MAX or MIN	TTL	LS	S	ALS	AS	F	SN74 HC	CD74 HC	CD74 HCT	CD74 AC	CD74 ACT
t_{PLH}	DATA	Y	MAX	18	15	9	10	7	8	35	44	51	13.3	18
t_{PHL}			MAX	23	26	9	15	8	7.5	35	44	51	13.3	18
t_{PLH}	SELECT	Y	MAX	34	29	18	21	12.5	12	38	48	51	20	22
t_{PHL}			MAX	34	38	18	21	11	10.5	38	48	51	20	22
t_{PLH}	STROBE	Y	MAX	30	24	15	18	11.5	10.5	24	36	41	11.8	12.6
t_{PHL}			MAX	23	32	13.5	18	9	8	24	36	41	11.8	12.6

UNIT: ns

154

4-LINE TO 16-LINE DECODER/DEMULTIPLEXER

Logic Diagram

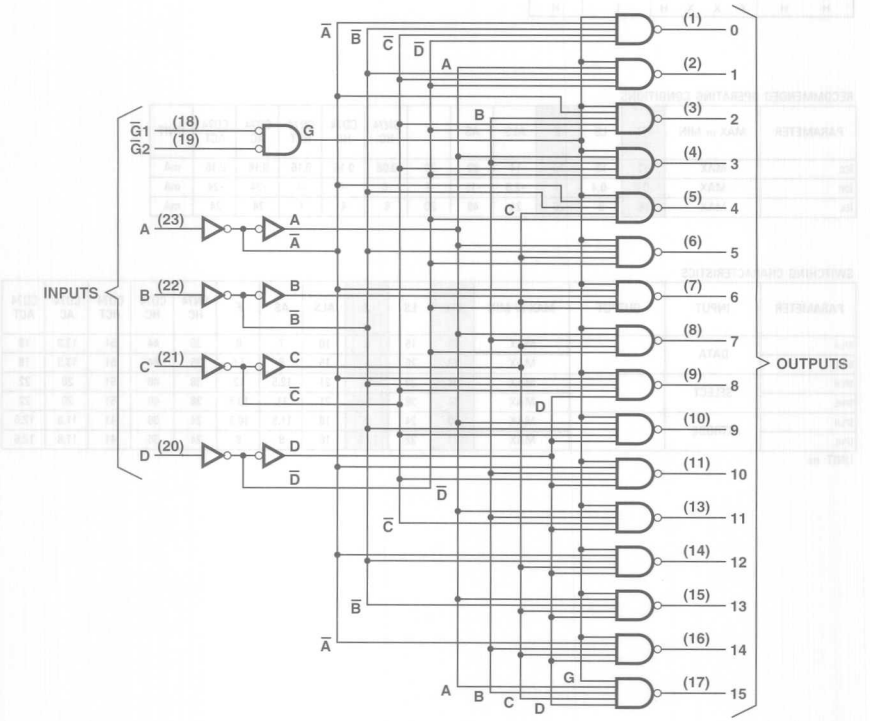

: OBSOLETED or NOT RECOMMENDED NEW DESIGNS

FUNCTION TABLE

INPUTS						OUTPUTS														
$\overline{G1}$	$\overline{G2}$	D	C	B	A	0	1	2	3	4	5	6	7	8	9	10	11	12	13	14	15
L	L	H	L	L	L	L	H	H	H	H	H	H	H	H	H	H	H	H	H	H	H
L	L	L	L	L	H	H	L	H	H	H	H	H	H	H	H	H	H	H	H	H	H
L	L	L	L	H	L	H	H	L	H	H	H	H	H	H	H	H	H	H	H	H	H
L	L	L	L	H	H	H	H	H	L	H	H	H	H	H	H	H	H	H	H	H	H
L	L	L	H	L	L	H	H	H	H	L	H	H	H	H	H	H	H	H	H	H	H
L	L	L	H	L	H	H	H	H	H	H	L	H	H	H	H	H	H	H	H	H	H
L	L	L	H	H	L	H	H	H	H	H	H	L	H	H	H	H	H	H	H	H	H
L	L	L	H	H	H	H	H	H	H	H	H	H	L	H	H	H	H	H	H	H	H
L	L	H	L	L	L	H	H	H	H	H	H	H	H	L	H	H	H	H	H	H	H
L	L	H	L	L	H	H	H	H	H	H	H	H	H	H	L	H	H	H	H	H	H
L	L	H	L	H	L	H	H	H	H	H	H	H	H	H	H	L	H	H	H	H	H
L	L	H	L	H	H	H	H	H	H	H	H	H	H	H	H	H	L	H	H	H	H
L	L	H	H	L	L	H	H	H	H	H	H	H	H	H	H	H	H	L	H	H	H
L	L	H	H	L	H	H	H	H	H	H	H	H	H	H	H	H	H	H	L	H	H
L	L	H	H	H	L	H	H	H	H	H	H	H	H	H	H	H	H	H	H	L	H
L	L	H	H	H	H	H	H	H	H	H	H	H	H	H	H	H	H	H	H	H	L
L	H	X	X	X	X	H	H	H	H	H	H	H	H	H	H	H	H	H	H	H	H
H	L	X	X	X	X	H	H	H	H	H	H	H	H	H	H	H	H	H	H	H	H
H	H	X	X	X	X	H	H	H	H	H	H	H	H	H	H	H	H	H	H	H	H

RECOMMENDED OPERATING CONDITIONS

PARAMETER	MAX or MIN	TTL	ALS	SN74 HC	CD74 HC	CD74 HCT	UNIT
I_{CC}	MAX	56	23	0.08	0.16	0.16	mA
I_{OH}	MAX	-0.8	24	-4	-4	-4	mA
I_{OL}	MAX	16	-0.4	4	4	4	mA

SWITCHING CHARACTERISTICS

PARAMETER	INPUT	OUTPUT	MAX or MIN	TTL	ALS	SN74 HC	CD74 HC	CD74 HCT
t_{PLH}	A, B, C, D	0 to 15 (CD74: Y0 to Y15)	MAX	36	12	45	53	53
t_{PHL}				33	12	45	53	53
t_{PLH}	G1 to G2	0 to 15 (CD74: Y0 to Y15)	MAX	30	12	45	53	51
t_{PHL}				27	12	45	53	51

UNIT: ns

● Outputs: Totem Pole

Logic Diagram

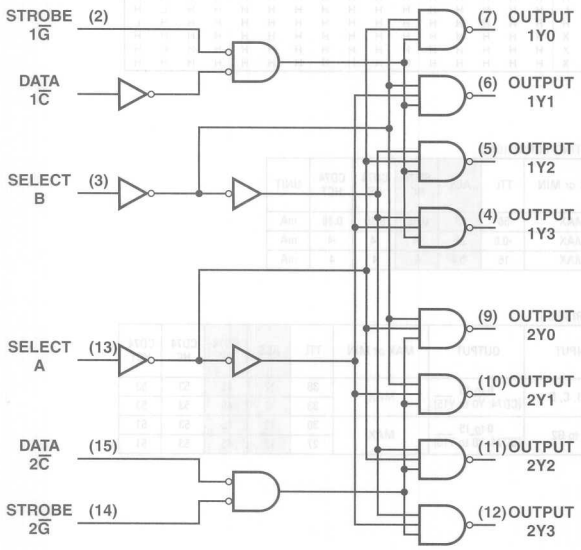

: OBSOLETED or NOT RECOMMENDED NEW DESIGNS

FUNCTION TABLES

2-LINE TO 4-LINE DECODER OR 1-LINE TO 4-LINE DEMULTIPLEXER

INPUTS				OUTPUTS			
SELECT		STROBE	DATA				
B	A	$1\overline{G}$	1C	1Y0	1Y1	1Y2	1Y3
X	X	H	X	H	H	H	H
L	L	L	H	L	H	H	H
L	H	L	H	H	L	H	H
H	L	L	H	H	H	L	H
H	H	L	H	H	H	H	L
X	X	X	L	H	H	H	H

2-LINE TO 4-LINE DECODER OR 1-LINE TO 4-LINE DEMULTIPLEXER

INPUTS				OUTPUTS			
SELECT		STROBE	DATA				
B	A	$2\overline{G}$	2C	2Y0	2Y1	2Y2	2Y3
X	X	H	X	H	H	H	H
L	L	L	L	L	H	H	H
L	H	L	L	H	L	H	H
H	L	L	L	H	H	L	H
H	H	L	L	H	H	H	L
X	X	X	H	H	H	H	H

3-LINE TO 8-LINE DECODER OR 1-LINE TO 8-LINE DEMULTIPLEXER

INPUTS				OUTPUTS							
SELECT			STROBE or DATA	(0)	(1)	(2)	(3)	(4)	(5)	(6)	(7)
C†	B	A	$\overline{G}$‡	2Y0	2Y1	2Y2	2Y3	1Y0	1Y1	1Y2	1Y3
X	X	X	H	H	H	H	H	H	H	H	H
L	L	L	L	L	H	H	H	H	H	H	H
L	L	H	L	H	L	H	H	H	H	H	H
L	H	L	L	H	H	L	H	H	H	H	H
L	H	H	L	H	H	H	L	H	H	H	H
H	L	L	L	H	H	H	H	L	H	H	H
H	L	H	L	H	H	H	H	H	L	H	H
H	H	L	L	H	H	H	H	H	H	L	H
H	H	H	L	H	H	H	H	H	H	H	L

† C = inputs 1C and $2\overline{C}$ connected together
‡ $\overline{G}$ = inputs $1\overline{G}$ and $2\overline{G}$ connected together

RECOMMENDED OPERATING CONDITIONS

PARAMETER	MAX or MIN	TTL	LS	ALS	UNIT
I_{CC}	MAX	40	10	13	mA
I_{OH}	MAX	-0.8	-0.4	-0.4	mA
I_{OL}	MAX	16	8	8	mA

SWITCHING CHARACTERISTICS

PARAMETER	INPUT	OUTPUT	MAX or MIN	TTL	LS	ALS
t_{PLH}	A or B	Y	MAX	32	26	14
t_{PHL}	A or B			32	30	12
t_{PLH}	1C	Y	MAX	24	27	12
t_{PHL}	1C			30	27	14

UNIT: ns

PRODUCTION DATA information is current as of publication date. Products conform to specifications per the terms of Texas Instruments standard warranty. Production processing does not necessarily include testing of all parameters. See www.ti.com/sc/logic for the most current data sheets.

156

DECODERS/DEMULTIPLEXERS

- Individual Strobes Simplify Cascading for Decoding or Demultiplexing Lager Words
- Outputs: Open-Collector

Logic Diagram

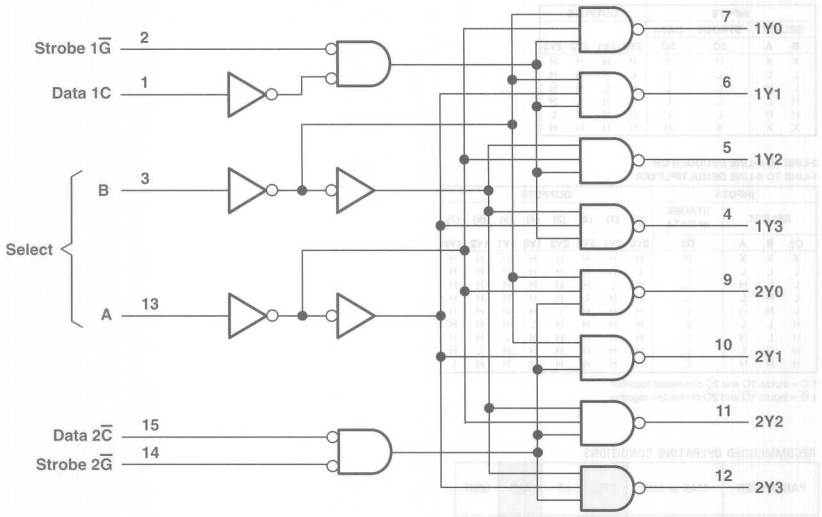

: OBSOLETED or NOT RECOMMENDED NEW DESIGNS

FUNCTION TABLES

2-LINE TO 4-LINE DECODER OR
1-LINE TO 4-LINE DEMULTIPLEXER

INPUTS				OUTPUTS			
SELECT		STROBE	DATA				
B	A	$1\overline{G}$	1C	1Y0	1Y1	1Y2	1Y3
X	X	H	X	H	H	H	H
L	L	L	H	L	H	H	H
L	H	L	H	H	L	H	H
H	L	L	H	H	H	L	H
H	H	L	H	H	H	H	L
X	X	X	L	H	H	H	H

2-LINE TO 4-LINE DECODER OR
1-LINE TO 4-LINE DEMULTIPLEXER

INPUTS				OUTPUTS			
SELECT		STROBE	DATA				
B	A	$2\overline{G}$	2C	2Y0	2Y1	2Y2	2Y3
X	X	H	X	H	H	H	H
L	L	L	L	L	H	H	H
L	H	L	L	H	L	H	H
H	L	L	L	H	H	L	H
H	H	L	L	H	H	H	L
X	X	X	H	H	H	H	H

3-LINE TO 8-LINE DECODER OR
1-LINE TO 8-LINE DEMULTIPLEXER

INPUTS				OUTPUTS							
SELECT			STROBE or DATA	(0)	(1)	(2)	(3)	(4)	(5)	(6)	(7)
C†	B	A	$\overline{G}$‡	2Y0	2Y1	2Y2	2Y3	1Y0	1Y1	1Y2	1Y3
X	X	X	H	H	H	H	H	H	H	H	H
L	L	L	L	L	H	H	H	H	H	H	H
L	L	H	L	H	L	H	H	H	H	H	H
L	H	L	L	H	H	L	H	H	H	H	H
L	H	H	L	H	H	H	L	H	H	H	H
H	L	L	L	H	H	H	H	L	H	H	H
H	L	H	L	H	H	H	H	H	L	H	H
H	H	L	L	H	H	H	H	H	H	L	H
H	H	H	L	H	H	H	H	H	H	H	L

† C = inputs 1C and $2\overline{C}$ connected together
‡ $\overline{G}$ = inputs $1\overline{G}$ and $2\overline{G}$ connected together

RECOMMENDED OPERATING CONDITIONS

PARAMETER	MAX or MIN	TTL	LS	ALS	UNIT
I_{CC}	MAX	40	10	9	mA
I_{OL}	MAX	16	8	8	mA
V_{OH}	MAX	5.5	5.5	5.5	mA

SWITCHING CHARACTERISTICS

PARAMETER	INPUT	OUTPUT	MAX or MIN	TTL	LS	ALS
t_{PLH}	$2\overline{C}$	Y	MAX	23	40	38
t_{PHL}	$1\overline{G}$ or $2\overline{G}$			30	51	22
t_{PLH}	A or B	Y	MAX	34	46	55
t_{PHL}	A or B			34	51	25
t_{PLH}	1C	Y	MAX	27	48	50
t_{PHL}	1C			33	48	23

UNIT: ns

157

Logic Diagram

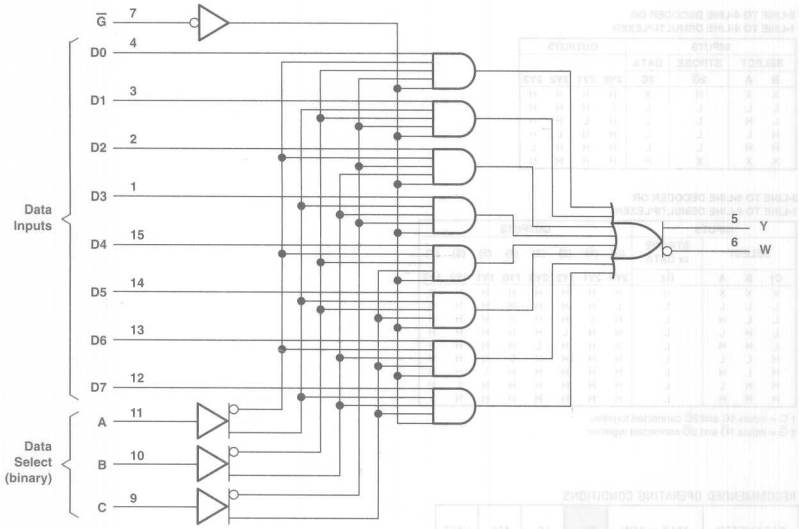

: OBSOLETED or NOT RECOMMENDED NEW DESIGNS

FUNCTION TABLE

INPUTS				OUTPUT
STROBE	SELECT	A	B	
H	X	X	X	L
L	L	L	X	L
L	L	H	X	H
L	H	X	L	L
L	H	X	H	H

RECOMMENDED OPERATING CONDITIONS

PARAMETER	MAX or MIN	TTL	LS	S	ALS	AS	F	SN74 HC	CD74 HC	SN74 HCT	CD74 HCT	UNIT
I_{CC}	MAX	48	16	78	11	28	23	0.08	0.16	0.08	0.16	mA
I_{OH}	MAX	-0.8	-0.4	-1	-0.4	-2	-1	-6	-4	-6	-4	mA
I_{OL}	MAX	16	8	20	8	20	20	6	4	6	4	mA

PARAMETER	MAX or MIN	CD74 AC	CD74 ACT	AHC	AHCT	LV 3V	LV 5V	LVC 3V	UNIT
I_{CC}	MAX	0.16	0.16	0.04	0.02	-	0.0.2	0.01	mA
I_{OH}	MAX	-24	-24	-8	-8	-6	-12	-24	mA
I_{OL}	MAX	24	24	8	8	6	12	24	mA

SWITCHING CHARACTERISTICS

PARAMETER	INPUT	OUTPUT	MAX or MIN	TTL	LS	S	ALS	AS	F	SN74 HC	CD74 HC	SN74 HCT	CD74 HCT
t_{PLH}	DATA	Y	MAX	14	14	7.5	14	6	6.5	32	38	35	38
t_{PHL}				14	14	6.5	12	5.5	7	32	38	35	38
t_{PLH}	STROBE	Y	MAX	20	20	12.5	20	10.5	11	29	41	33	41
t_{PHL}				21	21	12	13	7.5	7	29	41	33	41
t_{PLH}	SELECT	Y	MAX	23	23	15	24	11	11	31	44	40	44
t_{PHL}				27	27	15	17	10	8	31	44	40	44

PARAMETER	INPUT	OUTPUT	MAX or MIN	CD74 AC	CD74 ACT	AHC	AHCT	LV 3V	LV 5V	LVC 3V
t_{PLH}	DATA	Y	MAX	8.5	9.5	9.5	9.8	15	9.5	5.2
t_{PHL}				8.5	9.5	9.5	9.8	15	9.5	5.2
t_{PLH}	STROBE	Y	MAX	13.5	13.5	12	12	19.5	12	6.5
t_{PHL}				13.5	13.5	12	12	19.5	12	6.5
t_{PLH}	SELECT	Y	MAX	14.5	14.5	11.5	12	19	11.5	6.8
t_{PHL}				14.5	14.5	11.5	12	19	11.5	6.8

UNIT: ns

158

QUAD 2-TO-1 LINE DATA SLECTORS/MULTIPLEXERS

- Buffered Inputs and Outputs

Logic Diagram

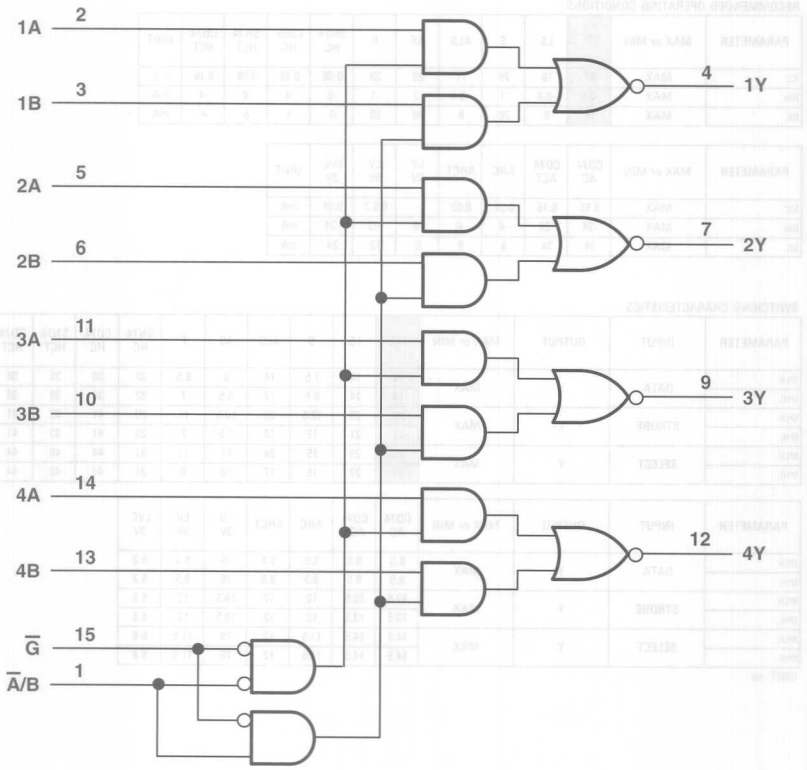

: OBSOLETED or NOT RECOMMENDED NEW DESIGNS

FUNCTION TABLE

INPUTS				OUTPUT
STROBE	SELECT	A	B	
H	X	X	X	H
L	L	L	X	H
L	L	H	X	L
L	H	X	L	H
L	H	X	H	L

RECOMMENDED OPERATING CONDITIONS

PARAMETER	MAX or MIN	LS	S	ALS	AS	F	SN74 HC	CD74 HC	CD74 HCT	UNIT
I_{CC}	MAX	11	81	10	22.5	15	0.08	0.16	0.16	mA
I_{OH}	MAX	-0.4	-1	-0.4	-2	-1	-6	-4	-4	mA
I_{OL}	MAX	8	20	8	20	20	6	4	4	mA

PARAMETER	MAX or MIN	CD74 AC	CD74 ACT	AHC	AHCT	UNIT
I_{CC}	MAX	0.16	0.16	0.04	0.02	mA
I_{OH}	MAX	-24	-24	-8	-8	mA
I_{OL}	MAX	24	24	8	8	mA

SWITCHING CHARACTERISTICS

PARAMETER	INPUT	OUTPUT	MAX or MIN	LS	S	ALS	AS	F	SN74 HC	CD74 HC	CD74 HCT
t_{PLH}	DATA	Y	MAX	12	6	15	5	7	32	42	42
t_{PHL}				15	6	8	4.5	4.5	32	42	42
t_{PLH}	STROBE	Y	MAX	17	11.5	18	6.5	7	29	48	48
t_{PHL}				24	12	18	10	6.5	29	48	48
t_{PLH}	SELECT	Y	MAX	20	12	18	9.5	9.5	31	45	45
t_{PHL}				24	12	18	10.5	7	31	45	45

PARAMETER	INPUT	OUTPUT	MAX or MIN	CD74 AC	CD74 ACT	AHC	AHCT
t_{PLH}	DATA	Y	MAX	8	9.2	9.5	9.8
t_{PHL}				8	9.2	9.5	9.8
t_{PLH}	STROBE	Y	MAX	11.9	12.4	12	12
t_{PHL}				11.9	12.4	12	12
t_{PLH}	SELECT	Y	MAX	12.9	13.5	11.5	12
t_{PHL}				12.9	13.5	11.5	12

UNIT: ns

Logic Diagram

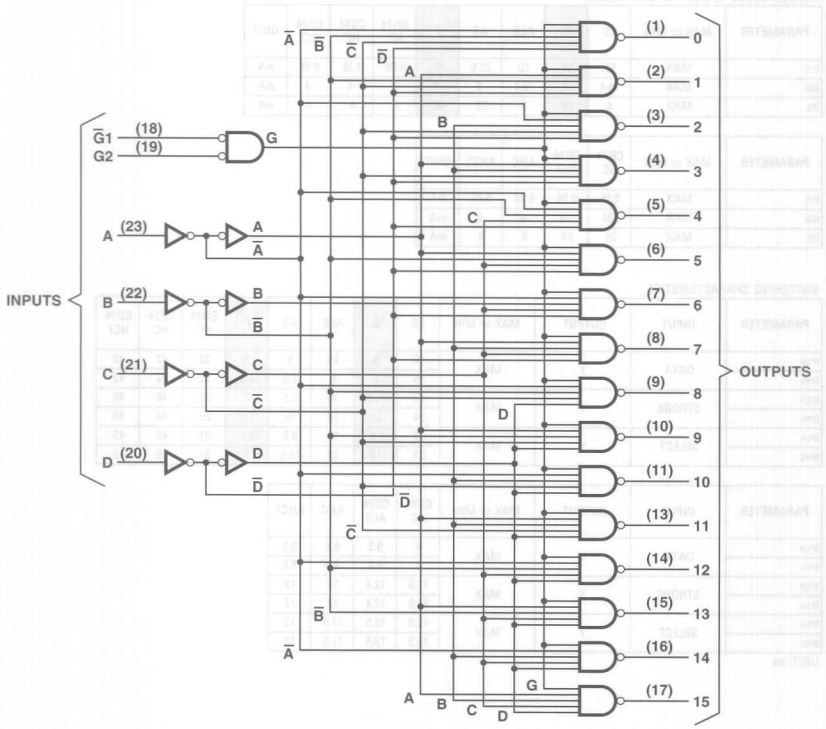

: OBSOLETED or NOT RECOMMENDED NEW DESIGNS

FUNCTION TABLE

INPUTS						OUTPUTS													
$\overline{G1}$	$\overline{G2}$	D	C	B	A	0	1	2	3	4	5	6	7	8	9	10	11	12	13	14	15
L	L	L	L	L	L	L	H	H	H	H	H	H	H	H	H	H	H	H	H	H	H
L	L	L	L	L	H	H	L	H	H	H	H	H	H	H	H	H	H	H	H	H	H
L	L	L	L	H	L	H	H	L	H	H	H	H	H	H	H	H	H	H	H	H	H
L	L	L	L	H	H	H	H	H	L	H	H	H	H	H	H	H	H	H	H	H	H
L	L	L	H	L	L	H	H	H	H	L	H	H	H	H	H	H	H	H	H	H	H
L	L	L	H	L	H	H	H	H	H	H	L	H	H	H	H	H	H	H	H	H	H
L	L	L	H	H	L	H	H	H	H	H	H	L	H	H	H	H	H	H	H	H	H
L	L	L	H	H	H	H	H	H	H	H	H	H	L	H	H	H	H	H	H	H	H
L	L	H	L	L	L	H	H	H	H	H	H	H	H	L	H	H	H	H	H	H	H
L	L	H	L	L	H	H	H	H	H	H	H	H	H	H	L	H	H	H	H	H	H
L	L	H	L	H	L	H	H	H	H	H	H	H	H	H	H	L	H	H	H	H	H
L	L	H	L	H	H	H	H	H	H	H	H	H	H	H	H	H	L	H	H	H	H
L	L	H	H	L	L	H	H	H	H	H	H	H	H	H	H	H	H	L	H	H	H
L	L	H	H	L	H	H	H	H	H	H	H	H	H	H	H	H	H	H	L	H	H
L	L	H	H	H	L	H	H	H	H	H	H	H	H	H	H	H	H	H	H	L	H
L	L	H	H	H	H	H	H	H	H	H	H	H	H	H	H	H	H	H	H	H	L
L	H	X	X	X	X	H	H	H	H	H	H	H	H	H	H	H	H	H	H	H	H
H	L	X	X	X	X	H	H	H	H	H	H	H	H	H	H	H	H	H	H	H	H
H	H	X	X	X	X	H	H	H	H	H	H	H	H	H	H	H	H	H	H	H	H

RECOMMENDED OPERATING CONDITIONS

PARAMETER	MAX or MIN	TTL	UNIT
I_{CC}	MAX	56	mA
I_{OL}	MAX	16	mA

SWITCHING CHARACTERISTICS

PARAMETER	INPUT	OUTPUT	MAX or MIN	TTL
t_{PLH}	INPUT	ANY	MAX	36
t_{PHL}				36
t_{PLH}	STROBE	ANY	MAX	25
t_{PHL}				36

UNIT: ns

161

SYNCHRONOUS 4-BIT BINARY COUNTERS

- Asynchronous Clear Function
- Carry Output for n-Bit Cascading

Logic Diagram

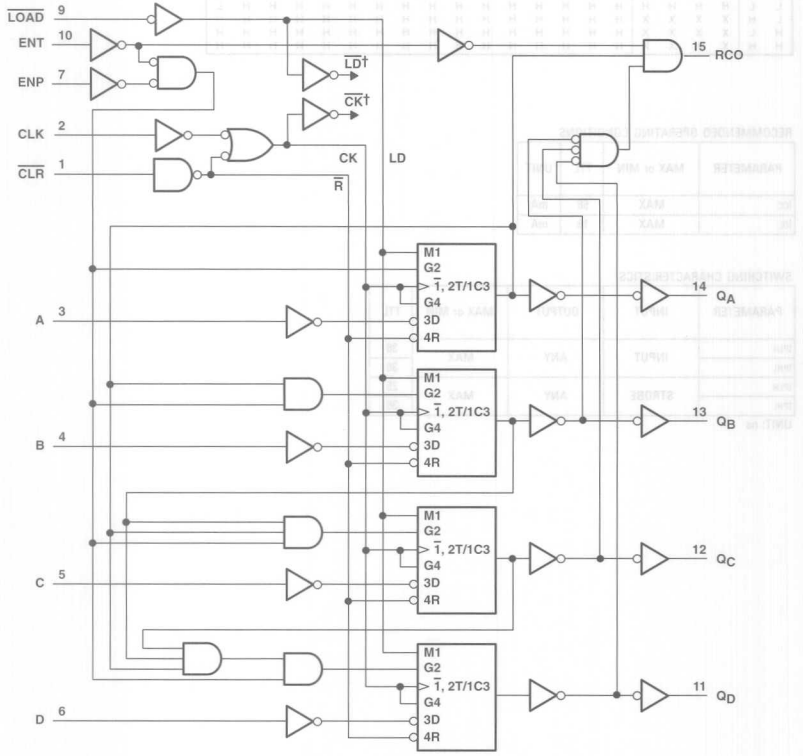

† For simplicity, routing of complementary signals $\overline{LD}$ and $\overline{CK}$ is not shown on this overall logic diagram. The uses of these signals are shown on the logic diagram of the D/T flip-flops.

: OBSOLETED or NOT RECOMMENDED NEW DESIGNS

RECOMMENDED OPERATING CONDITIONS

PARAMETER	MAX or MIN	TTL	LS	ALS	AS	F	SN74 HC	CD74 HC	CD74 HCT	CD74 AC	CD74 ACT	LV 3V	LV 5V	UNIT
I_{CC}	MAX	101	32	21	53	55	0.08	0.16	0.16	0.08	0.08	-	0.02	mA
I_{OH}	MAX	-0.8	-0.4	-0.4	-2	-1	4	-4	-4	-24	-24	-6	-12	mA
I_{OL}	MAX	16	8	8	20	20	-4	4	4	24	24	-6	12	mA

SWITCHING CHARACTERISTICS

PARAMETER		INPUT	OUTPUT	MAX or MIN	TTL	LS	ALS	AS	F	SN74 HC	CD74 HC	CD74 HCT
fmax				MIN	25	25	40	75	90	25	20	20
tw	CLOCK			MIN	25	25	-	-	7	20	24	24
	CLEAR				20	20	15	8	5	20	30	30
tsu	INPUT A, B, C, D			MIN	20	20	15	8	5	38	18	15
	ENABLE, P, T				20	20	15	8	11.5	43	15	20
	LOAD				25	20	15	8	11.5	34	18	18
	CLEAR INACTIVE				20	25	10	8	-	31	20	-
th				MIN	0	3	0	0	2	0	3	5
t_{PLH}		CLOCK	RIPPLE CARRY	MAX	35	35	20	16.5	15	54	56	63
t_{PHL}					35	35	20	12.5	15	54	56	63
t_{PLH}		CLOCK	ANY Q	MAX	25	24	15	7	9.5	51	56	59
t_{PHL}					29	27	20	13	11	51	56	59
t_{PLH}		ENABLE T	RIPPLE CARRY	MAX	16	14	13	9	8.5	49	36	48
t_{PHL}					16	14	13	8.5	8.5	49	36	48
t_{PHL}		CLEAR	ANY Q	MAX	38	28	24	13	13	53	63	75
			RIPPLE CARRY	MAX	-	-	23	12.5	11.5	55	63	75

PARAMETER		INPUT	OUTPUT	MAX or MIN	CD74 AC	CD74 ACT	LV 3V	LV 5V
fmax				MIN	103	91	50	85
tw	CLOCK			MIN	4.8	5.4	5	5
	CLEAR				4.4	5.3	5	5
tsu	INPUT A, B, C, D			MIN	4.4	4.4	6.5	4.5
	ENABLE, P, T				-	-	9	6
	LOAD				5.3	5.3	9.5	6
	CLEAR INACTIVE				-	-	2.5	1.5
th				MIN	0	0	1	1
t_{PLH}		CLOCK	RIPPLE CARRY	MAX	15.2	15.2	23.5	14
t_{PHL}					15.2	15.2	23.5	14
t_{PLH}		CLOCK	ANY Q	MAX	15	15	18.5	11.5
t_{PHL}					15	15	18.5	11.5
t_{PLH}		ENABLE T	RIPPLE CARRY	MAX	9.4	9.8	18	11.5
t_{PHL}					9.4	9.8	18	11.5
t_{PHL}		CLEAR	ANY Q	MAX	15	15	19.5	12.5
			RIPPLE CARRY	MAX	15	15	19	12

UNIT fmax : MHz, other : ns

163

Logic Diagram

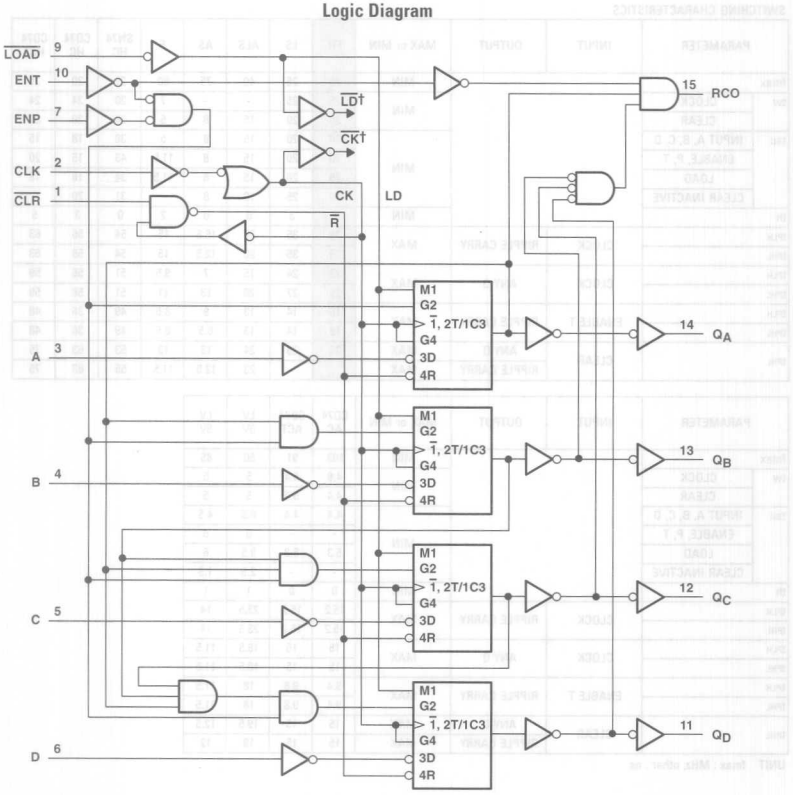

† For simplicity, routing of complementary signals $\overline{LD}$ and $\overline{CK}$ is not shown on this overall logic diagram. The uses of these signals are shown on the logic diagram of the D/T flip-flops.

RECOMMENDED OPERATING CONDITIONS

SWITCHING CHARACTERISTICS

PARAMETER		INPUT	OUTPUT	MAX or MIN	TTL	LS	S	ALS	AS	F	SN74 HC
fmax				MIN	25	25	40	40	75	90	25
tw	CLOCK			MIN	25	25	10	-	-	7	20
	CLEAR				20	20	10	12.5	6.7	-	-
tsu	INPUT A, B, C, D			MIN	20	20	4	15	8	5	38
	ENABLE, P, T				20	20	12	15	8	11.5	43
	$\overline{\text{LOAD}}$				25	20	14	15	8	11.5	34
	$\overline{\text{CLEAR}}$				20	20	14	15	12	-	40
th				MIN	0	3	3	0	0	2	0
t_{PLH}		CLOCK	RIPPLE CARRY	MAX	35	35	25	20	16.5	15	54
t_{PHL}					35	35	25	20	12.5	15	54
t_{PLH}		CLOCK	ANY Q	MAX	25	24	15	15	7	9.5	51
t_{PHL}					29	27	15	20	13	11	51
t_{PLH}		ENABLE T	RIPPLE CARRY	MAX	16	14	15	13	9	8.5	49
t_{PHL}					16	14	15	13	8.5	8.5	49

PARAMETER		INPUT	OUTPUT	MAX or MIN	CD74 HC	CD74 HCT	CD74 AC	CD74 ACT	LV 3V	LV 5V
fmax				MIN	20	20	103	91	50	85
tw	CLOCK			MIN	24	24	4.8	5.4	5	5
	CLEAR				-	-	-	-	-	-
tsu	INPUT A, B, C, D			MIN	18	15	4.4	4.4	6.5	4.5
	ENABLE, P, T				15	20	4.4	5.3	9	6
	$\overline{\text{LOAD}}$				18	18	5.3	6.6	9.5	6
	$\overline{\text{CLEAR}}$				20	20	5.3	6.6	4	3.5
th				MIN	3	5	0	0	1	1
t_{PLH}		CLOCK	RIPPLE CARRY	MAX	56	63	15.2	15.2	23.5	14
t_{PHL}					56	63	15.2	15.2	23.5	14
t_{PLH}		CLOCK	ANY Q	MAX	56	59	15	15	18.5	11.5
t_{PHL}					56	59	15	15	18.5	11.5
t_{PLH}		ENABLE T	RIPPLE CARRY	MAX	36	48	9.4	9.8	18	11.5
t_{PHL}					36	48	9.4	9.8	18	11.5

UNIT fmax : MHz, other : ns

PRODUCTION DATA information is current as of publication date. Products conform to specifications per the terms of Texas Instruments standard warranty. Production processing does not necessarily include testing of all parameters. See www.ti.com/sc/logic for the most current data sheets.

164

8-BIT PARALLEL OUT SERIAL SHIFT REGISTERS

- AND-Gated (Enable/Disable) Serial Inputs
- Fully Buffered Clock and Serial Inputs

Logic Diagram

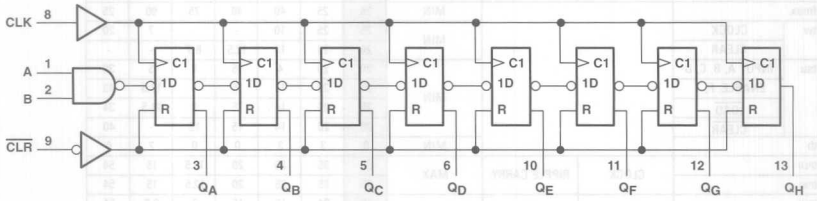

: OBSOLETED or NOT RECOMMENDED NEW DESIGNS

FUNCTION TABLE

INPUTS				OUTPUTS			
$\overline{CLEAR}$	CLOCK	A	B	Q_A	Q_B	...	Q_H
L	X	X	X	L	L		L
H	L	X	X	Q_{A0}	Q_{B0}		Q_{H0}
H	↑	H	H	H	Q_{An}		Q_{Gn}
H	↑	L	X	L	Q_{An}		Q_{Gn}
H	↑	X	L	L	Q_{An}		Q_{Gn}

RECOMMENDED OPERATING CONDITIONS

PARAMETER	MAX or MIN	TTL	LS	ALS	SN74 HC	CD74 HC	CD74 HCT	CD74 AC	CD74 ACT	LV 3V	LV 5V	UNIT
I_{CC}	MAX	54	27	24	0.08	0.16	0.16	0.16	0.16	-	0.02	mA
I_{OH}	MAX	-0.4	-0.4	-0.4	-4	-4	-4	-24	-24	-6	-12	mA
I_{OL}	MAX	8	8	8	4	4	4	24	24	6	12	mA

SWITCHING CHARACTERISTICS

PARAMETER		INPUT	OUTPUT	MAX or MIN	TTL	LS	ALS	SN74 HC	CD74 HC	CD74 HCT	CD74 AC	CD74 ACT
fmax				MIN	25	25	50	25	20	18	75	70
tw	$\overline{CLR}$ "L"			MIN	20	20	16	25	18	27	4.5	4.5
	CLK "H"			MIN	20	20	10	20	24	27	6.7	7.1
	CLK "L"			MIN	20	20	10	20	24	27	6.7	7.1
tsu	DATA			MIN	15	15	6	25	18	18	2.5	2.5
	$\overline{CLEAR}$ INACTIVE			MIN	20	20	8	25	18	18	2.5	2.5
th				MIN	5	5	2	5	4	4	2.5	3
t_{PHL}		$\overline{CLEAR}$	Q	MAX	42	36	20	51	42	57	13.9	15.8
t_{PLH}		CLOCK	Q	MAX	30	27	16	44	51	54	12.5	14.9
t_{PHL}					37	32	17	44	51	54	12.5	14.9

PARAMETER		INPUT	OUTPUT	MAX or MIN	LV 3V	LV 5V
fmax				MIN	45	75
tw	$\overline{CLR}$ "L"			MIN	5	5
	CLK "H"			MIN	5	5
	CLK "L"			MIN	5	5
tsu	DATA			MIN	6	4.5
	$\overline{CLEAR}$ INACTIVE			MIN	2.5	2.5
th				MIN	0	1
t_{PHL}		$\overline{CLEAR}$	Q	MAX	18.5	12.5
t_{PLH}		CLOCK	Q	MAX	18.5	12.5
t_{PHL}					18.5	12.5

UNIT fmax : MHz, other : ns

PRODUCTION DATA information is current as of publication date. Products conform to specifications per the terms of Texas Instruments standard warranty. Production processing does not necessarily include testing of all parameters. See www.ti.com/sc/logic for the most current data sheets.

Logic Diagram

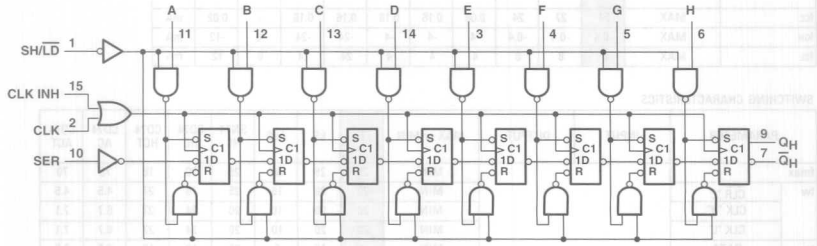

: OBSOLETED or NOT RECOMMENDED NEW DESIGNS

FUNCTION TABLE

INPUTS					INTERNAL OUTPUTS		OUTPUT
SHIFT/ $\overline{LOAD}$	CLOCK INHIBIT	CLOCK	SERIAL	PARALLEL A...H	Q_A	Q_B	Q_H
L	X	X	X	a...h	a	b	h
H	L	↑	X	X	Q_{A0}	Q_{B0}	Q_{H0}
H	L	↑	H	X	H	Q_{An}	Q_{Gn}
H	L	↑	L	X	L	Q_{An}	Q_{Gn}
H	H	X	X	X	Q_{A0}	Q_{B0}	Q_{H0}

RECOMMENDED OPERATING CONDITIONS

PARAMETER	MAX or MIN	TTL	LS	ALS	SN74 HC	CD74 HC	CD74 HCT	LV 3V	LV 5V	UNIT
I_{CC}	MAX	63	30	24	0.08	0.16	0.16	-	0.02	mA
I_{OH}	MAX	-0.8	-0.4	-0.4	-4	-4	-4	-6	-12	mA
I_{OL}	MAX	16	8	8	4	4	4	6	12	mA

SWITCHING CHARACTERISTICS

PARAMETER		INPUT	OUTPUT	MAX or MIN	TTL	LS	ALS	SN74 HC	CD74 HC	CD74 HCT	LV 3V	LV 5V
fmax				MIN	20	25	45	25	20	18	50	85
tw	CLOCK	High		MIN	25	15	11	20	24	27	7	4
		Low		MIN	25	25	11	20	24	27	7	4
	SH/ $\overline{LD}$ "L"	High		MIN	15	25	-	-	-	-	-	-
		Low		MIN	15	17	12	20	24	30	9	6
tsu	CLK INH			MIN	30	30	11	25	24	30	5	3.5
	DATA				10	10	10	25	24	30	8.5	5
	SER				20	20	10	10	24	30	6	4
	SH/ $\overline{LD}$ "H"				45	45	10	20	-	-	6	4
th				MIN	0	0	4	5	11	11	0.5	1
t_{PLH}	CLOCK		Q_H or $\overline{Q}_H$	MAX	24	25	13	38	50	60	21.5	13.5
t_{PHL}					31	25	14	38	50	60	21.5	13.5
t_{PLH}	SH/ $\overline{LD}$		Q_H or $\overline{Q}_H$	MAX	31	35	20	38	53	60	22	13.5
t_{PHL}					40	35	22	38	53	60	22	13.5
t_{PLH}	H		Q_H	MAX	17	25	13	38	45	53	20	12.5
t_{PHL}					36	30	16	38	45	53	20	12.5
t_{PLH}	H		$\overline{Q}_H$	MAX	27	30	15	38	45	53	20	12.5
t_{PHL}					27	25	16	38	45	53	20	12.5

UNIT fmax : MHz, other : ns

PRODUCTION DATA information is current as of publication date. Products conform to specifications per the terms of Texas Instruments standard warranty. Production processing does not necessarily include testing of all parameters. See www.ti.com/sc/logic for the most current data sheets.

166

8-BIT SHIFT REGISTERS

- Synchronous Load
- Direct Overriding Clear
- Parallel-to-Serial Conversion

Logic Diagram

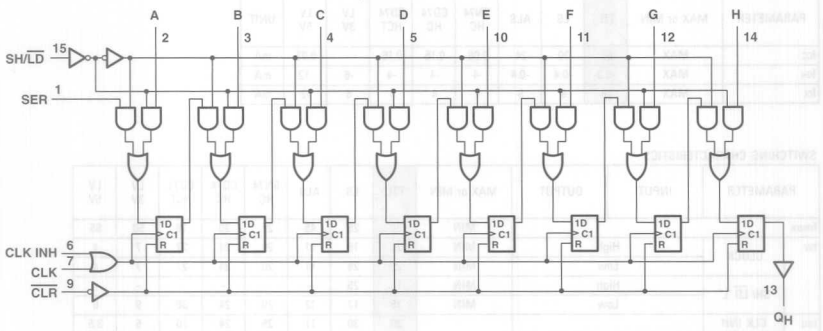

: OBSOLETED or NOT RECOMMENDED NEW DESIGNS

FUNCTION TABLE

INPUTS						INTERNAL OUTPUTS		OUTPUT
$\overline{CLEAR}$	SHIFT/$\overline{LOAD}$	CLOCK INHIBIT	CLOCK	SERIAL	PARALLEL A...H	Q_A	Q_B	Q_H
L	X	X	X	X	X	L	L	L
H	X	L	L	X	X	Q_{A0}	Q_{B0}	Q_{H0}
H	L	L	↑	X	a...h	a	b	h
H	H	L	↑	H	X	H	Q_{An}	Q_{Gn}
H	H	L	↑	L	X	L	Q_{An}	Q_{Gn}
H	X	H	↑	X	X	Q_{A0}	Q_{B0}	Q_{H0}

RECOMMENDED OPERATING CONDITIONS

PARAMETER	MAX or MIN	TTL	LS	ALS	F	SN74 HC	CD74 HC	CD74 HCT	LV 3V	LV 5V	UNIT
I_{CC}	MAX	127	32	24	60	0.08	0.16	0.16	-	0.02	mA
I_{OH}	MAX	-0.8	-0.4	-0.4	-1	-4	-4	-4	-6	-12	mA
I_{OL}	MAX	16	8	8	20	4	4	4	6	12	mA

SWITCHING CHARACTERISTICS

PARAMETER		INPUT	OUTPUT	MAX or MIN	TTL	LS	ALS	F	SN74 HC	CD74 HC	CD74 HCT	LV 3V	LV 5V
fmax				MIN	25	25	45	110	25	20	16	50	85
tw	CLOCK			MIN	20	20	10	3.5	20	24	30	7	4
	$\overline{CLEAR}$				20	25	9	4	25	30	53	7	5
tsu	Mode Control			MIN	30	30	16	4	36	44	45	6	4
	DATA				20	20	7	3	20	24	24	6	4.5
th				MIN	0	0	3	0	0	1	0	0	1
t_{PHL}		$\overline{CLEAR}$	QH	MAX	35	30	14	9.5	30	48	60	18.5	12
t_{PHL}		CLOCK	QH	MAX	30	25	13	14	38	48	60	21.5	13.5
t_{PLH}					26	20	12	9	38	48	60	21.5	13.5

UNIT fmax : MHz, other : ns

Logic Diagram

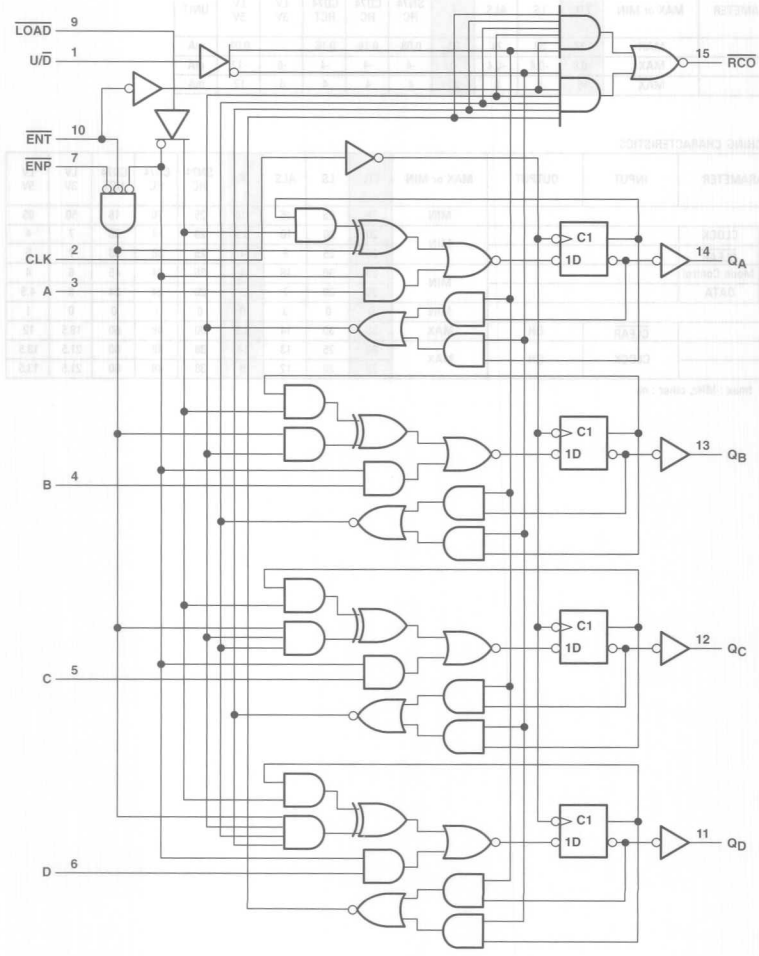

: OBSOLETED or NOT RECOMMENDED NEW DESIGNS

RECOMMENDED OPERATING CONDITIONS

PARAMETER		MAX or MIN	LS	S	ALS	AS	F	UNIT
I_{CC}		MAX	45	160	25	63	52	mA
I_{OH}	$\overline{RCO}$	MAX	-0.4	-1	-0.4	-2	-1	mA
	Q	MAX	-1.2	-1	-0.4	-2	-1	mA
I_{OL}	$\overline{RCO}$	MAX	8	20	8	20	20	mA
	Q	MAX	24	20	8	20	20	mA

SWITCHING CHARACTERISTICS

PARAMETER	INPUT	OUTPUT	MAX or MIN	LS	S	ALS	AS	F
fmax			MIN	20	40	40	75	90
t_{PLH}	CLK	$\overline{RCO}$	MAX	40	21	20	16.5	17
t_{PHL}				25	28	20	13	12.5
t_{PLH}	CLK	ANY Q	MAX	25	15	15	13	9.5
t_{PHL}				25	15	20	7	13
t_{PLH}	$\overline{ENT}$	$\overline{RCO}$	MAX	25	12	13	9	7
t_{PHL}				20	25	16	9	9
t_{PLH}	U/$\overline{D}$	$\overline{RCO}$	MAX	35	15	19	12	12.5
t_{PHL}				25	22	19	13	12

UNIT fmax : MHz, other : ns

170

4-BY-4 REGISTER FILES

- Separate Read/Write Addressing Permits Simultaneous Reading and Writing
- Fast Access Times: Typically 20ns
- Expandable to 1024 Words of 4 Bits

Logic Diagram

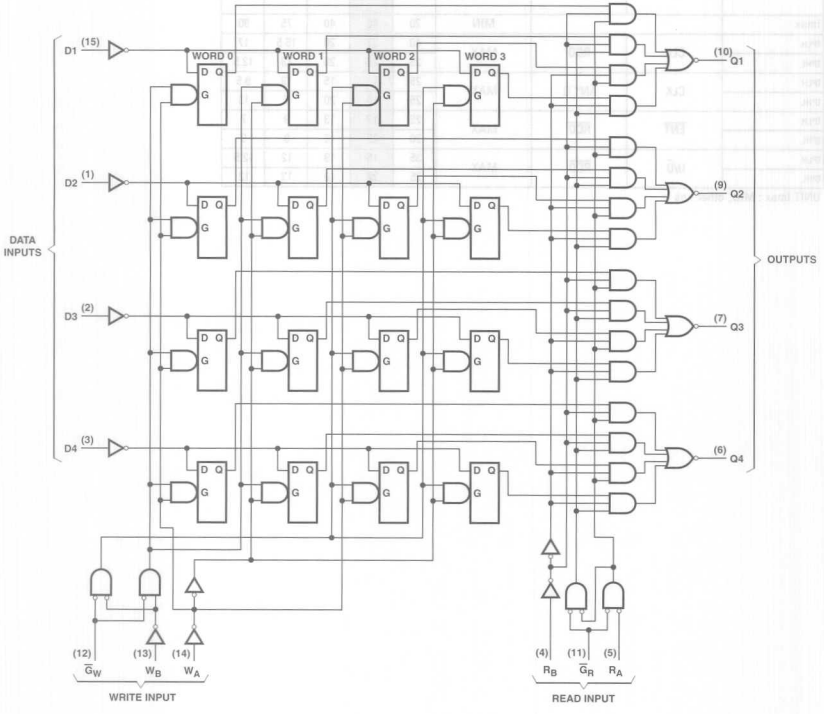

: OBSOLETED or NOT RECOMMENDED NEW DESIGNS

WRITE FUNCTION TABLE

WRITE INPUTS			OUTPUTS			
W_B	W_A	$\overline{G}_W$	0	1	2	3
L	L	L	Q = D	Q_O	Q_O	Q_O
L	H	L	Q_O	Q = D	Q_O	Q_O
H	L	L	Q_O	Q_O	Q = D	Q_O
H	H	L	Q_O	Q_O	Q_O	Q = D
X	X	H	Q_O	Q_O	Q_O	Q_O

READ FUNCTION TABLE

READ INPUTS			OUTPUTS			
R_B	R_A	$\overline{G}_R$	Q1	Q2	Q3	Q4
L	L	L	W0B1	W0B2	W0B3	W0B4
L	H	L	W1B1	W1B2	W1B3	W1B4
H	L	L	W2B1	W2B2	W2B3	W2B4
H	H	L	W3B1	W3B2	W3B3	W3B4
X	X	H	H	H	H	H

RECOMMENDED OPERATING CONDITIONS

PARAMETER	MAX or MIN	TTL	LS	UNIT
I_{CC}	MAX	150	40	mA
V_{OH}	MAX	5.5	5.5	V
I_{OL}	MAX	16	8	mA

SWITCHING CHARACTERISTICS

PARAMETER		INPUT	OUTPUT	MAX or MIN	TTL	LS
fmax				MIN		
tw				MIN	25	25
tsu	D			MIN	10	10
	W				15	15
th	D			MIN	15	15
	W				5	5
t_{PLH}		READ ENABLE	Q	MAX	15	30
t_{PHL}					30	30
t_{PLH}		READ SELECT	Q	MAX	35	40
t_{PHL}					40	40
t_{PLH}		WRITE ENABLE	Q	MAX	40	45
t_{PHL}					45	40
t_{PLH}		DATA	Q	MAX	30	45
t_{PHL}					45	35

UNIT fmax : MHz, other : ns

PRODUCTION DATA information is current as of publication date. Products conform to specifications per the terms of Texas Instruments standard warranty. Production processing does not necessarily include testing of all parameters. See www.ti.com/sc/logic for the most current data sheets.

Logic Diagram

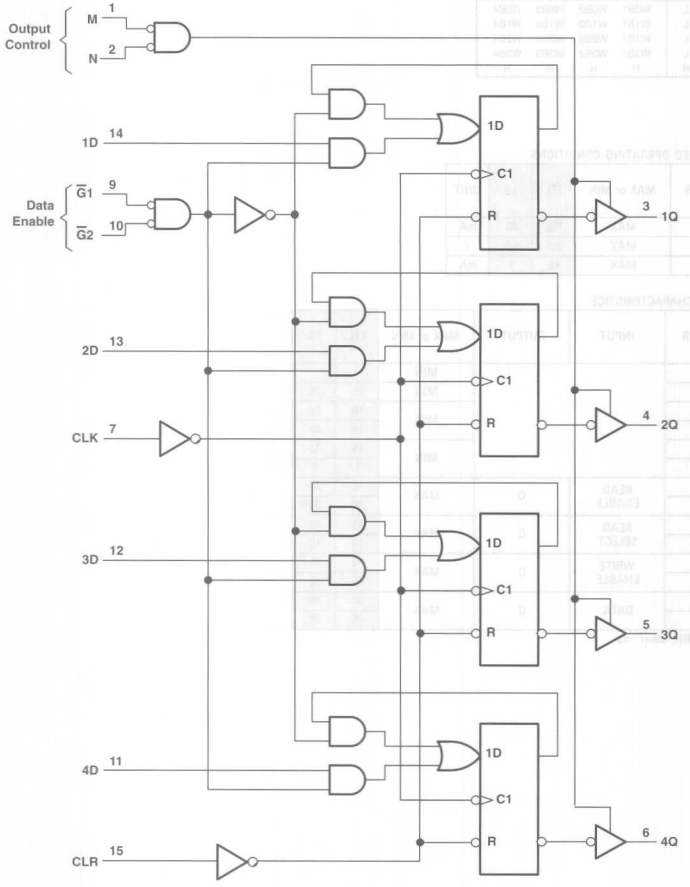

: OBSOLETED or NOT RECOMMENDED NEW DESIGNS

FUNCTION TABLE

INPUTS					OUTPUT
CLEAR	CLOCK	DATA ENABLE $\overline{G1}$	ENABLE $\overline{G2}$	DATA D	Q
H	X	X	X	X	L
L	L	X	X	X	Q_0
L	↑	H	X	X	Q_0
L	↑	X	H	X	Q_0
L	↑	L	L	L	L
L	↑	L	L	H	H

RECOMMENDED OPERATING CONDITIONS

PARAMETER	MAX or MIN	TTL	LS	SN74 HC	CD74 HC	CD74 HCT	UNIT
I_{CC}	MAX	72	24	0.08	0.16	0.16	mA
I_{OH}	MAX	-5.2	-2.6	-6	-6	-6	mA
I_{OL}	MAX	16	24	6	6	6	mA

SWITCHING CHARACTERISTICS

PARAMETER		INPUT	OUTPUT	MAX or MIN	TTL	LS	SN74 HC	CD74 HC	CD74 HCT
fmax				MIN	25	25	25	20	13
tw				MIN	20	25	20	24	28
tsu	DATA ENABLE			MIN	17	35	25	18	18
	DATA				10	17	25	18	27
	CLR INACTIVE			MIN	10	10	23	-	-
th	DATA ENABLE			MIN	2	0	0	0	0
	DATA				10	3	0	3	0
t_{PHL}		CLEAR	Q	MAX	27	35	38	53	66
t_{PLH}		CLOCK	Q	MAX	43	25	38	60	60
t_{PHL}					31	30	38	60	60
t_{PZH}		ENABLE	Q	MAX	30	23	38	45	45
t_{PZL}					30	27	38	45	45
t_{PHZ}		DISABLE	Q	MAX	14	20	38	45	-
t_{PLZ}					20	17	38	45	-

UNIT fmax : MHz, other : ns

174

HEX D-TYPE FLIP-FLOPS

- Buffered Clock and Direct Clear Inputs
- Fully Buffered Outputs for Maximum Isolation from External Disturbances

Logic Diagram

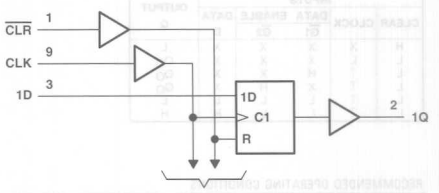

FUNCTION TABLE

INPUTS			OUTPUT
CLEAR	CLOCK	D	Q
L	X	X	L
H	↑	H	H
H	↑	L	L
L	L	X	Q_O

RECOMMENDED OPERATING CONDITIONS

PARAMETER	MAX or MIN	TTL	LS	S	ALS	AS	F	SN74 HC	CD74 HC	CD74 HCT	UNIT
I_{CC}	MAX	65	26	144	19	45	55	0.08	0.16	0.16	mA
I_{OH}	MAX	-0.8	-0.4	-1	-0.4	-2	-1	-4	-4	-4	mA
I_{OL}	MAX	16	8	20	8	20	20	4	4	4	mA

PARAMETER	MAX or MIN	CD74 AC	CD74 ACT	AHC	AHCT	LV 3V	LV 5V	UNIT
I_{CC}	MAX	0.16	0.16	0.04	0.04	-	0.02	mA
I_{OH}	MAX	-24	-24	-8	-8	-6	-12	mA
I_{OL}	MAX	24	24	8	8	6	12	mA

SWITCHING CHARACTERISTICS

PARAMETER		INPUT	OUTPUT	MAX or MIN	TTL	LS	S	ALS	AS	F	SN74 HC	CD74 HC	CD74 HCT	CD74 AC
fmax				MIN	25	30	75	50	100	80	25	20	17	95
tw	$\overline{CLR}$ LOW			MIN	20	20	10	10	5	5	20	24	38	4
	CLK HIGH				20	20	7	10	4	4	20	24	30	5.2
	CLK LOW				20	20	7	10	6	6	20	24	30	5.2
tsu	DATA INPUT			MIN	20	20	5	10	4	4.5	25	18	24	2
	$\overline{CLR}$ INACTIVE			MIN	25	25	5	6	6	5	25	-	-	-
th				MIN	5	5	3	0	1	1	0	5	5	3
t_{PLH}		$\overline{CLR}$	ANY Q	MAX	25	-	-	18	-	-	40	45	66	14.5
t_{PHL}					35	35	22	23	14	15	40	45	66	14.5
t_{PLH}		CLK	ANY Q	MAX	30	30	12	15	8	9	40	50	60	13.5
t_{PHL}					35	30	17	17	10	11	40	50	60	13.5

PARAMETER		INPUT	OUTPUT	MAX or MIN	CD74 ACT	AHC	AHCT	LV 3V	LV 5V
fmax				MIN	80	80	65	50	80
tw	$\overline{CLR}$ LOW			MIN	4	5	5	5	5
	CLK HIGH				6.2	5	5	5	5
	CLK LOW				6.2	5	5	5	5
tsu	DATA INPUT			MIN	2	4.5	5	6	4.5
	$\overline{CLR}$ INACTIVE			MIN	-	2.5	3.5	3	2.5
th				MIN	2.5	0.5	0	0	0.5
t_{PLH}		$\overline{CLR}$	ANY Q	MAX	15.5	-	-	17	11
t_{PHL}					15.5	11	13	17	11
t_{PLH}		CLK	ANY Q	MAX	14	10.5	10	16.5	10.5
t_{PHL}					14	10.5	10	16.5	10.5

UNIT fmax : MHz, other : ns

: OBSOLETED or NOT RECOMMENDED NEW DESIGNS

175

QUAD D-TYPE FLIP-FLOPS

- Complementary Outputs (Q, $\overline{Q}$)
- Buffered Clock and Direct Clear Inputs
- Asynchronous Clear Function

Logic Diagram

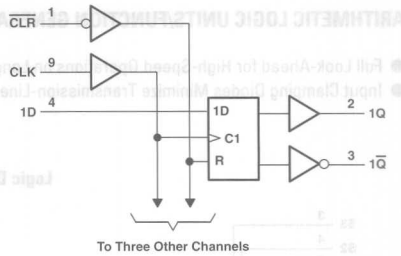

FUNCTION TABLE

INPUTS			OUTPUTS	
CLEAR	CLOCK	D	Q	$\overline{Q}$
L	X	X	L	H
H	↑	H	H	L
H	↑	L	L	H
H	L	X	Q_0	$\overline{Q}_0$

RECOMMENDED OPERATING CONDITIONS

PARAMETER	MAX or MIN	TTL	LS	S	ALS	AS	F	SN74 HC	CD74 HC	CD74 HCT	AC 11	CD74 AC	CD74 ACT	LV 3V	LV 5V	UNIT
I_{CC}	MAX	45	18	96	14	34	34	0.04	0.16	0.16	0.08	0.16	0.16	-	0.02	mA
I_{OH}	MAX	-0.8	-0.4	-1	-0.4	-2	-1	-4	-4	-4	-24	-24	-24	-6	-12	mA
I_{OL}	MAX	16	8	20	8	20	20	4	4	4	24	24	24	6	12	mA

SWITCHING CHARACTERISTICS

PARAMETER		INPUT	OUTPUT	MAX or MIN	TTL	LS	S	ALS	AS	F	SN74 HC	CD74 HC	CD74 HCT
fmax				MIN	25	30	75	50	100	100	25	20	16
tw	$\overline{CLR}$ LOW			MIN	20	20	10	10	5	5	20	24	30
	CLK HIGH				20	20	7	10	4	4	20	24	30
	CLK LOW				20	20	7	10	5	5	20	24	30
tsu	DATA INPUT			MIN	20	20	5	10	3	3	25	24	30
	$\overline{CLR}$ INACTIVE				25	25	5	6	6	5	25	-	-
th				MIN	5	5	3	0	1	1	0	5	5
t_{PLH}		$\overline{CLR}$	ANY Q or $\overline{Q}$	MAX	25	30	15	18	9	9	38	53	53
t_{PHL}					35	30	22	23	13	13	38	53	53
t_{PLH}		CLK	ANY Q or $\overline{Q}$	MAX	30	25	12	15	7.5	7.5	38	53	50
t_{PHL}					35	25	17	17	10	9.5	38	53	50

PARAMETER		INPUT	OUTPUT	MAX or MIN	AC 11	CD74 AC	CD74 ACT	LV 3V	LV 5V
fmax				MIN	125	100	114	45	75
tw	$\overline{CLR}$ LOW			MIN	4	4	4	5	5
	CLK HIGH				4	5	5	5	5
	CLK LOW				4	5	5	5	5
tsu	DATA INPUT			MIN	5.5	2	2	5	4
	$\overline{CLR}$ INACTIVE				5.5	-	-	5	5
th				MIN	0.5	2	2	1	1
t_{PLH}		$\overline{CLR}$	ANY Q or $\overline{Q}$	MAX	6.8	12.2	13	15.5	9.5
t_{PHL}					9.3	12.2	13	15.5	9.5
t_{PLH}		CLK	ANY Q or $\overline{Q}$	MAX	6.9	12.2	11.5	17	10.5
t_{PHL}					9.3	12.2	11.5	17	10.5

UNIT fmax : MHz, other : ns

PRODUCTION DATA information is current as of publication date. Products conform to specifications per the terms of Texas Instruments standard warranty. Production processing does not necessarily include testing of all parameters. See www.ti.com/sc/logic for the most current data sheets.

Logic Diagram

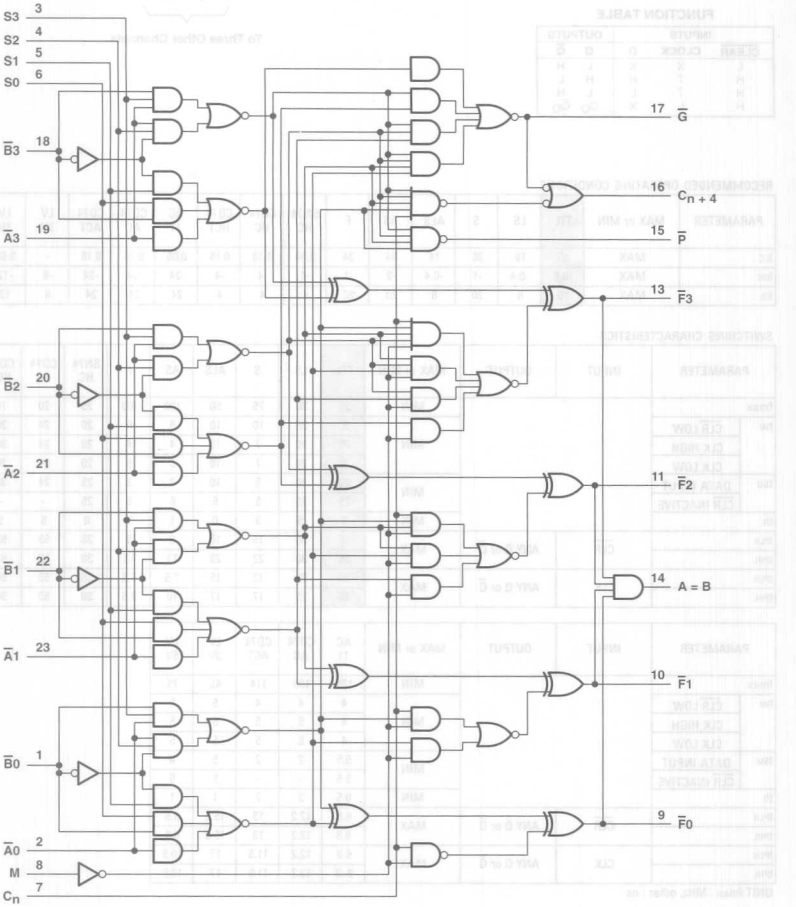

FUNCTION TABLE (ACTIVE LOW)

SELECTION				ACTIVE-LOW DATA		
				M = H	M = L; ARITHMETIC OPERATIONS	
S3	S2	S1	S0	LOGIC FUNCTION	Cn = L (no carry)	Cn = H (with carry)
L	L	L	L	F = $\overline{A}$	F = A MINUS 1	F = A
L	L	L	H	F = $\overline{AB}$	F = AB MINUS 1	F = AB
L	L	H	L	F = $\overline{A}$ + B	F = $A\overline{B}$ MINUS 1	F = $A\overline{B}$
L	L	H	H	F = 1	F = MINUS 1(2's COMP)	F = 0
L	H	L	L	F = $\overline{A}$ + $\overline{B}$	F = A PLUS (A + $\overline{B}$)	F = A PLUS (A + $\overline{B}$) PLUS 1
L	H	L	H	F = $\overline{B}$	F = AB PLUS (A + $\overline{B}$)	F = AB PLUS (A + $\overline{B}$) PLUS 1
L	H	H	L	F = $\overline{A \oplus B}$	F = A MINUS B MINUS 1	F = A MINUS B
L	H	H	H	F = $\overline{A}$ + B	F = A + $\overline{B}$	F = (A + $\overline{B}$) PLUS 1
H	L	L	L	F = $\overline{AB}$	F = A PLUS (A + B)	F = A PLUS (A + B) PLUS 1
H	L	L	H	F = $A \oplus B$	F = A PLUS B	F = A PLUS B PLUS 1
H	L	H	L	F = B	F = $A\overline{B}$ PLUS (A + B)	F = $A\overline{B}$ PLUS (A + B) PLUS 1
H	L	H	H	F = A + B	F = (A + B)	F = (A + B) PLUS 1
H	H	L	L	F = 0	F = A PLUS A*	F = A PLUS A PLUS 1
H	H	L	H	F = $A\overline{B}$	F = AB PLUS A	F = AB PLUS A PLUS 1
H	H	H	L	F = AB	F = $A\overline{B}$ PLUS A	F = $A\overline{B}$ PLUS A PLUS 1
H	H	H	H	F = A	F = A	F = A PLUS 1

FUNCTION TABLE (ACTIVE HIGH)

SELECTION				ACTIVE-HIGH DATA		
				M = H	M = L; ARITHMETIC OPERATIONS	
S3	S2	S1	S0	LOGIC FUNCTION	$\overline{Cn}$ = H (no carry)	$\overline{Cn}$ = L (with carry)
L	L	L	L	F = $\overline{A}$	F = A	F = A PLUS 1
L	L	L	H	F = $\overline{A + B}$	F = A + B	F = (A + B) PLUS 1
L	L	H	L	F = $\overline{AB}$	F = A + $\overline{B}$	F = (A + $\overline{B}$) PLUS 1
L	L	H	H	F = 0	F = MINUS 1(2's COMPL)	F = 0
L	H	L	L	F = $\overline{AB}$	F = A PLUS $A\overline{B}$	F = A PLUS $A\overline{B}$ PLUS 1
L	H	L	H	F = $\overline{B}$	F = (A + B) PLUS $A\overline{B}$	F = (A + B) PLUS $A\overline{B}$ PLUS 1
L	H	H	L	F = $\overline{A \oplus B}$	F = A MINUS B MINUS 1	F = A MINUS B
L	H	H	H	F = $A\overline{B}$	F = $A\overline{B}$ MINUS 1	F = $A\overline{B}$
H	L	L	L	F = $\overline{A}$ + B	F = $\overline{A}$ PLUS AB	F = A PLUS AB PLUS 1
H	L	L	H	F = $\overline{A \oplus B}$	F = A PLUS B	F = A PLUS B PLUS 1
H	L	H	L	F = $\overline{B}$	F = (A + $\overline{B}$) PLUS AB	F = (A + $\overline{B}$) PLUS AB PLUS 1
H	L	H	H	F = AB	F = AB MINUS 1	F = AB
H	H	L	L	F = 1	F = A PLUS A*	F = A PLUS A PLUS 1
H	H	L	H	F = A + $\overline{B}$	F = (A + B) PLUS A	F = (A + B) PLUS A PLUS 1
H	H	H	L	F = A + B	F = (A + $\overline{B}$) PLUS A	F = (A + $\overline{B}$) PLUS A PLUS 1
H	H	H	H	F = A	F = A MINUS 1	F = A

RECOMMENDED OPERATING CONDITIONS

PARAMETER		MAX or MIN	TTL	LS	S	AS	UNIT
I_{CC}		MAX	150	37	220	200	mA
I_{OH}	All outputs except A = B	MAX	-0.8	-0.4	-1	-2	mA
	$\overline{G}$		-	-	-	-3	mA
I_{OL}	All outputs except $\overline{G}$	MAX	16	8	20	20	mA
	$\overline{G}$		16	8	20	48	mA

SWITCHING CHARACTERISTICS

PARAMETER	INPUT	OUTPUT	MAX or MIN	TTL	LS	S	AS
t_{PLH}	C_n	C_n +4	MAX	18	27	10.5	9
t_{PHL}				19	20	10.5	9
t_{PLH}	$\overline{A}$, $\overline{B}$	C_n +4	MAX	43	38	18.5	12
t_{PHL}				41	38	18.5	12
t_{PLH}	C_n	$\overline{F}$	MAX	19	26	12	9
t_{PHL}				18	20	12	9
t_{PLH}	$\overline{A_i}$, $\overline{B_i}$	$\overline{F_i}$	MAX	42	32	16.5	9.5
t_{PHL}				32	20	16.5	8

UNIT: ns

Logic Diagram

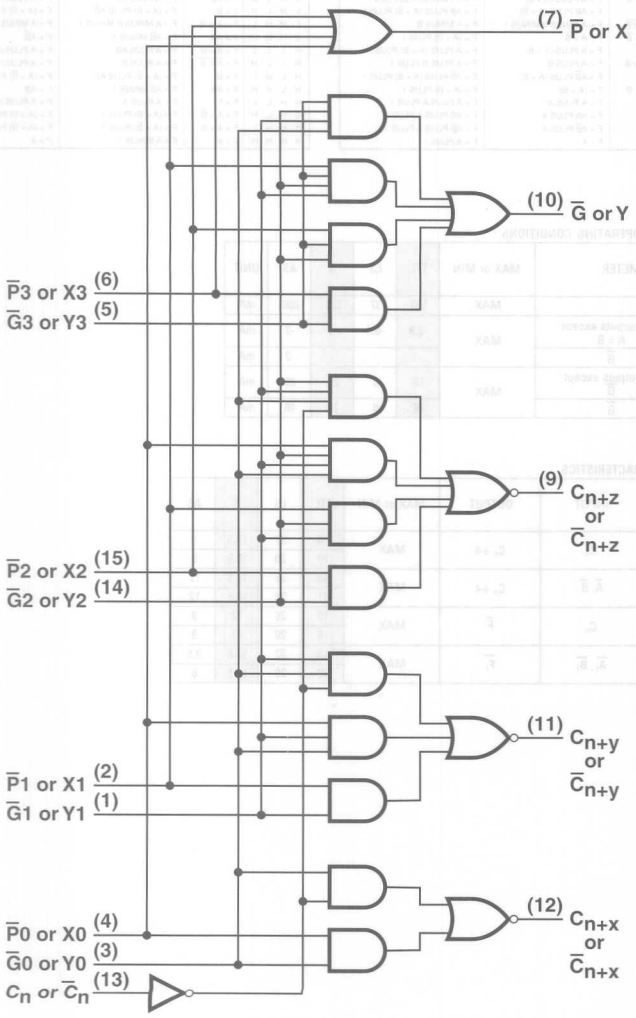

: OBSOLETED or NOT RECOMMENDED NEW DESIGNS

FUNCTION TABLE

$\overline{G}$ OUTPUTS

INPUTS							OUTPUT
$\overline{G}3$	$\overline{G}2$	$\overline{G}1$	$\overline{P}3$	$\overline{P}2$	$\overline{P}1$	$\overline{P}0$	$\overline{G}$
L	X	X	X	X	X	X	L
X	L	X	X	L	X	X	L
X	X	L	X	L	L	X	L
X	X	X	L	L	L	L	L
All other combinations							H

$\overline{P}$ OUTPUTS

INPUTS				OUTPUT
$\overline{P}3$	$\overline{P}2$	$\overline{P}1$	$\overline{P}0$	$\overline{P}$
L	L	L	L	L
All other combinations				H

C_{n+x} OUTPUTS

INPUTS			OUTPUT
$\overline{G}0$	$\overline{P}0$	Cn	C_{n+x}
L	X	X	H
X	L	H	H
All other combinations			L

C_{n+y} OUTPUTS

INPUTS					OUTPUT
$\overline{G}1$	$\overline{G}0$	$\overline{P}1$	$\overline{P}0$	C_n	C_{n+y}
L	X	X	X	X	H
X	L	L	X	X	H
X	X	L	L	H	H
All other combinations					L

C_{n+z} OUTPUTS

INPUTS							OUTPUT
$\overline{G}2$	$\overline{G}1$	$\overline{G}0$	$\overline{P}2$	$\overline{P}1$	$\overline{P}0$	C_n	C_{n+z}
L	X	X	X	X	X	X	H
X	L	X	L	X	X	X	H
X	X	L	L	L	X	X	H
X	X	X	L	L	L	H	H
All other combinations							L

RECOMMENDED OPERATING CONDITIONS

PARAMETER	MAX or MIN	TTL	S	AS	UNIT
I_{CC}	MAX	72	109	36	mA
I_{OH}	MAX	-0.8	-1	-2	mA
I_{OL}	MAX	16	20	20	mA

SWITCHING CHARACTERISTICS

PARAMETER	INPUT	OUTPUT	MAX or MIN	TTL	S	AS
t_{PLH}	Cn	Cn + X, Cn + Y or Cn + Z	MAX	10	10	10
t_{PHL}				10.5	10.5	9.5
t_{PLH}	P or $\overline{G}$	Cn + X, Cn + Y or Cn + Z	MAX	7	7	10.5
t_{PHL}				7	7	6
t_{PLH}	P or $\overline{G}$	$\overline{G}$	MAX	7.5	7.5	12
t_{PHL}				10.5	10.5	8
t_{PLH}	$\overline{P}$	$\overline{P}$	MAX	6.5	6.5	7.5
t_{PHL}				10	10	6

UNIT: ns

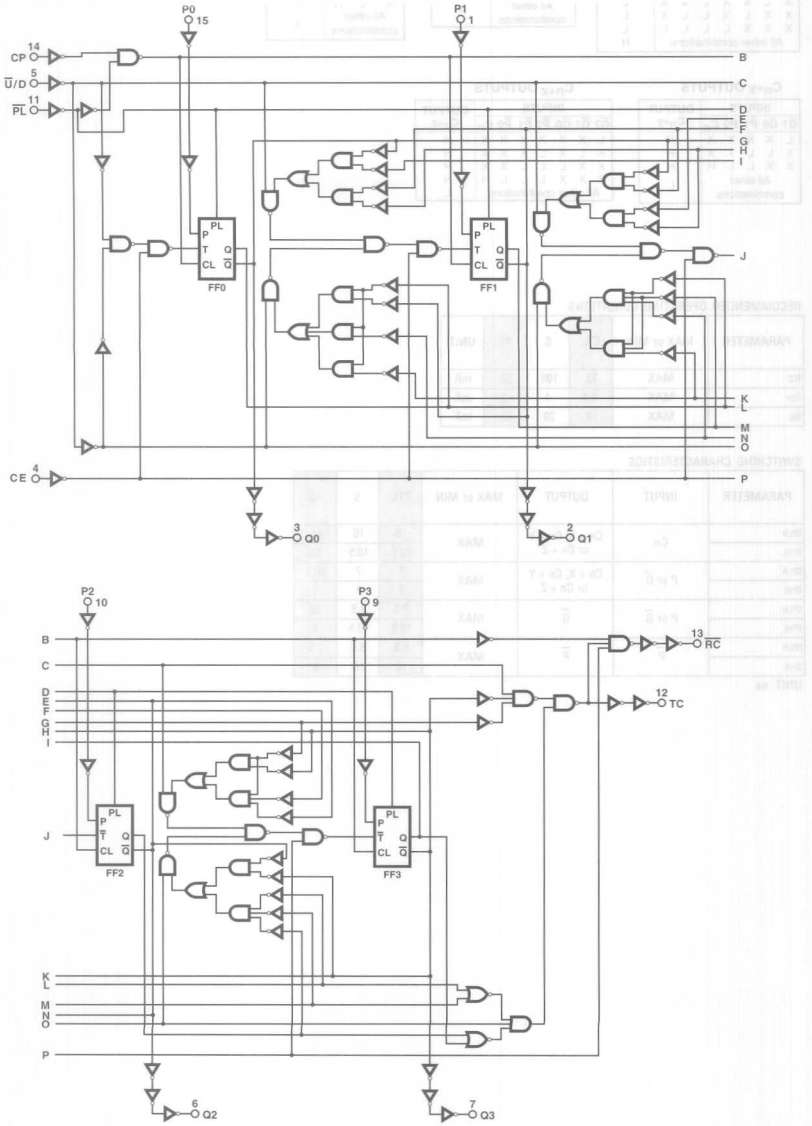

: OBSOLETED or NOT RECOMMENDED NEW DESIGNS

RECOMMENDED OPERATING CONDITIONS

PARAMETER	MAX or MIN	TTL	LS	ALS	SN74 HC	CD74 HC	UNIT
I_{CC}	MAX	105	35	22	0.08	0.16	mA
I_{OH}	MAX	-0.8	-0.4	-0.4	-4	-4	mA
I_{OL}	MAX	16	8	8	4	4	mA

SWITCHING CHARACTERISTICS

PARAMETER	INPUT	OUTPUT	MAX or MIN	TTL	LS	ALS	SN74 HC	CD74 HC
fmax			MIN	20	20	25	17	25
tw	CLK (CP)		MIN	25	25	20	30	20
	$\overline{\text{LOAD}}$ (PL)			35	35	20	30	25
tsu	Data , high or low		MIN	20	20	20	38	15
th	Data hold time		MIN	0	5	5	5	2
t_{PLH}	$\overline{\text{LOAD}}$ (PL)	Q	MAX	33	33	30	66	49
t_{PHL}				50	50	30	66	49
t_{PLH}	DATA	Q	MAX	22	32	21	60	44
t_{PHL}				50	40	21	60	44
t_{PLH}	CLK (CP)	$\overline{\text{RCO}}$ (RC)	MAX	20	20	20	30	31
t_{PHL}				24	24	20	30	31
t_{PLH}	CLK (CP)	Q	MAX	24	24	18	48	43
t_{PHL}				36	36	18	48	43
t_{PLH}	CLK (CP)	MAX/MIN (TC)	MAX	42	42	31	63	53
t_{PHL}				52	52	31	63	53
t_{PLH}	D/$\overline{\text{U}}$ ($\overline{\text{U}}$/D)	$\overline{\text{RCO}}$ (RC)	MAX	45	45	37	57	38
t_{PHL}				45	45	28	57	38
t_{PLH}	D/$\overline{\text{U}}$ ($\overline{\text{U}}$/D)	MAX/ MIN (TC)	MAX	33	33	25	48	41
t_{PHL}				33	33	25	48	41

UNIT fmax : MHz other : ns

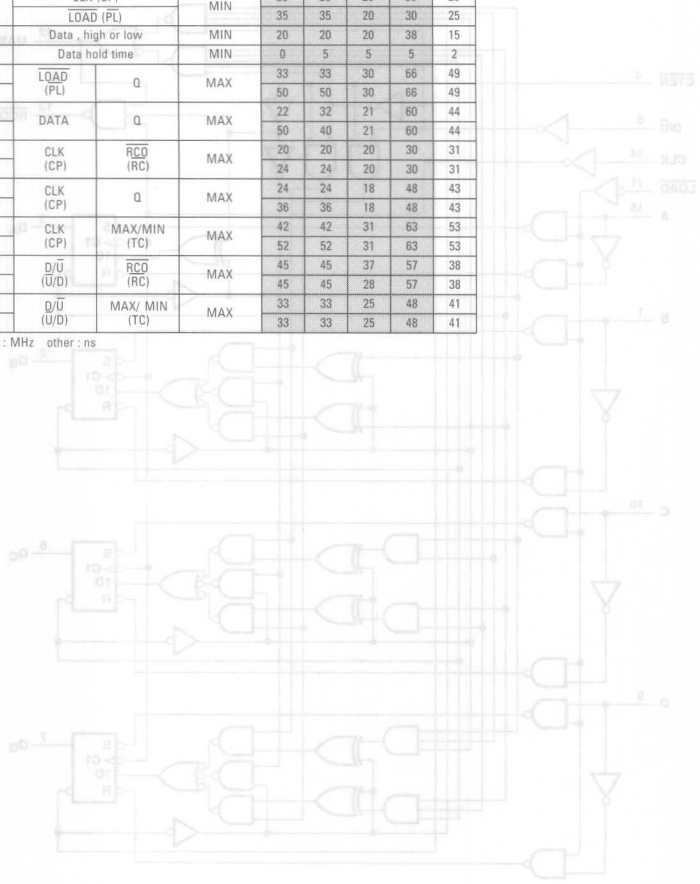

191

SYNCHRONOUS UP/DOWN COUNTERS

- Count Enable Control Input
- Ripple Clock Output for Cascading
- Asynchronously Presentable with Load Control

Logic Diagram

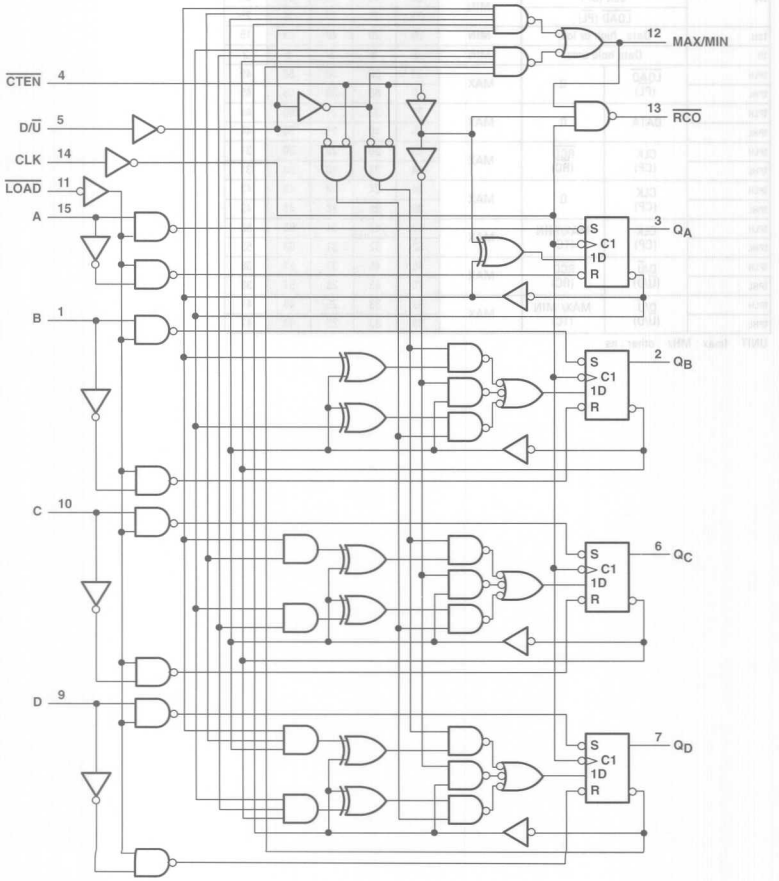

: OBSOLETED or NOT RECOMMENDED NEW DESIGNS

RECOMMENDED OPERATING CONDITIONS

PARAMETER	MAX or MIN	TTL	LS	ALS	SN74 HC	CD74 HC	CD74 HCT	UNIT
I_{CC}	MAX	105	35	22	0.08	0.16	0.16	mA
I_{OH}	MAX	-0.8	-0.4	-0.4	-4	-4	-4	mA
I_{OL}	MAX	16	8	8	4	4	4	mA

SWITCHING CHARACTERISTICS

PARAMETER		INPUT	OUTPUT	MAX or MIN	TTL	LS	ALS	SN74 HC	CD74 HC	CD74 HCT
fmax				MIN	20	20	30	17	25	25
tw	CLK			MIN	25	25	16.5	30	20	20
	LOAD				35	35	20	30	25	25
tsu	DATA			MIN	20	20	20	38	15	15
th	DATA			MIN	0	5	5	5	2	2
t_{PLH}		$\overline{LOAD}$	QA, QB QC, QD	MAX	33	33	30	66	49	50
t_{PHL}					50	50	30	66	49	50
t_{PLH}		DATA A, B, C, D	QA, QB QC, QD	MAX	22	32	21	60	44	48
t_{PHL}					50	40	21	60	44	48
t_{PLH}		CLK	RIPPLE CLK	MAX	20	20	20	30	31	34
t_{PHL}					24	24	20	30	31	34
t_{PLH}		CLK	QA, QB QC, QD	MAX	24	24	18	48	43	44
t_{PHL}					36	36	18	48	43	44
t_{PLH}		CLK	MAX or MIN	MAX	42	42	31	63	53	53
t_{PHL}					52	52	31	63	53	53
t_{PLH}		D/$\overline{U}$	RIPPLE CLK	MAX	45	45	37	57	38	38
t_{PHL}					45	45	28	57	38	38
t_{PLH}		D/$\overline{U}$	MAX or MIN	MAX	33	33	25	48	41	48
t_{PHL}					33	33	25	48	41	48

UNIT fmax : MHz, other : ns

Logic Diagram

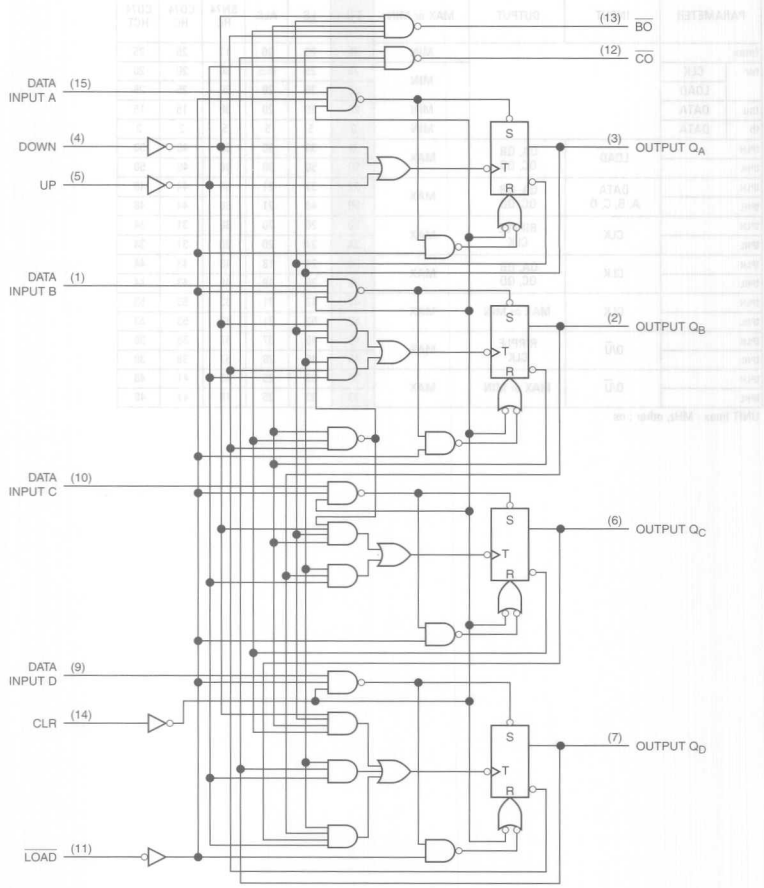

FUNCTION TABLE

CLOCK UP	CLOCK DOWN	RESET	PARALLEL LOAD	FANCTION
↑	H	L	H	Count Up
H	↑	L	H	Count Down
X	X	H	X	Reset
X	X	L	L	Load Preset inputs

NOTE: H = High Voltage Level, L = Low Voltage Level, X = Don't Care, ↑ = Transition from Low to High Level

RECOMMENDED OPERATING CONDITIONS

PARAMETER	MAX or MIN	CD74 HC	UNIT
I_{CC}	MAX	0.16	mA
I_{OH}	MAX	-4	mA
I_{OL}	MAX	4	mA

SWITCHING CHARACTERISTICS

PARAMETER	INPUT	OUTPUT	MAX or MIN	CD74 HC
t_w	CPU, CPD		MIN	35
	$\overline{PL}$			24
	MR			30
t_{su}	Pn to $\overline{PL}$		MIN	24
t_h	Pn to $\overline{PL}$		MIN	0
	CPD to CPU, CPD to CPU			24
t_{PLH}	CPU	$\overline{TCU}$	MAX	38
t_{PHL}				38
t_{PLH}	CPD	$\overline{TCD}$	MAX	38
t_{PHL}				38
t_{PLH}	CPD	Qn	MAX	65
t_{PHL}				65
t_{PLH}	CPD	Qn	MAX	65
t_{PHL}				65
t_{PLH}	$\overline{PL}$	Qn	MAX	66
t_{PHL}				66
t_{PHL}	MR	Qn	MAX	60

UNIT:ns

193

SYNCHRONOUS UP/DOWN DUAL CLOCKCOUNTERS

- Parallel Asynchronous Load for Modulo-N Count Lengths
- Asynchronous Clear

Logic Diagram

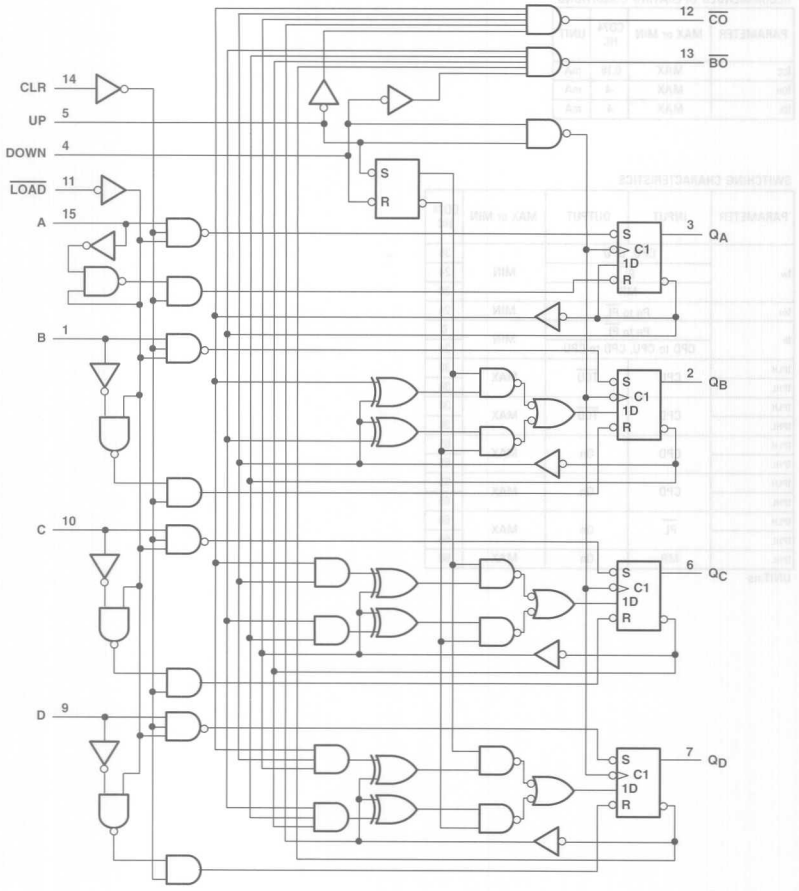

: OBSOLETED or NOT RECOMMENDED NEW DESIGNS

RECOMMENDED OPERATING CONDITIONS

PARAMETER	MAX or MIN	TTL	LS	ALS	F	SN74 HC	CD74 HC	CD74 HCT	UNIT
I_{CC}	MAX	102	34	22	54	0.08	0.16	0.16	mA
I_{OH}	MAX	-0.4	-0.4	-0.4	-1	-4	-4	-4	mA
I_{OL}	MAX	16	8	8	20	4	4	4	mA

SWITCHING CHARACTERISTICS

PARAMETER		INPUT	OUTPUT	MAX or MIN	TTL	LS	ALS	F	SN74 HC	CD74 HC	CD74 HCT
fmax				MIN	25	25	30	85	17	17	15
tw				MIN	20	20	20	4	30	30	35
tsu	DATA			MIN	20	20	20	3.5	28	24	22
th	DATA			MIN	0	5	5	2.5	5	0	0
t_{PLH}		UP	$\overline{CO}$	MAX	26	26	16	9	41	38	41
t_{PHL}					24	24	18	9	41	38	41
t_{PLH}		DOWN	$\overline{BO}$	MAX	24	24	16	9	41	38	41
t_{PHL}					24	24	18	9	41	38	41
t_{PLH}		UP or DOWN	ANY Q	MAX	38	38	19	9	63	65	60
t_{PHL}					47	47	17	13	63	65	60
t_{PLH}		$\overline{LOAD}$	ANY Q	MAX	40	40	30	11	65	66	69
t_{PHL}					40	40	28	13	65	66	69
t_{PHL}		CLR	ANY Q	MAX	35	35	17	12	60	60	65

UNIT fmax : MHz, other : ns

Logic Diagram

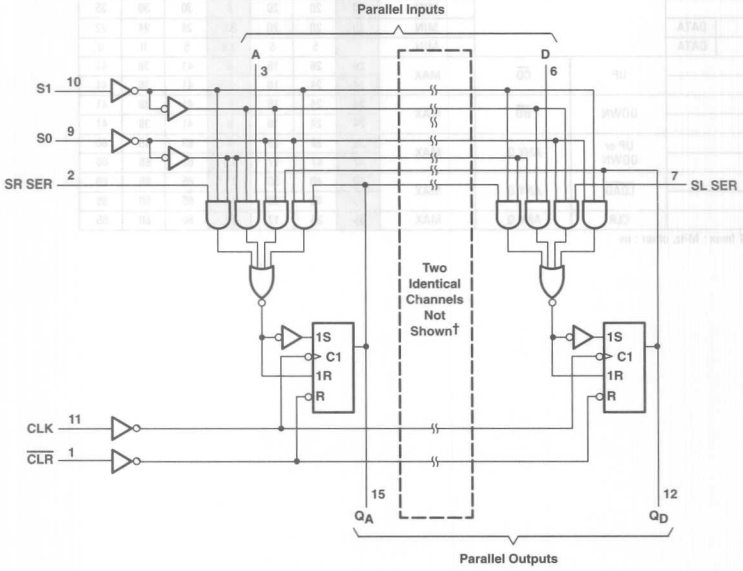

† I/O ports not shown: Q_B (14) and Q_C (13)

FUNCTION TABLE

INPUTS										OUTPUTS			
$\overline{CLEAR}$	MODE		CLOCK	SERIAL		PARALLEL				Q_A	Q_B	Q_C	Q_D
	S1	S0		LEFT	RIGHT	A	B	C	D				
L	X	X	X	X	X	X	X	X	X	L	L	L	L
H	X	X	L	X	X	X	X	X	X	Q_{A0}	Q_{B0}	Q_{C0}	Q_{D0}
H	H	H	↑	X	X	a	b	c	d	a	b	c	d
H	L	H	↑	X	H	X	X	X	X	H	Q_{An}	Q_{Bn}	Q_{Cn}
H	L	H	↑	X	L	X	X	X	X	L	Q_{An}	Q_{Bn}	Q_{Cn}
H	H	L	↑	H	X	X	X	X	X	Q_{Bn}	Q_{Cn}	Q_{Dn}	H
H	H	L	↑	L	X	X	X	X	X	Q_{Bn}	Q_{Cn}	Q_{Dn}	L
H	L	L	X	X	X	X	X	X	X	Q_{A0}	Q_{B0}	Q_{C0}	Q_{D0}

RECOMMENDED OPERATING CONDITIONS

PARAMETER	MAX or MIN	TTL	LS	S	AS	SN74 HC	CD74 HC	CD74 HCT	UNIT
I_{CC}	MAX	63	23	135	53	0.1	0.16	0.16	mA
I_{OH}	MAX	-0.8	-0.4	-1	-2	-4	-4	-4	mA
I_{OL}	MAX	16	8	20	20	4	4	4	mA

SWITCHING CHARACTERISTICS

PARAMETER		INPUT	OUTPUT	MAX or MIN	TTL	LS	S	AS	SN74 HC	CD74 HC	CD74 HCT
fmax				MIN	25	25	70	80	25	20	18
tw	$\overline{CLR}$			MIN	20	20	12	4.5	20	24	24
	CLK "H"				20	20	7	4	20	24	24
	CLK "H"				20	20	7	7	20	24	24
tsu	Mode Control			MIN	30	30	11	9.5	25	24	30
	DATA				20	20	5	4	25	21	21
	CLR INACTIVE				25	25	9	6	-	-	-
th				MIN	0	0	3	0.5	0	0	0
t_{PHL}		$\overline{CLEAR}$	ANY	MAX	30	30	18.5	12	38	42	60
t_{PLH}		CLOCK	ANY	MAX	22	22	12	7	36	53	56
t_{PHL}					26	26	16.5	7	36	53	56

UNIT fmax : MHz, other : ns

195

4-BIT PARALLEL-ACCESS SHIFT REGISTERS

- Direct Overriding Clear
- Parallel-to-Serial, Serial-to-Parallel Conversions

Logic Diagram

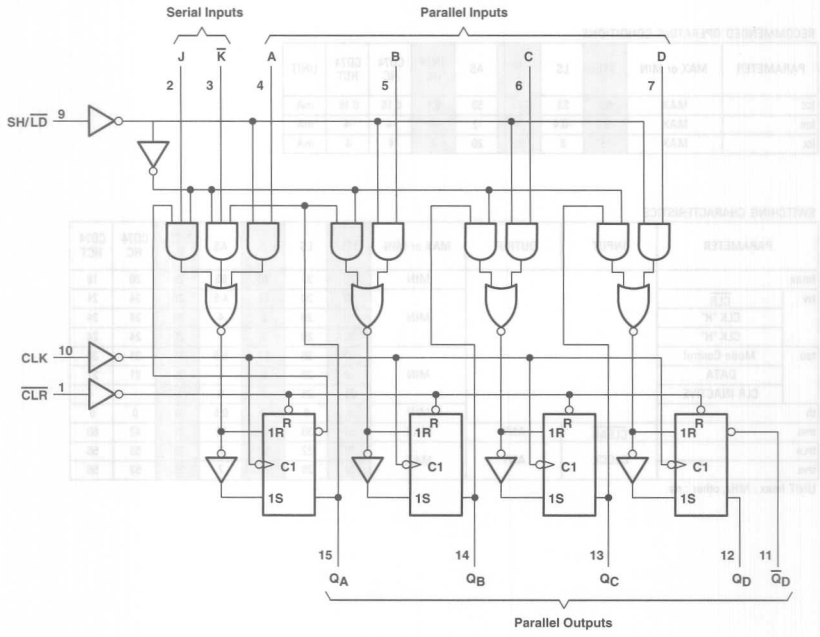

: OBSOLETED or NOT RECOMMENDED NEW DESIGNS

FUNCTION TABLE

INPUTS									OUTPUTS				
$\overline{CLEAR}$	SHIFT/ $\overline{LOAD}$	CLOCK	SERIAL		PARALLEL				Q_A	Q_B	Q_C	Q_D	$\overline{Q}_D$
			J	$\overline{K}$	A	B	C	D					
L	X	X	X	X	X	X	X	X	L	L	L	L	H
H	L	↑	X	X	a	b	c	d	a	b	c	d	$\overline{d}$
H	H	L	X	X	X	X	X	X	Q_{A0}	Q_{B0}	Q_{C0}	Q_{D0}	$\overline{Q}_{D0}$
H	H	↑	L	H	X	X	X	X	Q_{A0}	Q_{A0}	Q_{Bn}	Q_{Cn}	$\overline{Q}_{Cn}$
H	H	↑	L	L	X	X	X	X	L	Q_{An}	Q_{Bn}	Q_{Cn}	$\overline{Q}_{Cn}$
H	H	↑	H	H	X	X	X	X	H	Q_{An}	Q_{Bn}	Q_{Cn}	$\overline{Q}_{Cn}$
H	H	↑	H	L	X	X	X	X	$\overline{Q}_{An}$	Q_{An}	Q_{Bn}	Q_{Cn}	$\overline{Q}_{Cn}$

RECOMMENDED OPERATING CONDITIONS

PARAMETER	MAX or MIN	TTL	LS	S	AS	SN74 HC	CD74 HC	UNIT
I_{CC}	MAX	63	21	109	57	0.1	0.16	mA
I_{OH}	MAX	-0.8	-0.4	-1	-2	-4	-4	mA
I_{OL}	MAX	16	8	20	20	4	4	mA

SWITCHING CHARACTERISTICS

PARAMETER		INPUT	OUTPUT	MAX or MIN	TTL	LS	S	AS	SN74 HC	CD74 HC
fmax				MIN	30	30	70	70	25	20
tw	CLOCK			MIN	16	16	7	4	20	24
	$\overline{CLEAR}$				12	12	12	7.2	20	24
tsu	Shift / Load			MIN	25	25	11	8	25	30
	Serial & Pararel Data				20	15	5	3.5	25	30
	Clear Inactive Data				25	25	9	6	25	30
TRELEASE				MAX	10	20	6	-	-	-
th				MIN	0	0	3	1	0	-
t_{PHL}		$\overline{CLEAR}$	QA, QD	MAX	30	30	18.5	11.5	38	45
t_{PLH}		CLOCK		MAX	22	22	12	8.5	36	53
t_{PHL}					26	26	16.5	10.5	36	53

UNIT fmax : MHz, other : ns

Logic Diagram

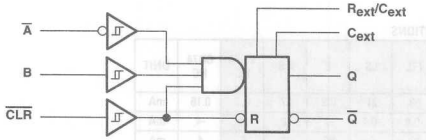

: OBSOLETED or NOT RECOMMENDED NEW DESIGNS

FUNCTION TABLE

INPUTS			OUTPUTS	
$\overline{CLEAR}$	A	B	Q	$\overline{Q}$
L	X	X	L	H
X	H	X	L†	H†
X	X	L	L†	H†
H	L	↑	⎍	⎎
H	↓	H	⎍	⎎
↑	L	H	⎍	⎎

See explanation of function table on page

† These lines of the functional tables assume that the indicated steady-state conditions at the A and B inputs have been set up long enough to complete any pulse started before the set up.

RECOMMENDED OPERATING CONDITIONS

PARAMETER	MAX or MIN	TTL	LS	CD74 HC	CD74 HCT	LV 3V	LV 5V	UNIT
I_{CC}	MAX	80	27	0.16	0.16	0.28	0.65	mA
I_{OH}	MAX	-0.8	-0.4	-4	-4	-6	-12	mA
I_{OL}	MAX	16	8	4	4	6	12	mA

SWITCHING CHARACTERISTICS

PARAMETER	INPUT	OUTPUT	MAX or MIN	TTL	LS	CD74 HC	CD74 HCT	LV 3V	LV 5V
t_{PLH}	A (HC, LV: $\overline{A}$)	Q	MAX	70	70	63	63	27.5	16
	B			55	55	63	63	27.5	16
t_{PHL}	A (HC, LV: $\overline{A}$)	$\overline{Q}$	MAX	80	80	51	51	27.5	16
	B			65	65	51	51	27.5	16
t_{PHL}	Clear	Q	MAX	27	55	48	57	22	13
t_{PLH}		$\overline{Q}$		40	65	54	56	22	13

UNIT: ns

3-TO-8 LINE DECODER DEMULTIPLEXER WITH ADDRESS LATCHES

Logic Diagram

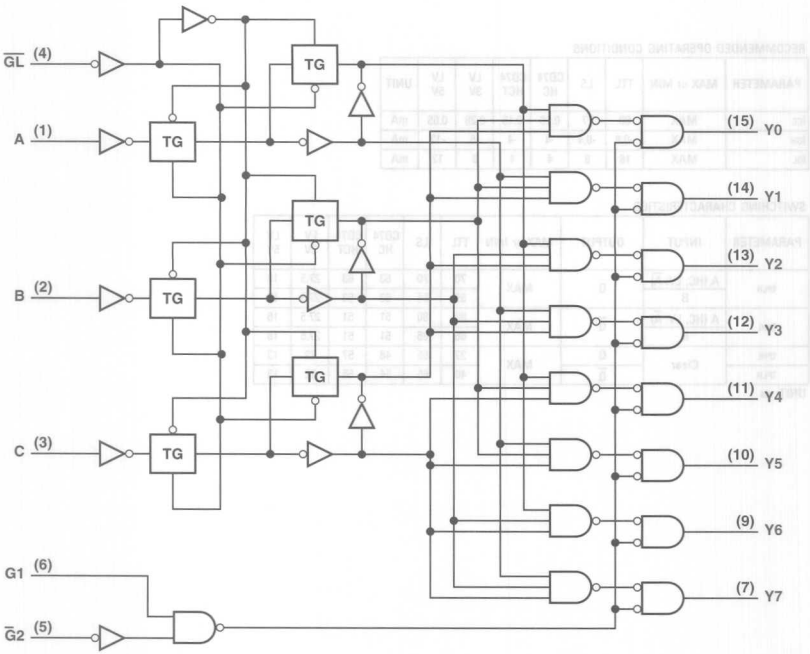

: OBSOLETED or NOT RECOMMENDED NEW DESIGNS

FUNCTION TABLE

INPUTS						OUTPUTS							
LE	OE0	$\overline{OE1}$	A2	A1	A0	Y0	Y1	Y2	Y3	Y4	Y5	Y6	Y7
X	X	H	X	X	X	L	L	L	L	L	L	L	L
X	L	X	X	X	X	L	L	L	L	L	L	L	L
L	H	L	L	L	L	H	L	L	L	L	L	L	L
L	H	L	L	L	H	L	H	L	L	L	L	L	L
L	H	L	L	H	L	L	L	H	L	L	L	L	L
L	H	L	L	H	H	L	L	L	H	L	L	L	L
L	H	L	H	L	L	L	L	L	L	H	L	L	L
L	H	L	H	L	H	L	L	L	L	L	H	L	L
L	H	L	H	H	L	L	L	L	L	L	L	H	L
L	H	L	H	H	H	L	L	L	L	L	L	L	H
H	H	L	X	X	X	Depends upon the address previously applied while LE was at a logic low.							

RECOMMENDED OPERATING CONDITIONS

PARAMETER	MAX or MIN	SN74 HC	CD74 HC	CD74 HCT	UNIT
I_{CC}	MAX	0.08	0.16	0.16	mA
I_{OH}	MAX	-4	-4	-4	mA
I_{OL}	MAX	4	4	4	mA

SWITCHING CHARACTERISTICS

PARAMETER	INPUT	OUTPUT	MAX or MIN	SN74 HC	CD74 HC	CD74 HCT
t_w	LE Pulse Width		MIN	20	15	15
t_{su}	An to LE		MIN	19	15	15
t_h	An to LE		MIN	5	9	5
t_{PLH}	An	Y	MAX	48	48	57
t_{PHL}				48	48	57
t_{PLH}	$\overline{OE}$	Y	MAX	44	44	60
t_{PHL}				44	44	60

UNIT:ns

Logic Diagram

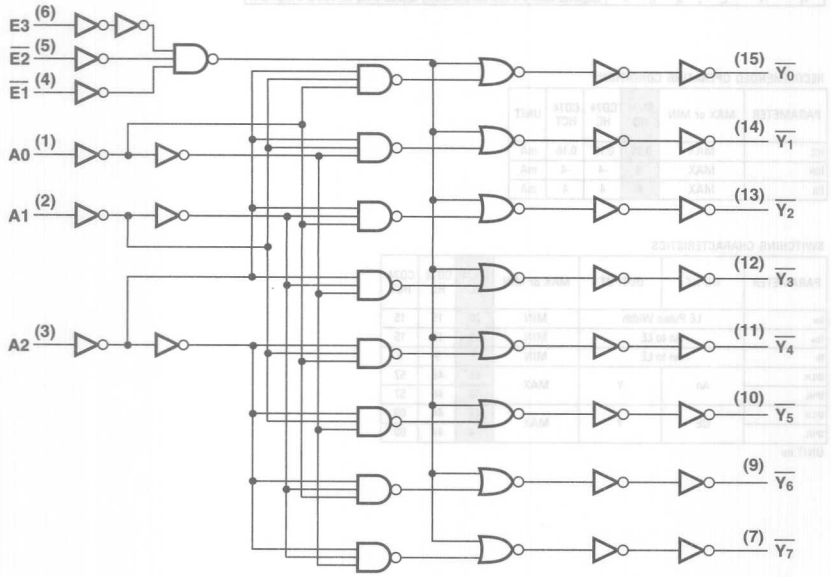

FUNCTION TABLE

INPUTS						OUTPUTS							
ENABLE			ADDRESS										
E3	$\overline{E2}$	$\overline{E1}$	A2	A1	A0	Y0	Y1	Y2	Y3	Y4	Y5	Y6	Y7
X	X	H	X	X	X	L	L	L	L	L	L	L	L
L	X	X	X	X	X	L	L	L	L	L	L	L	L
X	H	X	X	X	X	L	L	L	L	L	L	L	L
H	L	L	L	L	L	H	L	L	L	L	L	L	L
H	L	L	L	L	H	L	H	L	L	L	L	L	L
H	L	L	L	H	L	L	L	H	L	L	L	L	L
H	L	L	L	H	H	L	L	L	H	L	L	L	L
H	L	L	H	L	L	L	L	L	L	H	L	L	L
H	L	L	H	L	H	L	L	L	L	L	H	L	L
H	L	L	H	H	L	L	L	L	L	L	L	H	L
H	L	L	H	H	H	L	L	L	L	L	L	L	H

Note: H = High Voltage Level, L = Low Volltage Level, X = Don't Care

RECOMMENDED OPERATING CONDITIONS

PARAMETER	MAX or MIN	CD74 HC	CD74 HCT	CD74 AC	CD74 ACT	UNIT
I_{CC}	MAX	0.16	0.16	0.16	0.16	mA
I_{OH}	MAX	-4	-4	-24	-24	mA
I_{OL}	MAX	4	4	24	24	mA

SWITCHING CHARACTERISTICS

PARAMETER	INPUT	OUTPUT	MAX or MIN	CD74 HC	CD74 HCT	CD74 AC	CD74 ACT
t_{PLH}	Address	Y	MAX	45	53	15	15
t_{PHL}				45	53	15	15
t_{PLH}	$\overline{E1}$, $\overline{E2}$	Y	MAX	-	-	11.9	11.9
t_{PHL}				-	-	11.9	11.9
t_{PLH}	E3	Y	MAX	-	-	16.6	16.6
t_{PHL}				-	-	16.6	16.6

UNIT:ns

240

OCTAL BUFFERS/LINE DRIVERS/LINE RECEIVERS

- 3-State Outputs Drive Bus Lines or Buffer Memory Address Registers
- PNP Inputs Reduce DC Loading
- 74AC11xxx: Product Available in Reduced-Noise Advanced CMOS (11000 Series)
- 74ACT11xxx: Product Available in Reduced-Noise Advanced CMOS (11000 Series)

Logic Diagram

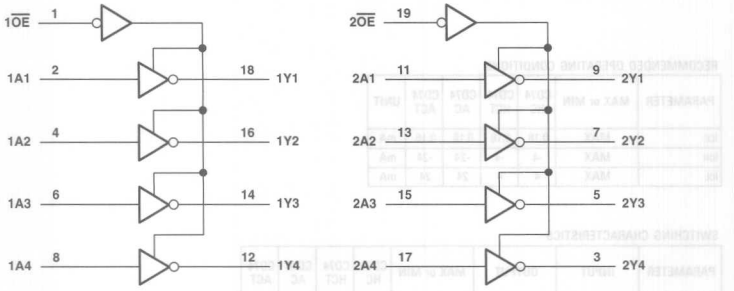

: OBSOLETED or NOT RECOMMENDED NEW DESIGNS

RECOMMENDED OPERATING CONDITIONS

PARAMETER	MAX or MIN	LS	S	ALS	ALS A-1	AS	F	SN74 HC	CD74 HC	SN74 HCT	CD74 HCT	SN74 BCT	ABT	LVT 3V	UNIT
I_{CCH}	MAX	27	135	11	11	17	29	0.08	0.16	0.08	0.16	31	0.25	0.19	mA
I_{CCL}	MAX	44	150	23	23	75	75	0.08	0.16	0.08	0.16	71	30	5	mA
I_{CCZ}	MAX	50	150	25	25	38	63	0.08	0.16	0.08	0.16	9	0.25	0.19	mA
I_{OH}	MAX	-15	-15	-15	-15	-15	-15	-6	-6	-6	-6	-15	-32	-32	mA
I_{OL}	MAX	24	64	24	48	64	64	6	6	6	6	64	64	64	mA

PARAMETER	MAX or MIN	LVTH 3V	AC 11	SN74 AC	CD74 AC	ACT 11	SN74 ACT	CD74 ACT	AHC	AHCT	LV 3V	LV 5V	LVC 3V	LVCZ 3V	UNIT
I_{CCH}	MAX	0.19	0.08	0.04	0.16	0.08	0.04	0.16	0.04	0.04	-	0.02	0.01	0.1	mA
I_{CCL}	MAX	5	0.08	0.04	0.16	0.08	0.04	0.16	0.04	0.04	-	0.02	0.01	0.1	mA
I_{CCZ}	MAX	0.19	0.08	0.04	0.16	0.08	0.04	0.16	0.04	0.04	-	0.02	0.01	0.1	mA
I_{OH}	MAX	-32	-24	-24	-24	-24	-24	-24	-8	-8	-8	-16	-24	-24	mA
I_{OL}	MAX	64	24	24	24	24	24	24	8	8	8	16	24	24	mA

SWITCHING CHARACTERISTICS

PARAMETER	INPUT	OUTPUT	MAX or MIN	LS	S	ALS	ALS A-1	AS	F	SN74 HC	CD74 HC	SN74 HCT	CD74 HCT	SN74 BCT	ABT	LVT 3V
t_{PLH}	A	Y	MAX	14	7	9	9	6.5	8	25	30	32	33	5.6	4.8	3.8
t_{PHL}				18	7	9	9	6.5	5.7	25	30	32	33	4	4.8	4
t_{PZH}	$\overline{G}$	Y	MAX	23	10	13	13	6.4	6.1	38	-	44	-	8.8	5.2	4.6
t_{PZL}				30	15	18	18	9	10	38	-	44	-	10.5	6.2	4.4
t_{PHZ}	$\overline{G}$	Y	MAX	25	9	10	10	5	6.3	38	-	44	-	8.1	6.4	4.4
t_{PLZ}				20	15	12	12	9.5	9.5	38	-	44	-	9.5	5.8	4.3

PARAMETER	INPUT	OUTPUT	MAX or MIN	LVTH 3V	AC 11	SN74 AC	CD74 AC	ACT 11	SN74 ACT	CD74 ACT	AHC	AHCT	LV 3V	LV 5V	LVC 3V	LVCZ 3V
t_{PLH}	A	Y	MAX	3.8	8.4	7	7.2	10.6	9.5	8.6	8.5	9.5	12.5	8.5	6.5	6.5
t_{PHL}				4	7.2	6.5	7.2	8.7	8.5	8.6	8.5	9.5	12.5	8.5	6.5	6.5
t_{PZH}	$\overline{G}$	Y	MAX	4.6	9.2	8	12	12.5	9.5	13.4	10.5	13	16	10.5	8	8
t_{PZL}				4.4	8.7	8.5	12	12.3	10.5	13.4	10.5	13	16	10.5	8	8
t_{PHZ}	$\overline{G}$	Y	MAX	4.4	6.6	9.5	12	10	10.5	13.4	10.5	13	17	15.5	7	7
t_{PLZ}				4.3	7.7	9.5	12	10.8	10.5	13.4	10.5	13	17	15.5	7	7

UNIT: ns

Logic Diagram

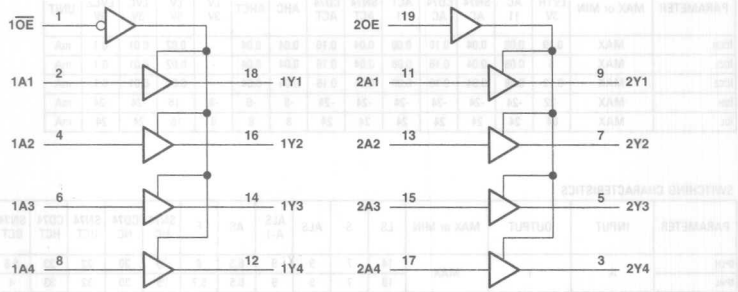

: OBSOLETED or NOT RECOMMENDED NEW DESIGNS

RECOMMENDED OPERATING CONDITIONS

PARAMETER	MAX or MIN	LS	S	ALS	AS	F	SN74 HC	CD74 HC	CD74 HCT	SN74 BCT	ABT	LVTH 3V	SN74 AC	UNIT
I_{CCH}	MAX	27	160	18	35	60	0.08	0.16	0.16	43	0.25	0.19	0.04	mA
I_{CCL}	MAX	46	180	26	90	90	0.08	0.16	0.16	85	30	5	0.04	mA
I_{CCZ}	MAX	54	180	30	56	90	0.08	0.16	0.16	10	0.25	0.19	0.04	mA
I_{OH}	MAX	-15	-15	-15	-15	-15	-6	-6	-6	-15	-32	-32	-24	mA
I_{OL}	MAX	24	64	24	64	64	6	6	6	64	64	64	24	mA

PARAMETER	MAX or MIN	SN74 ACT	CD74 ACT	UNIT
I_{CCH}	MAX	0.04	0.16	mA
I_{CCL}	MAX	0.04	0.16	mA
I_{CCZ}	MAX	0.04	0.16	mA
I_{OH}	MAX	-24	-24	mA
I_{OL}	MAX	24	24	mA

SWITCHING CHARACTERISTICS

PARAMETER	INPUT	OUTPUT	MAX or MIN	LS	S	ALS	AS	F	SN74 HC	CD74 HC	CD74 HCT	SN74 BCT	ABT	LVTH 3V	SN74 AC
t_{PLH}	A	Y	MAX	18	9	11	6.2	6.2	29	33	38	4.9	4.6	3.5	7.5
t_{PHL}				18	9	10	6.2	6.5	29	33	38	5.9	4.6	3.4	7.5
t_{PZH}	$1\overline{G}$	Y	MAX	23	12	21	9	6.7	38	-	-	8.7	6.8	4.5	9.5
t_{PZL}				30	15	21	7.5	8	38	-	-	9.4	6.8	4.4	9.5
t_{PHZ}	$1\overline{G}$	Y	MAX	25	9	10	6	7	38	-	-	8.1	7.1	4.5	10.5
t_{PLZ}				20	15	15	9	7	38	-	-	9.9	5.9	4.7	10.5
t_{PZH}	2G	Y	MAX	23	12	21	10.5	6.7	38	-	-	8.7	6.8	4.5	9.5
t_{PZL}				30	15	21	8.5	8	38	-	-	9.4	6.8	4.4	9.5
t_{PHZ}	2G	Y	MAX	25	9	10	7	7	38	-	-	8.1	7.1	4.5	10.5
t_{PLZ}				20	15	15	12	7	38	-	-	9.9	5.9	4.7	10.5

PARAMETER	INPUT	OUTPUT	MAX or MIN	SN74 ACT	CD74 ACT
t_{PLH}	A	Y	MAX	9.5	9.6
t_{PHL}				8.5	9.6
t_{PZH}	$1\overline{G}$	Y	MAX	9.5	13.4
t_{PZL}				10.5	13.4
t_{PHZ}	$1\overline{G}$	Y	MAX	10.5	13.4
t_{PLZ}				10.5	13.4
t_{PZH}	2G	Y	MAX	9.5	13.4
t_{PZL}				10.5	13.4
t_{PHZ}	2G	Y	MAX	10.5	13.4
t_{PLZ}				10.5	13.4

UNIT: ns

243

QUADRUPLE BUS TRANSCEIVERS

- Two-Way Asynchronous Communication Between Data Buses
- PNP Inputs Reduce DC Loading

Logic Diagram

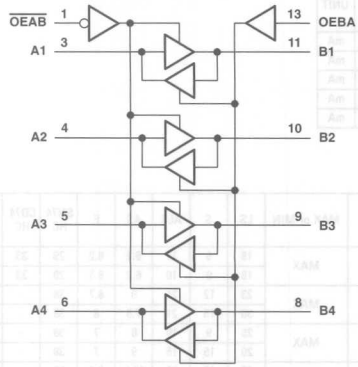

: OBSOLETED or NOT RECOMMENDED NEW DESIGNS

FUNCTION TABLE

INPUTS		OPERATION
$\overline{G}AB$	GBA	
L	L	A to B
H	H	B to A
H	L	Isolation
L	H	Latch A and B (A = B)

RECOMMENDED OPERATING CONDITIONS

PARAMETER	MAX or MIN	LS	ALS	AS	SN74 HC	CD74 HC	CD74 HCT	UNIT
I_{CCH}	MAX	38	25	44	0.08	0.16	0.16	mA
I_{CCL}	MAX	50	30	74	0.08	0.16	0.16	mA
I_{CCZ}	MAX	54	32	56	0.08	0.16	0.16	mA
I_{OH}	MAX	-15	-15	-	-	-6	-6	mA
I_{OL}	MAX	24	24	64	6	6	6	mA

SWITCHING CHARACTERISTICS

PARAMETER	INPUT	OUTPUT	MAX or MIN	LS	ALS	AS	SN74 HC	CD74 HC	CD74 HCT
t_{PLH}	A or B	A or B	MAX	18	11	7.5	25	27	33
t_{PHL}	A or B	A or B	MAX	18	11	6.5	25	27	33
t_{PZH}	$\overline{G}AB$	B	MAX	23	20	9	38	45	51
t_{PZL}				30	20	7.5	38	45	51
t_{PHZ}	$\overline{G}AB$	B	MAX	25	14	6.5	38	45	53
t_{PLZ}				20	22	9	38	45	53
t_{PZH}	GAB	A	MAX	23	20	10.5	38	45	51
t_{PZL}				30	20	8.5	38	45	51
t_{PHZ}	GAB	A	MAX	25	14	7	38	45	53
t_{PLZ}				20	22	11	38	45	53

UNIT: ns

● 74ACT11xxx: Product Available in Reduced-Noise Advanced CMOS (11000 Series)

Logic Diagram

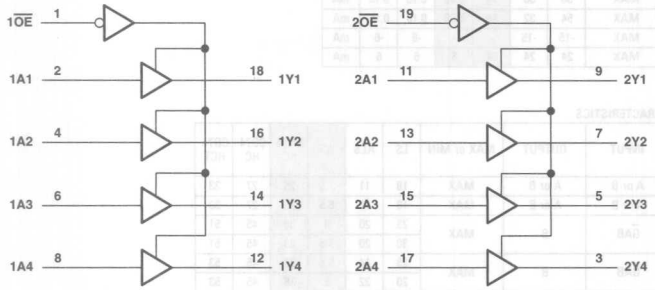

RECOMMENDED OPERATING CONDITIONS

PARAMETER	MAX or MIN	LS	S	ALS	ALS C-1	AS	F	SN74 HC	CD74 HC	SN74 HCT	CD74 HCT	SN74 BCT	SN64 BCT	ABT	LVT 3V	LVTH 3V	LVTT	LVTZ 3V	UNIT
I_{CCH}	MAX	27	160	17	17	34	60	0.08	0.16	0.08	0.16	40	40	0.25	0.19	0.19	0.19	0.225	mA
I_{CCL}	MAX	46	180	24	24	90	90	0.08	0.16	0.08	0.16	80	80	30	5	5	12	15	mA
I_{CCZ}	MAX	54	180	27	27	54	90	0.08	0.16	0.08	0.16	10	10	0.25	0.19	0.19	0.19	0.225	mA
I_{OH}	MAX	-15	-15	-15	-15	-15	-15	-6	-6	-6	-6	-15	-15	-32	-32	-32	-32	-32	mA
I_{OL}	MAX	24	64	24	48	64	64	6	6	6	6	64	64	64	64	64	64	64	mA

PARAMETER	MAX or MIN	AC 11	SN74 AC	CD74 AC	ACT 11	SN74 ACT	CD74 ACT	AHC	AHCT	LV 3V	LV 5V	LVC 3V	LVCH 3V	LVCZ 3V	ALVC 3V	ALVCH 3V	UNIT
I_{CCH}	MAX	0.08	0.04	0.16	0.08	0.04	0.16	0.04	0.04	-	0.02	0.01	0.01	0.1	0.01	0.01	mA
I_{CCL}	MAX	0.08	0.04	0.16	0.08	0.04	0.16	0.04	0.04	-	0.02	0.01	0.01	0.1	0.01	0.01	mA
I_{CCZ}	MAX	0.08	0.04	0.16	0.08	0.04	0.16	0.04	0.04	-	0.02	0.01	0.01	0.1	0.01	0.01	mA
I_{OH}	MAX	-24	-24	-24	-24	-24	-24	-8	-8	-8	-16	-24	-24	-24	-24	-24	mA
I_{OL}	MAX	24	24	24	24	24	24	8	8	8	16	24	24	24	24	24	mA

SWITCHING CHARACTERISTICS

PARAMETER	INPUT	OUTPUT	MAX or MIN	LS	S	ALS	ALS C-1	AS	F	SN74 HC	CD74 HC	SN74 HCT	CD74 HCT	SN74 BCT	SN64 BCT	ABT
t_{PLH}	A	Y	MAX	18	9	10	10	6.2	6.2	29	33	35	38	5	5.3	4.6
t_{PHL}				18	9	10	10	6.2	6.5	29	33	35	38	5.5	6	4.6
t_{PZH}	$\overline{G}$	Y	MAX	23	12	20	20	9	6.7	38	-	44	-	8.7	9	5.1
t_{PZL}				30	15	20	20	7.5	8	38	-	44	-	8.9	9.4	6.1
t_{PHZ}	$\overline{G}$	Y	MAX	25	9	10	10	6	7	38	-	44	-	7.7	8	6.6
t_{PLZ}				20	15	13	13	9	7	38	-	44	-	8.9	9.8	5.7

PARAMETER	INPUT	OUTPUT	MAX or MIN	LVT 3V	LVTH 3V	LVTT	LVTZ 3V	AC 11	SN74 AC	CD74 AC	ACT 11	SN74 ACT	CD74 ACT	AHC	AHCT	LV 3V
t_{PLH}	A	Y	MAX	3.5	3.5	4.1	4.1	7.3	7.5	8.2	9.9	10	9.6	8.5	9.5	13.5
t_{PHL}				3.3	3.3	4.1	4.1	6.9	7.5	8.2	9.2	10	9.6	8.5	9.5	13.5
t_{PZH}	$\overline{G}$	Y	MAX	4.5	4.5	5.2	5.2	8.5	8	12	12.5	9.5	13.4	10.5	13	16
t_{PZL}				4.4	4.4	5.2	5.2	8.5	8.5	12	11.4	10.5	13.4	10.5	13	16
t_{PHZ}	$\overline{G}$	Y	MAX	4.4	4.4	5.6	5.6	7.3	9.5	12	10.4	10.5	13.4	10.5	13	18
t_{PLZ}				4.4	4.4	5.1	5.1	8.2	9.5	12	11.2	10.5	13.4	10.5	13	18

PARAMETER	INPUT	OUTPUT	MAX or MIN	LV 5V	LVC 3V	LVCH 3V	LVCZ 3V	ALVC 3V	ALVCH 3V
t_{PLH}	A	Y	MAX	8.5	5.9	5.9	5.9	2.8	2.8
t_{PHL}				8.5	5.9	5.9	5.9	2.8	2.8
t_{PZH}	$\overline{G}$	Y	MAX	10.5	7.6	7.6	7.6	4.5	4.5
t_{PZL}				10.5	7.6	7.6	7.6	4.5	4.5
t_{PHZ}	$\overline{G}$	Y	MAX	15.5	6.5	5.8	6.5	4.2	4.2
t_{PLZ}				15.5	6.5	5.8	6.5	4.2	4.2

UNIT: ns

245

OCTAL BUS TRANSCEIVERS

- 3-State Outputs Drive Bus Lines Directly
- PNP Inputs Reduce DC Loading on Bus Lines
- 74AC11xxx: Product Available in Reduced-Noise Advanced CMOS (11000 Series)
- 74ACT11xxx: Product Available in Reduced-Noise Advanced CMOS (11000 Series)

Logic Diagram

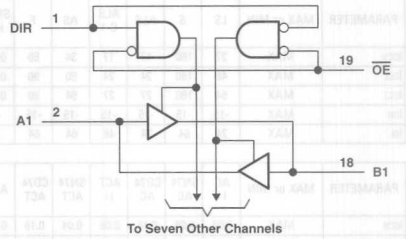

FUNCTION TABLE

ENABLE $\overline{G}$	DIRECTION CONTROL DIR	OPERATION
L	L	B data to A bus
L	H	A data to B bus
H	X	Isolation

RECOMMENDED OPERATING CONDITIONS

PARAMETER	MAX or MIN	LS	ALS	ALS C-1	AS	F	SN74 HC	CD74 HC	SN74 HCT	CD74 HCT	SN74 BCT	SN64 BCT	ABT	ABTH	LVT 3V	LVTH 3V	LVTR 3V	UNIT
I_{CCH}	MAX	70	45	45	97	90	0.08	0.16	0.08	0.16	57	57	0.25	0.25	0.19	0.19	0.19	mA
I_{CCL}	MAX	90	55	55	143	120	0.08	0.16	0.08	0.16	90	90	30	30	5	5	12	mA
I_{CCZ}	MAX	95	58	58	123	110	0.08	0.16	0.08	0.16	15	15	0.25	0.25	0.19	0.19	0.19	mA
I_{OH} (A port)	MAX	-15	-15	-15	-15	-3	-6	-4	-6	-4	-3	-3	-32	-32	-32	-32	-12	mA
I_{OH} (B port)	MAX	-15	-15	-15	-15	-15	6	-4	-6	-4	-15	-15	-32	-32	-32	-32	-32	mA
I_{OL} (A port)	MAX	24	24	48	64	24	-6	4	6	4	24	24	64	64	64	64	32	mA
I_{OL} (B port)	MAX	24	24	48	64	64	6	4	6	4	64	64	64	64	64	64	32	mA

PARAMETER	MAX or MIN	AC 11	SN74 AC	CD74 AC	ACT 11	SN74 ACT	CD74 ACT	AHC	AHCT	LV 3V	LV 5V	LVC 3V	LVCH 3V	LVCZ 3V	ALVC 3V	ALVCH 3V	UNIT
I_{CCH}	MAX	0.08	0.04	0.16	0.08	0.04	0.16	0.04	0.04	-	0.02	0.01	0.01	0.1	0.01	0.01	mA
I_{CCL}	MAX	0.08	0.04	0.16	0.08	0.04	0.16	0.04	0.04	-	0.02	0.01	0.01	0.1	0.01	0.01	mA
I_{CCZ}	MAX	0.08	0.04	0.16	0.08	0.04	0.16	0.04	0.04	-	0.02	0.01	0.01	0.1	0.01	0.01	mA
I_{OH} (A port)	MAX	-24	-24	-24	-24	-24	-24	-8	-8	-8	-16	-24	-24	-24	-24	-24	mA
I_{OH} (B port)	MAX	-24	-24	-24	-24	-24	-24	-8	-8	-8	-16	-24	-24	-24	-24	-24	mA
I_{OL} (A port)	MAX	24	24	24	24	24	24	8	8	8	16	24	24	24	24	24	mA
I_{OL} (B port)	MAX	24	24	24	24	24	24	8	8	8	16	24	24	24	24	24	mA

: OBSOLETED or NOT RECOMMENDED NEW DESIGNS

SWITCHING CHARACTERISTICS

PARAMETER	INPUT	OUTPUT	MAX or MIN	LS	ALS	ALS C-1	AS	F	SN74 HC	CD74 HC	SN74 HCT	CD74 HCT	SN74 BCT	SN64 BCT	ABT	ABTH
t_{PLH}	A, B	B, A	MAX	12	10	10	7.5	7	26	33	28	39	7	7	3.6	3.6
t_{PHL}				12	10	10	7	7	26	33	28	39	7	7	3.9	3.9
t_{PZH}	$\overline{G}$	A, B	MAX	40	20	20	9	8	58	45	58	48	10.9	10.9	5.6	5.6
t_{PZL}				40	20	20	8.5	9	58	45	58	48	11.6	11.6	6.2	6.2
t_{PHZ}	$\overline{G}$	A, B	MAX	28	10	10	5.5	7.5	50	45	50	45	9.3	9.3	5.9	5.9
t_{PLZ}				25	15	15	9.5	7.5	50	45	50	45	9.1	9.1	4.5	4.5

PARAMETER	INPUT	OUTPUT	MAX or MIN	LVT 3V	LVTH 3V	AC 11	SN74 AC	CD74 AC	ACT 11	SN74 ACT	CD74 ACT	AHC	AHCT	LV 3V	LV 5V	LVC 3V
t_{PLH}	A, B	B, A	MAX	3.5	3.5	9.5	7	8.5	10	8	10	8.5	9.5	13.5	8.5	6.3
t_{PHL}				3.5	3.5	6.9	7	8.5	9.1	9	10	8.5	9.5	13.5	8.5	6.3
t_{PZH}	$\overline{G}$	A, B	MAX	5.5	5.5	11.4	9	14	13.2	11	14	12	16	19	12	8.5
t_{PZL}				5.5	5.5	9.5	9.5	14	12.9	12	14	12	16	19	12	8.5
t_{PHZ}	$\overline{G}$	A, B	MAX	5.9	5.9	9.5	10	14	12.9	11	14.4	11	16.5	22	16	7.5
t_{PLZ}				5	5	10.4	10	14	13.9	11	14.4	11	16.5	22	16	7.5

PARAMETER	INPUT	OUTPUT	MAX or MIN	LVCH 3V	LVCZ 3V	ALVC 3V	ALVCH 3V
t_{PLH}	A, B	B, A	MAX	6.3	6.3	3.4	3.4
t_{PHL}				6.3	6.3	3.4	3.4
t_{PZH}	$\overline{G}$	A, B	MAX	8.5	8.5	5.5	5.5
t_{PZL}				8.5	8.5	5.5	5.5
t_{PHZ}	$\overline{G}$	A, B	MAX	7.5	7.5	5.5	5.5
t_{PLZ}				7.5	7.5	5.5	5.5

PARAMETER	INPUT	OUTPUT	MAX or MIN	LVTR 3V
t_{PLH}	A	B	MAX	4.2
	B	A		4.4
t_{PHL}	A	B	MAX	4.6
	B	A		4.1
t_{PZH}	$\overline{G}$	B	MAX	5.5
		A		6
t_{PZL}	$\overline{G}$	B	MAX	6.6
		A		6.4
t_{PHZ}	$\overline{G}$	B	MAX	6.1
		A		5.8
t_{PLZ}	$\overline{G}$	B	MAX	5.2
		A		5.2

UNIT: ns

BCD-TO-SEVEN-SEGMENT DECODERS/DRIVERS WITH RIPPLE-BLANKING

Logic Diagram

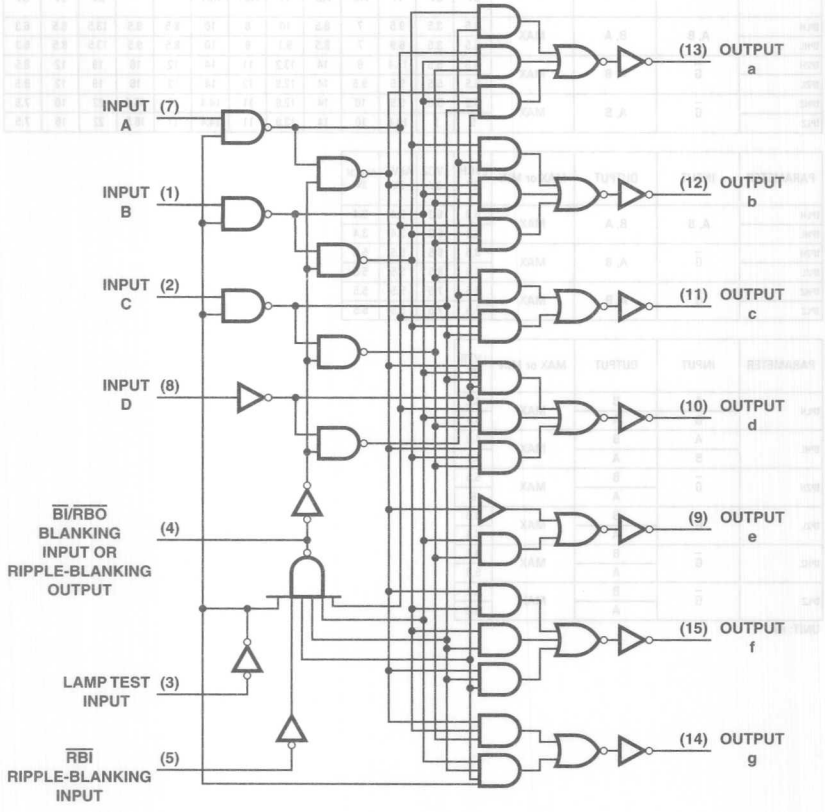

FUNCTION TABLE

DECIMAL OR FUNCTION	INPUTS						BI/$\overline{RBO}$	OUTPUTS						
	$\overline{LT}$	$\overline{RBI}$	D	C	B	A		a	b	c	d	e	f	g
0	H	H	L	L	L	L	H	ON	ON	ON	ON	ON	ON	OFF
1	H	X	L	L	L	H	H	OFF	ON	ON	OFF	OFF	OFF	OFF
2	H	X	L	L	H	L	H	ON	ON	OFF	ON	ON	OFF	ON
3	H	X	L	L	H	H	H	ON	ON	ON	ON	OFF	OFF	ON
4	H	X	L	H	L	L	H	OFF	ON	ON	OFF	OFF	ON	ON
5	H	X	L	H	L	H	H	ON	OFF	ON	ON	OFF	ON	ON
6	H	X	L	H	H	L	H	ON	OFF	ON	ON	ON	ON	ON
7	H	X	L	H	H	H	H	ON	ON	ON	OFF	OFF	OFF	OFF
8	H	X	H	L	L	L	H	ON	ON	ON	ON	ON	ON	ON
9	H	X	H	L	L	H	H	ON	ON	ON	ON	OFF	ON	ON
10	H	X	H	L	H	L	H	OFF	OFF	OFF	ON	ON	OFF	ON
11	H	X	H	L	H	H	H	OFF	OFF	ON	ON	OFF	OFF	ON
12	H	X	H	H	L	L	H	OFF	ON	OFF	OFF	OFF	ON	ON
13	H	X	H	H	L	H	H	ON	OFF	OFF	ON	OFF	ON	ON
14	H	X	H	H	H	L	H	OFF	OFF	OFF	ON	ON	ON	ON
15	H	X	H	H	H	H	H	OFF	OFF	OFF	OFF	OFF	OFF	OFF
BI	X	X	X	X	X	X	L	OFF	OFF	OFF	OFF	OFF	OFF	OFF
RBI	H	L	L	L	L	L	L	OFF	OFF	OFF	OFF	OFF	OFF	OFF
LT	L	X	X	X	X	X	H	ON	ON	ON	ON	ON	ON	ON

RECOMMENDED OPERATING CONDITIONS

PARAMETER		MAX or MIN	TTL	LS	UNIT
I_{CC}		MAX	103	13	mA
V_O (off)	a thru g	MAX	15	15	V
I_O (on)		MAX	40	24	mA
I_{OH}	BI/RBO	MAX	-0.2	-0.05	mA
I_{OL}		MAX	8	3.2	mA

SWITCHING CHARACTERISTICS

PARAMETER		MAX or MIN	TTL	LS
toff	INPUT A	MIN	100	100
ton			100	100
toff	INPUT $\overline{RBI}$	MIN	100	100
ton			100	100

UNIT: ns

250

1-OF-16 DATA SELECTOR/MULTIPLEXER

- 4-Line to 1-Line Multiplexers That Can Select 1-of-16 Data Inputs
- Applications:
  - Boolean Function Generator
  - Parallel-to-Serial Converter
  - Data Source Selector
- Buffered 3-State Bus Driver Inputs Permit Multiplexing From n Lines to One Line
- 3-State Outputs

Logic Diagram

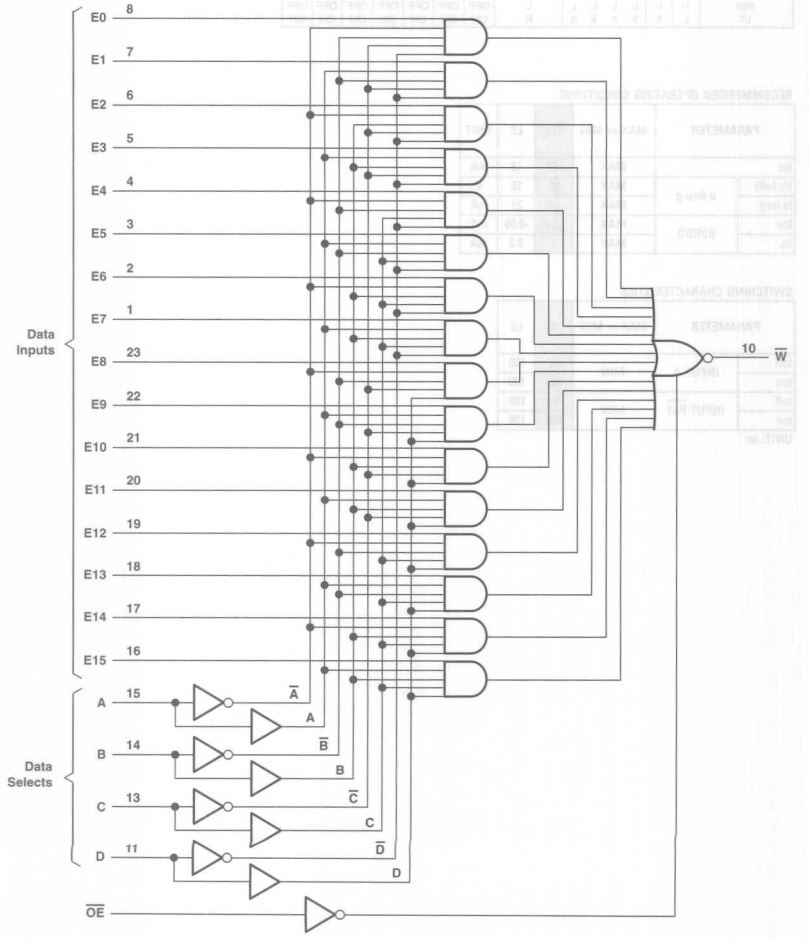

: OBSOLETED or NOT RECOMMENDED NEW DESIGNS

FUNCTION TABLE

INPUTS						OUTPUT
$\overline{G}$	A	B	C	D	Ei	$\overline{W}$
L	L	L	L	L	E0	E0
L	H	L	L	L	E1	E1
L	L	H	L	L	E2	E2
L	H	H	L	L	E3	E3
L	L	L	H	L	E4	E4
L	H	L	H	L	E5	E5
L	L	H	H	L	E6	E6
L	H	H	H	L	E7	E7
L	L	L	L	H	E8	E8
L	H	L	L	H	E9	E9
L	L	H	L	H	E10	E10
L	H	H	L	H	E11	E11
L	L	L	H	H	E12	E12
L	H	L	H	H	E13	E13
L	L	H	H	H	E14	E14
L	H	H	H	H	E15	E15
H	X	X	X	X	X	Z

RECOMMENDED OPERATING CONDITIONS

PARAMETER	MAX or MIN	AS	UNIT
I_{CC}	MAX	50	mA
I_{OH}	MAX	-15	mA
I_{OL}	MAX	48	mA

SWITCHING CHARACTERISTICS

PARAMETER	INPUT	OUTPUT	MAX or MIN	AS
t_{PLH}	DATA	$\overline{W}$	MAX	8
t_{PHL}				7
t_{PLH}	SELECT	$\overline{W}$	MAX	13
t_{PHL}				10.5
t_{PZH}	$\overline{G}$	$\overline{W}$	MAX	7
t_{PZL}				9
t_{PHZ}	$\overline{G}$	$\overline{W}$	MAX	6
t_{PLZ}				6.5

UNIT: ns

- Perform Parallel-to-Serial Conversion
- Complementary Outputs Provide True and Inverted Data

Logic Diagram

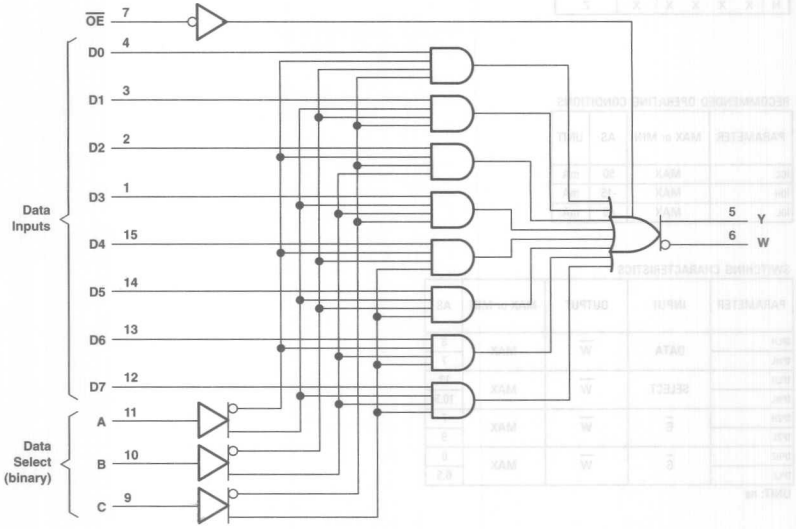

: OBSOLETED or NOT RECOMMENDED NEW DESIGNS

L	H	H	L	D3	$\overline{D3}$
H	L	L	L	D4	$\overline{D4}$
H	L	H	L	D5	$\overline{D5}$
H	H	L	L	D6	$\overline{D6}$
H	H	H	L	D7	$\overline{D7}$

RECOMMENDED OPERATING CONDITIONS

PARAMETER	MAX or MIN	TTL	LS	S	ALS	F	SN74 HC	CD74 HC	CD74 HCT	SN74 AC	CD74 AC	UNIT
I_{CC}	MAX	62	12	85	14	24	0.08	0.16	0.16	0.16	0.16	mA
I_{OH}	MAX	-5.2	-2.6	-6.5	-2.6	-3	-6	-4	-4	-24	-24	mA
I_{OL}	MAX	16	8	20	24	24	6	4	4	24	24	mA

SWITCHING CHARACTERISTICS

PARAMETER	INPUT	OUTPUT	MAX or MIN	TTL	LS	S	ALS	F	SN74 HC	CD74 HC	CD74 HCT	SN74 AC	CD74 AC
t_{PLH}	A, B, C	Y	MAX	45	45	18	18	9.5	51	74	63	18.2	18.2
t_{PHL}				45	45	19.5	24	7.5	51	74	63	18.2	18.2
t_{PLH}	A, B, C	W (CD74: $\overline{Y}$)	MAX	33	33	15	24	12.5	51	74	63	19.6	19.6
t_{PHL}				33	33	13.5	23	9	51	74	63	19.6	19.6
t_{PLH}	ANY D	Y	MAX	28	28	12	10	7	49	53	53	13.5	13.5
t_{PHL}				28	28	12	15	5	49	53	53	13.5	13.5
t_{PLH}	ANY D	W (CD74: $\overline{Y}$)	MAX	15	15	7	15	8	49	53	53	14.9	14.9
t_{PHL}				15	15	7	15	8	49	53	53	14.9	14.9
t_{PZH}	$\overline{G}$	Y	MAX	27	45	19.5	15	7	36	42	45	13.5	13.5
t_{PZL}				40	40	21	15	6.5	36	42	45	13.5	13.5
t_{PZH}	$\overline{G}$	W (CD74: $\overline{Y}$)	MAX	27	27	19.5	15	6	36	42	45	13.5	13.5
t_{PZL}				40	40	21	15	4.5	36	42	45	13.5	13.5
t_{PHZ}	$\overline{G}$	Y	MAX	8	45	8.5	10	8.5	49	42	45	13.5	13.5
t_{PLZ}				23	25	14	10	8	49	42	45	13.5	13.5
t_{PHZ}	$\overline{G}$	W (CD74: $\overline{Y}$)	MAX	8	55	8.5	10	5.5	49	42	45	13.5	13.5
t_{PLZ}				23	25	14	10	4.5	49	42	45	13.5	13.5

UNIT: ns

253

DUAL DATA SELECTORS/MULTIPLEXERS

- 3-State Version of '153
- Perform Parallel-to-Serial Conversion

Logic Diagram

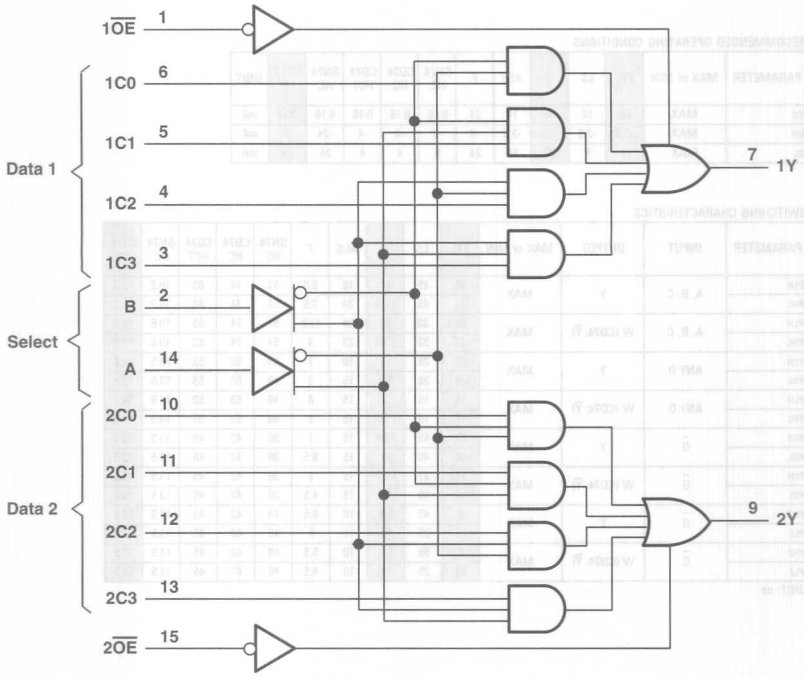

: OBSOLETED or NOT RECOMMENDED NEW DESIGNS

FUNCTION TABLE

SELECT INPUTS		DATA INPUTS				OUTPUT CONTROL	OUTPUT
B	A	C0	C1	C2	C3	$\overline{G}$	Y
X	X	X	X	X	X	H	Z
L	L	L	X	X	X	L	L
L	L	H	X	X	X	L	H
L	H	X	L	X	X	L	L
L	H	X	H	X	X	L	H
H	L	X	X	L	X	L	L
H	L	X	X	H	X	L	H
H	H	X	X	X	L	L	L
H	H	X	X	X	H	L	H

RECOMMENDED OPERATING CONDITIONS

PARAMETER	MAX or MIN	LS	ALS	AS	F	SN74 HC	CD74 HC	CD74 HCT	CD74 AC	CD74 ACT	UNIT
I_{CC}	MAX	14	14	33	23	0.08	0.16	0.16	0.16	0.16	mA
I_{OH}	MAX	-2.6	-2.6	-15	-3	-6	-6	-4	-24	-24	mA
I_{OL}	MAX	8	24	48	24	6	6	4	24	24	mA

SWITCHING CHARACTERISTICS

PARAMETER	INPUT	OUTPUT	MAX or MIN	LS	ALS	AS	F	SN74 HC	CD74 HC	CD74 HCT	CD74 AC	CD74 ACT
t_{PLH}	DATA	Y	MAX	25	10	7.5	8	35	53	57	13.3	18
t_{PHL}				20	14	8	7	35	53	57	13.3	18
t_{PLH}	SELECT	Y	MAX	45	21	13.5	13	38	53	60	20	22
t_{PHL}				32	21	11.5	10	38	53	60	20	22
t_{PZH}	$\overline{G}$	Y	MAX	28	14	12.5	9	25	33	45	11.5	12.6
t_{PZL}				23	16	11.5	9	25	33	45	11.5	12.6
t_{PHZ}	$\overline{G}$	Y	MAX	41	10	6	6	38	45	45	11.5	12.6
t_{PLZ}				27	14	7	7	38	45	45	11.5	12.6

UNIT: ns

Logic Diagram

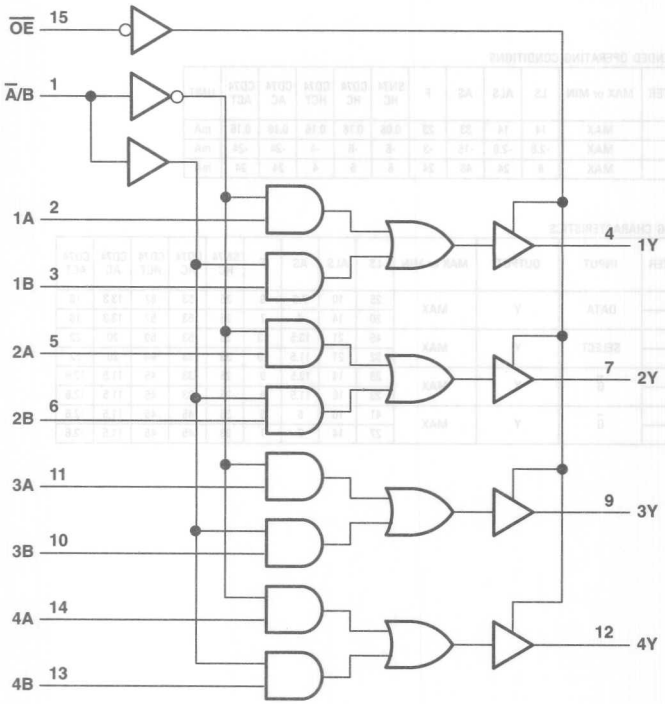

: OBSOLETED or NOT RECOMMENDED NEW DESIGNS

FUNCTION TABLE

INPUTS				OUTPUT
OUTPUT CONTROL	SELECT	A	B	Y
H	X	X	X	Z
L	L	L	X	L
L	L	H	X	H
L	H	X	L	L
L	H	X	H	H

RECOMMENDED OPERATING CONDITIONS

PARAMETER	MAX or MIN	LS	S	ALS	AS	F	SN74 HC	CD74 HC	SN74 HCT	CD74 HCT	AC 11	CD74 AC	ACT 11	CD74 ACT	LVC 3V	UNIT
I_{CC}	MAX	19	87	14	31.9	23	0.08	0.16	0.08	0.16	0.08	0.16	0.08	0.16	0.01	mA
I_{OH}	MAX	-2.6	-6.5	-2.6	-15	-3	-6	-6	-6	-6	-24	-24	-24	-24	-24	mA
I_{OL}	MAX	24	20	24	48	24	6	6	6	6	24	24	24	24	24	mA

SWITCHING CHARACTERISTICS

PARAMETER	INPUT	OUTPUT	MAX or MIN	LS	S	ALS	AS	F	SN74 HC	CD74 HC	SN74 HCT	CD74 HCT	AC 11	CD74 AC	ACT 11	CD74 ACT	LVC 3V
t_{PLH}	DATA	ANY	MAX	13	7.5	10	5.5	7	25	45	38	50	6.4	9.3	6.9	10.7	4.6
t_{PHL}				15	6.5	12	6	6.5	25	45	38	50	7.2	9.3	8.7	10.7	4.6
t_{PLH}	SELECT	ANY	MAX	21	15	18	11	15	25	53	38	57	7.2	13.4	8.2	15.4	6.4
t_{PHL}				24	15	22	10	9.5	25	53	38	57	7.9	13.4	9.4	15.4	6.4
t_{PZH}	G	Y	MAX	30	19.5	16	7.5	8.5	38	45	38	45	6.5	14.7	7.3	16.1	5.6
t_{PZL}				30	21	18	9.5	8.5	38	45	38	45	8.6	14.7	9.6	16.1	5.6
t_{PHZ}	G	Y	MAX	30	8.5	10	6.5	7	38	45	38	45	7.6	14.7	8.4	16.1	4.3
t_{PLZ}				25	14	15	7	7	38	45	38	45	7.6	14.7	8.5	16.1	4.3

UNIT: ns

258

QUAD DATA SELECTORS/MULTIPLEXERS

- 3-State Outputs Interface Directly with System Bus
- Provides Bus Interface from Multiple Sources in High-Performance Systems

Logic Diagram

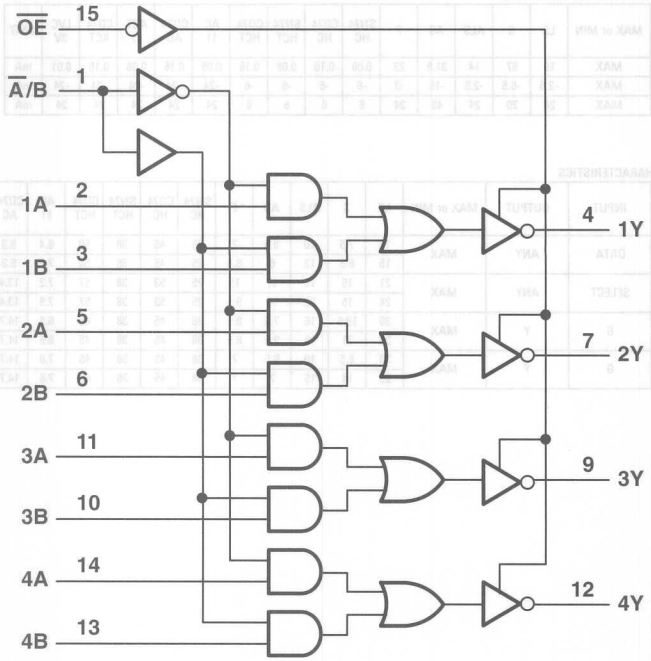

: OBSOLETED or NOT RECOMMENDED NEW DESIGNS

FUNCTION TABLE

INPUTS				OUTPUT
OUTPUT CONTROL	SELECT	A	B	
H	X	X	X	Z
L	L	L	X	H
L	L	H	X	L
L	H	X	L	H
L	H	X	H	L

RECOMMENDED OPERATING CONDITIONS

PARAMETER	MAX or MIN	LS	S	ALS	AS	F	SN74 HC	CD74 HC	CD74 HCT	CD74 ACT	UNIT
I_{CC}	MAX	16	87	13	25.2	23	0.08	0.16	0.16	0.16	mA
I_{OH}	MAX	-2.6	-6.5	-2.6	-15	-3	-6	-6	-6	-24	mA
I_{OL}	MAX	8	20	24	48	24	6	6	6	24	mA

SWITCHING CHARACTERISTICS

PARAMETER	INPUT	OUTPUT	MAX or MIN	LS	S	ALS	AS	F	SN74 HC	CD74 HC	CD74 HCT	CD74 ACT
t_{PLH}	DATA	Y	MAX	12	6	8	5	6	25	24	34	10.7
t_{PHL}				17	6	7	4	5.5	25	24	34	10.7
t_{PLH}	SELECT	Y	MAX	21	12	25	9.5	9.5	29	35	43	15.4
t_{PHL}				24	12	20	10	11	29	35	43	15.4
t_{PZH}	$\overline{G}$	Y	MAX	30	19.5	18	8	8.5	38	35	35	16.1
t_{PZL}				30	21	18	10	8.5	38	35	35	16.1
t_{PHZ}	$\overline{G}$	Y	MAX	30	8.5	10	6	7	38	38	38	16.1
t_{PLZ}				25	14	18	6.5	7	38	38	38	16.1

UNIT: ns

259

8-BIT ADDRESSABLE LATCHES

- 8-Bit Parallel-Out Storage Register Performs Serial-to-Parallel Conversion with Storage
- Asynchronous Parallel Clear
- Active-High Decoder
- Enable/Disable Input Simplifies Expansion
- Expandable for n-Bit Applications
- Four Distinct Functional Modes

Logic Diagram

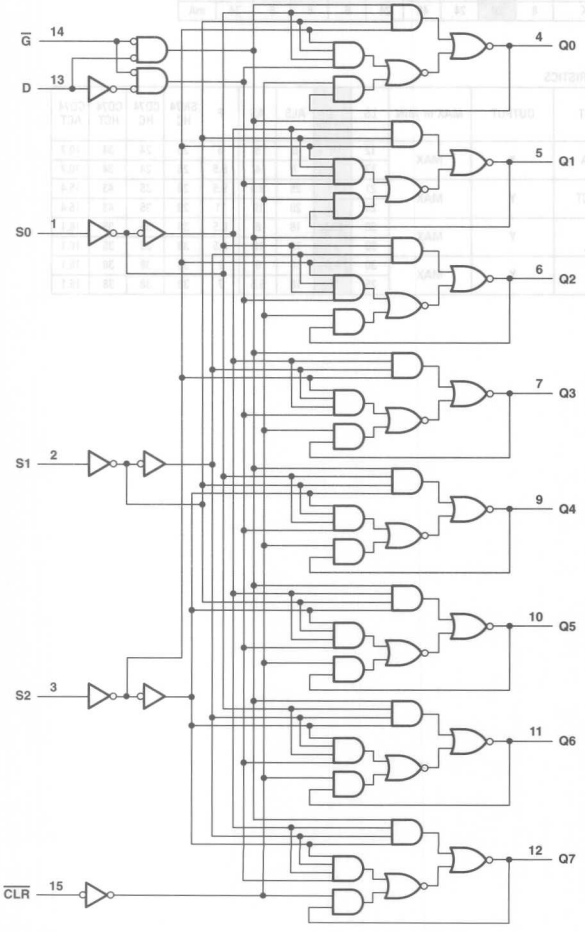

: OBSOLETED or NOT RECOMMENDED NEW DESIGNS

LATCH SELECTION

SELECT INPUTS			LATCH ADDRESSED
C	B	A	
L	L	L	0
L	L	H	1
L	H	L	2
L	H	H	3
H	L	L	4
H	L	H	5
H	H	L	6
H	H	H	7

FUNCTION TABLE

INPUTS		OUTPUT OF ADDRESSED LATCH	EACH OTHER OUTPUT	FUNCTION
$\overline{CLEAR}$	$\overline{G}$			
H	L	D	Qi0	Addressable latch
H	H	Qi0	Qi0	Memory
L	L	D	L	8-line demultiplexer
L	H	L	L	Clear

RECOMMENDED OPERATING CONDITIONS

PARAMETER	MAX or MIN	TTL	LS	ALS	SN74 HC	CD74 HC	CD74 HCT	UNIT
I_{CC}	MAX	90	36	22	0.08	0.16	0.16	mA
I_{OH}	MAX	16	8	8	4	4	4	mA
I_{OL}	MAX	-0.8	-0.4	-0.4	-4	-4	-4	mA

SWITCHING CHARACTERISTICS

PARAMETER		INPUT	OUTPUT	MAX or MIN	TTL	LS	ALS	SN74 HC	CD74 HC	CD74 HCT
t_w	$\overline{G}$			MIN	15	17	15	20	21	27
	$\overline{CLR}$				15	10	10	20	21	27
t_{su}	DATA			MIN	15	20	15	19	24	26
	ADDRESS				5	17	15	19	24	26
t_h	DATA			MIN	0	0	0	5	0	0
	ADDRESS				20	0	0	5	0	0
t_{PLH}		$\overline{CLEAR}$	Any Q	MAX	25	18	12	38	47	59
t_{PHL}		DATA	Any Q	MAX	24	30	19	33	56	59
t_{PLH}					20	20	12	33	56	59
t_{PHL}		ADDRESS	Any Q	MAX	28	27	22	50	56	61
t_{PLH}					28	20	12	50	56	61
t_{PHL}		ENABLE	Any Q	MAX	20	24	20	43	51	57
t_{PHL}					20	24	13	43	51	57

UNIT: ns

260

DUAL 5-INPUT POSITIVE-NOR GATES

● $Y = \overline{A + B + C + D + E}$

Logic Diagram

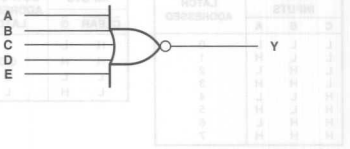

RECOMMENDED OPERATING CONDITIONS

PARAMETER	MAX or MIN	S	F	UNIT
I_{CC}	MAX	45	9.5	mA
I_{OH}	MAX	-1	-1	mA
I_{OL}	MAX	20	20	mA

SWITCHING CHARACTERISTICS

PARAMETER	INPUT	OUTPUT	MAX or MIN	S	F
t_{PLH}	A, B, C, D, E	Y	MAX	5.5	6.5
t_{PHL}				6	4.5

UNIT: ns

: OBSOLETED or NOT RECOMMENDED NEW DESIGNS

265

QUAD COMPLEMENTARY-OUTPUT ELEMENTS

- $Y = \overline{A}, W = A$
- $Y = AB, W = AB$

Logic Diagram

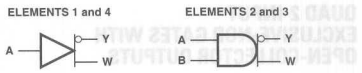

RECOMMENDED OPERATING CONDITIONS

PARAMETER	MAX or MIN	TTL	UNIT
I_{CC}	MAX	34	mA
I_{OH}	MAX	-0.8	mA
I_{OL}	MAX	16	mA

SWITCHING CHARACTERISTICS

PARAMETER	INPUT	OUTPUT	MAX or MIN	TTL
tPLH (W)	A or B	W	MAX	18
tPHL (Y)	A or B	Y	MAX	18
tPLH (W)	A or B	W	MAX	18
tPHL (Y)	A or B	Y	MAX	18
tPLH (W) -tPHL (Y)	A or B	W with respect Y	MAX	±3
tPHL (W) -tPLH (Y)	A or B	W with respect Y	MAX	±3

UNIT: ns

PRODUCTION DATA information is current as of publication date. Products conform to specifications per the terms of Texas Instruments standard warranty. Production processing does not necessarily include testing of all parameters. See www.ti.com/sc/logic for the most current data sheets.

266

QUAD 2-INPUT

FUNCTION TABLE

INPUTS		OUTPUT
A	B	Y
L	L	H
L	H	L
H	L	L
H	H	H

Logic Diagram

RECOMMENDED OPERATING CONDITIONS

PARAMETER	MAX or MIN	LS	HC	UNIT
I_{CC}	MAX	13	0.02	mA
V_{OH}	MAX	5.5	Vcc	V
I_{OL}	MAX	8	4	mA

SWITCHING CHARACTERISTICS

PARAMETER	INPUT	OUTPUT	MAX or MIN	LS	SN74 HC
t_{PLH}	A or B Other Input Low	Y	MAX	30	31
t_{PHL}	A or B Other Input Low	Y	MAX	30	25
t_{PLH}	A or B Other Input High	Y	MAX	30	31
t_{PHL}	A or B Other Input High	Y	MAX	30	25

UNIT: ns

273

OCTAL D-TYPE FLIP-FLOPS

- Contain Eight Flip-Flops with Single-Rail Outputs
- Buffered Clock and Direct-Clear Inputs

Logic Diagram

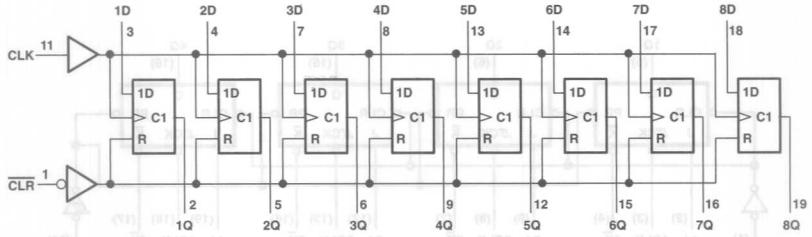

FUNCTION TABLE

INPUTS			OUTPUT
CLEAR	CLOCK	D	Q
L	X	X	L
H	↑	H	H
H	↑	L	L
H	L	X	Q_0

RECOMMENDED OPERATING CONDITIONS

PARAMETER	MAX or MIN	TTL	LS	ALS	SN74 HC	CD74 HC	SN74 HCT	CD74 HCT	ABT	LVTH 3V	CD74 AC	CD74 ACT	AHC	AHCT	LV 3V	LV 5V	UNIT
I_{CC}	MAX	94	27	29	0.08	0.16	0.08	0.16	30	5	0.16	0.16	0.04	0.04	-	0.02	mA
I_{OH}	MAX	-0.8	-0.4	-2.6	-4	-4	-4	-4	-32	-32	-24	-24	-8	-8	-6	-12	mA
I_{OL}	MAX	16	8	24	4	4	4	4	64	64	24	24	8	8	6	12	mA

SWITCHING CHARACTERISTICS

PARAMETER		INPUT	OUTPUT	MAX or MIN	TTL	LS	ALS	SN74 HC	CD74 HC	SN74 HCT	CD74 HCT	ABT	LVTH 3V	CD74 AC	CD74 ACT	AHC
fmax				MIN	30	30	35	21	20	16	16	150	150	100	85	70
t_w				MIN	16.5	20	14	20	24	25	30	3.3	3.3	5	6	5
t_{su}	DATA INPUT			MIN	20	20	10	25	18	25	18	2.5	2.3	2	2	4.5
	CLR INACVIVE			MIN	25	25	15	25	-	25	-	2	2.3	-	-	2
th				MIN	5	5	0	0	3	0	3	1.2	0	2	2	1
t_{PHL}		$\overline{CLEAR}$	ANY Q	MAX	27	27	18	40	45	42	48	7.4	4.9	13.5	13.5	12
t_{PLH}		CLOCK	ANY Q	MAX	27	27	12	40	45	42	45	6.5	4.8	13.5	13.5	12.5
t_{PHL}					27	27	15	40	45	42	45	7.3	4.3	13.5	13.5	12.5

PARAMETER		INPUT	OUTPUT	MAX or MIN	AHCT	LV 3V	LV 5V
fmax				MIN	45	45	70
t_w				MIN	6.5	6.5	5
t_{su}	DATA INPUT			MIN	5	6.5	4.5
	CLR INACVIVE			MIN	2.5	2.5	2
th				MIN	0	2	1
t_{PHL}		$\overline{CLEAR}$	ANY Q	MAX	12.6	19.5	12
t_{PLH}		CLOCK	ANY Q	MAX	9.8	19.5	12.5
t_{PHL}					11	19.5	12.5

UNIT fmax : MHz, other : ns

PRODUCTION DATA information is current as of publication date. Products conform to specifications per the terms of Texas Instruments standard warranty. Production processing does not necessarily include testing of all parameters. See www.ti.com/sc/logic for the most current data sheets.

276

QUAD J-$\overline{K}$ FLIP-FLORS

- Separate Negative-Edge-Triggered Clocks
- Fully Buffered Outputs

Logic Diagram

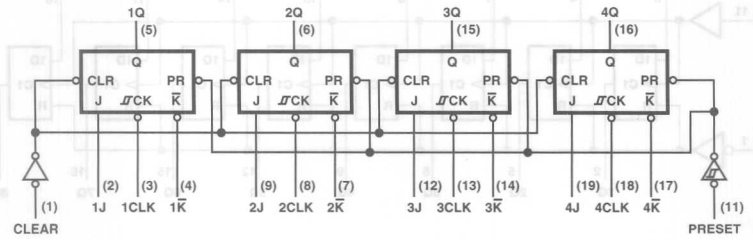

FUNCTION TABLE

COMMON INPUTS		INPUTS			OUTPUT
PRESET	CLEAR	CLOCK	J	$\overline{K}$	Q
L	H	X	X	X	H
H	L	X	X	X	L
L	L	X	X	X	H†
H	H	↓	L	H	Q_0
H	H	↓	H	H	H
H	H	↓	L	L	L
H	H	↓	H	L	TOGGLE
H	H	H	X	X	Q_0

† The output levels in this configuration are not guaranteed to meet the minimum levels for V_{OH}. Furthermore, this configuration is nonstable; that is, it will not persist when either $\overline{PRE}$ or $\overline{CLR}$ returns to its inactive (high) level.

RECOMMENDED OPERATING CONDITIONS

PARAMETER	MAX or MIN	TTL	UNIT
I_{CC}	MAX	81	mA
I_{OH}	MAX	-0.8	mA
I_{OL}	MAX	16	mA

SWITCHING CHARACTERISTICS

PARAMETER		INPUT	OUTPUT	MAX or MIN	TTL
fmax				MIN	35
tw	CLOCK high			MIN	13.5
	CLOCK low				15
tsu	J, K			MIN	3
	$\overline{CLR}$, $\overline{PR}$ E				10
th				MIN	10
t_{PLH}		$\overline{PRESET}$	Q	MAX	25
t_{PHL}		$\overline{CLEAR}$	Q	MAX	30
t_{PLH}		CLOC K	Q	MAX	30
t_{PHL}					30

UNIT fmax : MHz, other : ns

: OBSOLETED or NOT RECOMMENDED NEW DESIGNS

279

QUAD $\overline{S}$-$\overline{R}$ LATCHES

Logic Diagram

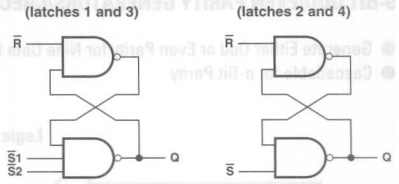

RECOMMENDED OPERATING CONDITIONS

PARAMETER	MAX or MIN	TTL	LS	UNIT
I_{CC}	MAX	30	7	mA
I_{OH}	MAX	-0.8	-0.4	mA
I_{OL}	MAX	16	8	mA

SWITCHING CHARACTERISTICS

PARAMETER	INPUT	OUTPUT	MAX or MIN	TTL	LS
t_w			MIN	20	20
t_{PLH}	$\overline{S}$	Q	MAX	22	22
t_{PHL}				15	21
t_{PHL}	$\overline{R}$		MAX	27	27

UNIT: ns

Logic Diagram

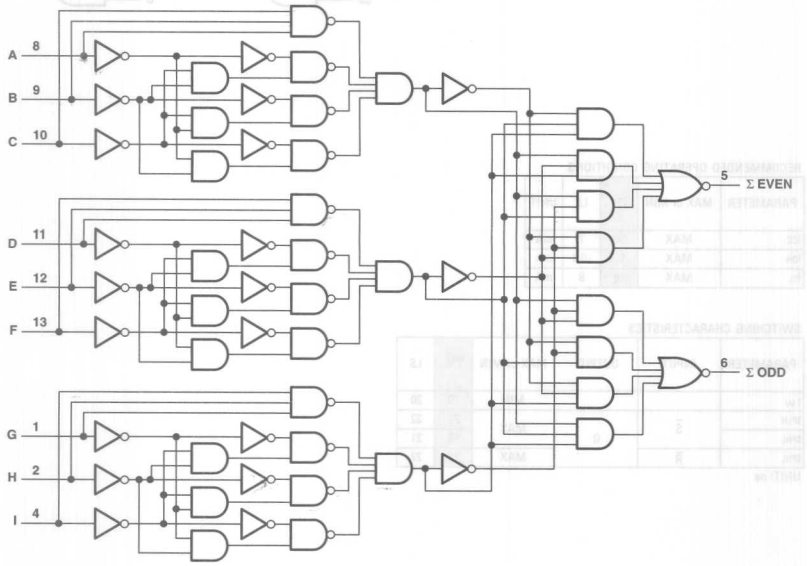

: OBSOLETED or NOT RECOMMENDED NEW DESIGNS

FUNCTION TABLE

NO. OF INPUTS A–I THAT ARE HIGH	OUTPUTS	
	Σ EVEN	Σ ODD
0, 2, 4, 6, 8	H	L
1, 3, 5, 7, 9	L	H

RECOMMENDED OPERATING CONDITIONS

PARAMETER	MAX or MIN	LS	S	ALS	AS	F	SN74 HC	CD74 HC	CD74 HCT	CD74 AC	CD74 ACT	UNIT
I_{CC}	MAX	27	105	16	35	35	0.08	0.16	0.16	0.16	0.16	mA
I_{OH}	MAX	-0.4	-1	-2.6	-2	-1	-4	-4	-4	-24	-24	mA
I_{OL}	MAX	8	20	24	20	20	4	4	4	24	24	mA

SWITCHING CHARACTERISTICS

PARAMETER	INPUT	OUTPUT	MAX or MIN	LS	S	ALS	AS	F	SN74 HC	CD74 HC	CD74 HCT	CD74 AC	CD74 ACT
t_{PLH}	DATA	S EVEN	MAX	50	21	20	12	10	52	60	63	20	21.6
t_{PHL}				45	18	20	11	11	52	60	63	20	21.6
t_{PLH}	DATA	S ODD	MAX	35	21	20	12	10	52	60	68	21	21.6
t_{PHL}				50	18	22	11.5	11	52	60	68	21	21.6

UNIT: ns

PRODUCTION DATA information is current as of publication date. Products conform to specifications per the terms of Texas Instruments standard warranty. Production processing does not necessarily include testing of all parameters. See www.ti.com/sc/logic for the most current data sheets.

283

4-BIT BINARY FULL ADDERS

- Full-Carry Look-Ahead Across the Four Bits

Logic Diagram

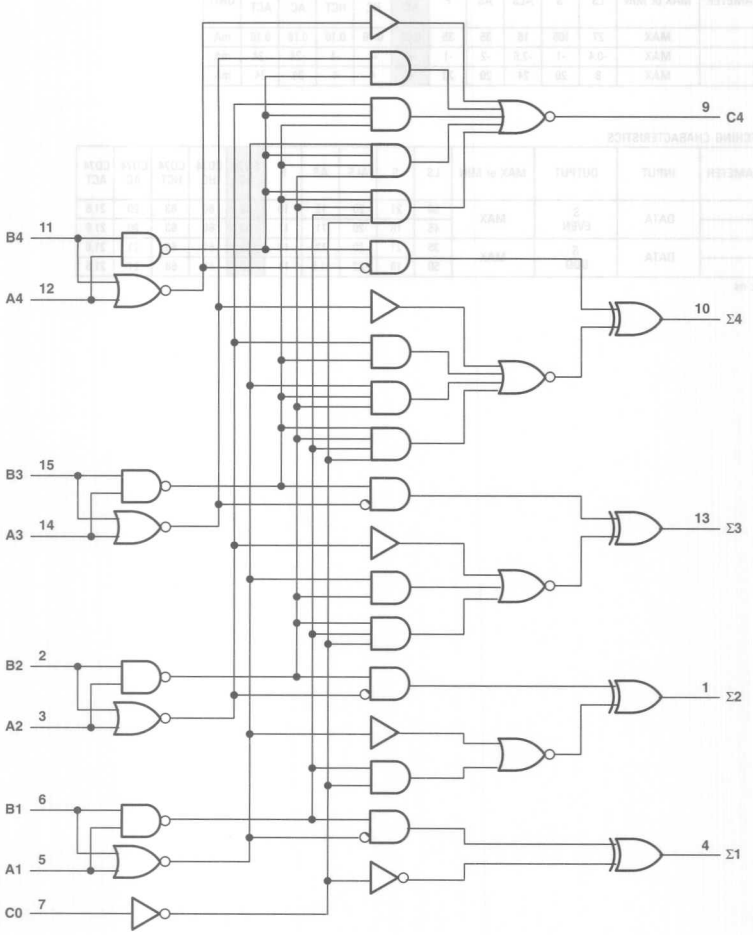

: OBSOLETED or NOT RECOMMENDED NEW DESIGNS

FUNCTION TABLE

INPUTS				OUTPUTS					
				WHEN C0 = L			WHEN C0 = H		
				WHEN C2 = L			WHEN C2 = H		
A1	B1	A2	B2	Σ1	Σ2	C2	Σ1	Σ2	C2
A3	B3	A4	B4	Σ3	Σ4	C4	Σ3	Σ4	C4
L	L	L	L	L	L	L	H	L	L
H	L	L	L	H	L	L	L	H	L
L	H	L	L	H	L	L	L	H	L
H	H	L	L	L	H	L	H	H	L
L	L	H	L	L	H	L	H	H	L
H	L	H	L	H	H	L	L	L	H
L	H	H	L	H	H	L	L	L	H
H	H	H	L	L	L	H	H	L	H
L	L	L	H	L	H	L	H	H	L
H	L	L	H	H	H	L	L	L	H
L	H	L	H	H	H	L	L	L	H
H	H	L	H	L	L	H	H	L	H
L	L	H	H	L	L	H	H	L	H
H	L	H	H	H	L	H	L	H	H
L	H	H	H	H	L	H	L	H	H
H	H	H	H	L	H	H	H	H	H

RECOMMENDED OPERATING CONDITIONS

PARAMETER		MAX or MIN	TTL	LS	S	F	CD74 HC	CD74 HCT	CD74 AC	CD74 ACT	UNIT
I_{CC}		MAX	110	39	160	55	0.16	0.16	0.16	0.16	mA
I_{OH}	Any output except C4	MAX	-0.8	-0.4	-1	-1	-4	-4	-24	-24	mA
	C4	MAX	-0.4	-0.4	-0.5	-1	-4	-4	-24	-24	
I_{OL}	Any output except C4	MAX	16	8	20	20	4	4	24	24	mA
	C4	MAX	8	8	10	20	4	4	24	24	

SWITCHING CHARACTERISTICS

PARAMETER	INPUT	OUTPUT	MAX or MIN	TTL	LS	S	F	CD74 HC	CD74 HCT	CD74 AC	CD74 ACT
t_{PLH}	C0	S	MAX	21	24	18	10.5	69	47	17.6	17.6
t_{PHL}			MAX	21	24	18	10.5	69	47	17.6	17.6
t_{PLH}	Ai or Bi	Si	MAX	24	24	18	10.5	63	69	18.2	18.2
t_{PHL}			MAX	24	24	18	10.5	63	69	18.2	18.2
t_{PLH}	C0	C4	MAX	14	17	11	8.5	59	80	17.6	17.6
t_{PHL}			MAX	16	22	11	8	59	80	17.6	17.6
t_{PLH}	Ai or Bi		MAX	14	17	12	8.5	59	72	17.6	17.6
t_{PHL}			MAX	16	17	12	8	59	72	17.6	17.6

UNIT: ns

● 74ACT11xxx: Product Available in Reduced-Noise Advanced CMOS (11000 Series)

● 74ACT11xxx: Product Available in Reduced-Noise Advanced CMOS (11000 Series)

Logic Diagram

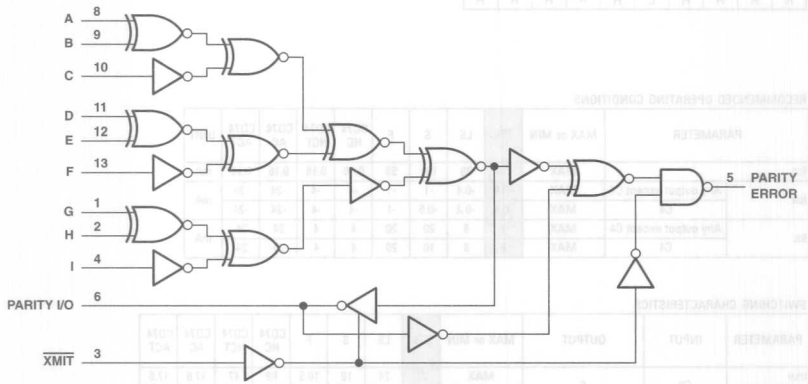

: OBSOLETED or NOT RECOMMENDED NEW DESIGNS

FUNCTION TABLE

NUMBER OF INPUTS (A–I) THAT ARE HIGH	$\overline{\text{XMIT}}$	PARITY I/O	PARITY ERROR
0, 2, 4, 6, 8	l	H	H
1, 3, 5, 7, 9	l	L	H
0, 2, 4, 6, 8	h h	h l	H L
1, 3, 5, 7, 9	h h	h l	L H

h = high input level l = low input level
H = high output level L = low output level

RECOMMENDED OPERATING CONDITIONS

PARAMETER		MAX or MIN	AS	AC 11	ACT 11	UNIT
I_{CC}		MAX	50	0.08	0.08	mA
I_{OH}	Parity error	MAX	-2	-24	-24	mA
	Parity I/O	MAX	-15	-24	-24	mA
I_{OL}	Parity error	MAX	20	24	24	mA
	Parity I/O	MAX	48	24	24	mA

SWITCHING CHARACTERISTICS

PARAMETER	INPUT	OUTPUT	MAX or MIN	AS	AC 11	ACT 11
t_{PLH}	A to I	Parity I/O	MAX	15	9	10.4
t_{PHL}				14	107	12
t_{PLH}	A to I	Parity error	MAX	16.5	10	11.3
t_{PHL}				16.5	12	12.9
t_{PLH}	Parity I/O	Parity error	MAX	9	6.2	7.7
t_{PHL}				9	7.9	9.1
t_{PZH}	$\overline{\text{XMIT}}$	Parity I/O	MAX	13	5.3	7.3
t_{PZL}				16	8.9	11.4
t_{PHZ}				11.5	6.5	8.5
t_{PLZ}				10	6.3	7.8

UNIT: ns

292

PROGRAMMABLE FREQUENCY DIVIDER/DIGITAL TIMER

- Digitally Programmable from 2^2 to 2^{31}
- Easily Expandable
- Applications:
  - Frequency Division
  - Digital Timing

Logic Diagram

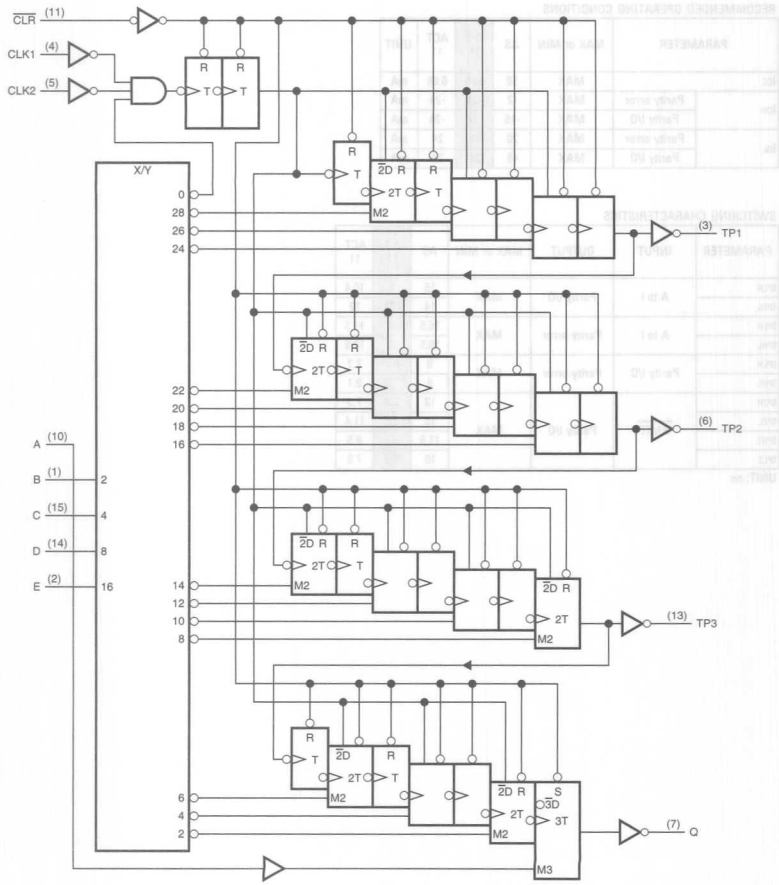

: OBSOLETED or NOT RECOMMENDED NEW DESIGNS

FUNCTION TABLE

CLEAR	CLK 1	CLK 2	Q OUTPUT MODE
L	X	X	Cleared to L
H	↓	L	Count
H	L	↓	Count
H	H	X	Inhibit
H	X	H	Inhibit

RECOMMENDED OPERATING CONDITIONS

PARAMETER	MAX or MIN	LS	UNIT
I_{CC}	MAX	75	mA
I_{OH} (Q only)	MAX	-1.2	V
I_{OL} (Q only)	MAX	24	mA

SWITCHING CHARACTERISTICS

PARAMETER	INPUT	OUTPUT	MAX or MIN	LS
fmax	CLK		MIN	30
t_{PLH}	CLK	Q	MAX	90
t_{PHL}	CLK	Q	MAX	120
t_{PHL}	$\overline{CLR}$	$\overline{Q}$	MAX	65

UNIT fmax : MHz, other : ns

Logic Diagram

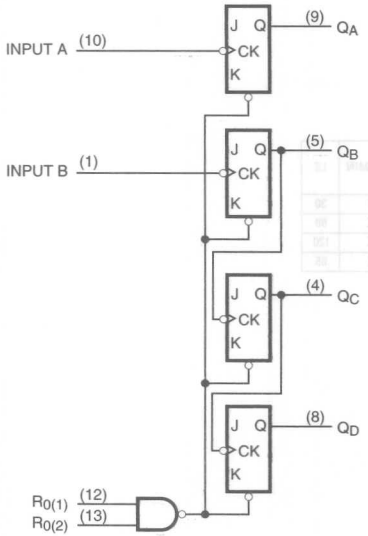

: OBSOLETED or NOT RECOMMENDED NEW DESIGNS

COUNT SEQUENCE

COUNT	OUTPUTS			
	Q_D	Q_C	Q_B	Q_A
0	L	L	L	L
1	L	L	L	H
2	L	L	H	L
3	L	L	H	H
4	L	H	L	L
5	L	H	L	H
6	L	H	H	L
7	L	H	H	H
8	H	L	L	L
9	H	L	L	H
10	H	L	H	L
11	H	L	H	H
12	H	H	L	L
13	H	H	L	H
14	H	H	H	L
15	H	H	H	H

NOTE: Output Q_A is connected to input B.

RESET/COUNT FUNCTION TABLE

RESET INPUTS		OUTPUTS			
$R_{0(1)}$	$R_{0(2)}$	Q_D	Q_C	Q_B	Q_A
H	H	L	L	L	L
L	X	COUNT			
X	L	COUNT			

RECOMMENDED OPERATING CONDITIONS

PARAMETER	MAX or MIN	TTL	LS	UNIT
I_{CC}	MAX	39	15	mA
I_{OH}	MAX	-0.8	-0.4	mA
I_{OL}	MAX	16	8	mA

SWITCHING CHARACTERISTICS

PARAMETER		INPUT	OUTPUT	MAX or MIN	TTL	LS
fmax		A	QA	MIN	32	32
		B	QB	MIN	16	16
tw	A	A, B		MIN	15	15
	B				30	30
	Reset				15	15
tsu				MIN	25	25
t_{PLH}		A	QA	MAX	16	16
t_{PHL}					18	18
t_{PLH}		A	QB	MAX	70	70
t_{PHL}					70	70
t_{PLH}		B	QB	MAX	16	16
t_{PHL}					21	21
t_{PLH}		B	QC	MAX	32	32
t_{PHL}					35	35
t_{PLH}		B	QD	MAX	51	51
t_{PHL}					51	51

UNIT fmax : MHz, other : ns

294

PROGRAMMABLE FREQUENCY DIVIDER/DIGITAL TIMER

- Digitally Programmable from 2^2 to 2^{15}
- Easily Expandable
- Applications
  - Frequency Division
  - Digital Timing

Logic Diagram

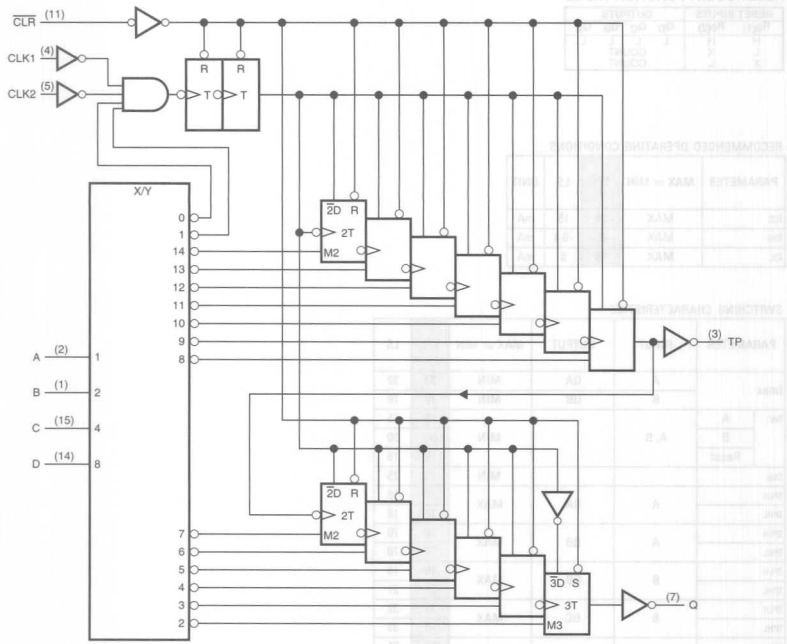

: OBSOLETED or NOT RECOMMENDED NEW DESIGNS

FUNCTION TABLE

PROGRAMMING INPUTS				FREQUENCY DIVISION			
				Q		TP	
D	C	B	A	BINARY	DECIMAL	BINARY	DECIMAL
L	L	L	L	Inhibit	Inhibit	Inhibit	Inhibit
L	L	L	H	Inhibit	Inhibit	Inhibit	Inhibit
L	L	H	L	2^2	4	2^9	512
L	L	H	H	2^3	8	2^9	512
L	H	L	L	2^4	16	2^9	512
L	H	L	H	2^5	32	2^9	512
L	H	H	L	2^6	64	2^9	512
L	H	H	H	2^7	128	Disabled Low	
H	L	L	L	2^8	256	2^2	4
H	L	L	H	2^9	512	2^3	8
H	L	H	L	2^{10}	1024	2^4	16
H	L	H	H	2^{11}	2048	2^5	32
H	H	L	L	2^{12}	4096	2^6	64
H	H	L	H	2^{13}	8192	2^7	128
H	H	H	L	2^{14}	16384	2^8	256
H	H	H	H	2^{15}	32768	2^9	512

RECOMMENDED OPERATING CONDITIONS

PARAMETER	MAX or MIN	LS	UNIT
I_{CC}	MAX	50	mA
I_{OH}	MAX	-1.2	V
I_{OL}	MAX	24	mA

SWITCHING CHARACTERISTICS

PARAMETER	INPUT	OUTPUT	MAX or MIN	LS
fmax	CLK		MIN	30
tw	CLK 1 or 2		MIN	16
	CLR		MIN	35
t_{PLH}	CLK 1 or 2	Q	MAX	90
t_{PHL}				120
t_{PLH}	$\overline{CLR}$	$\overline{Q}$	MAX	65

UNIT fmax : MHz, other : ns

Logic Diagram

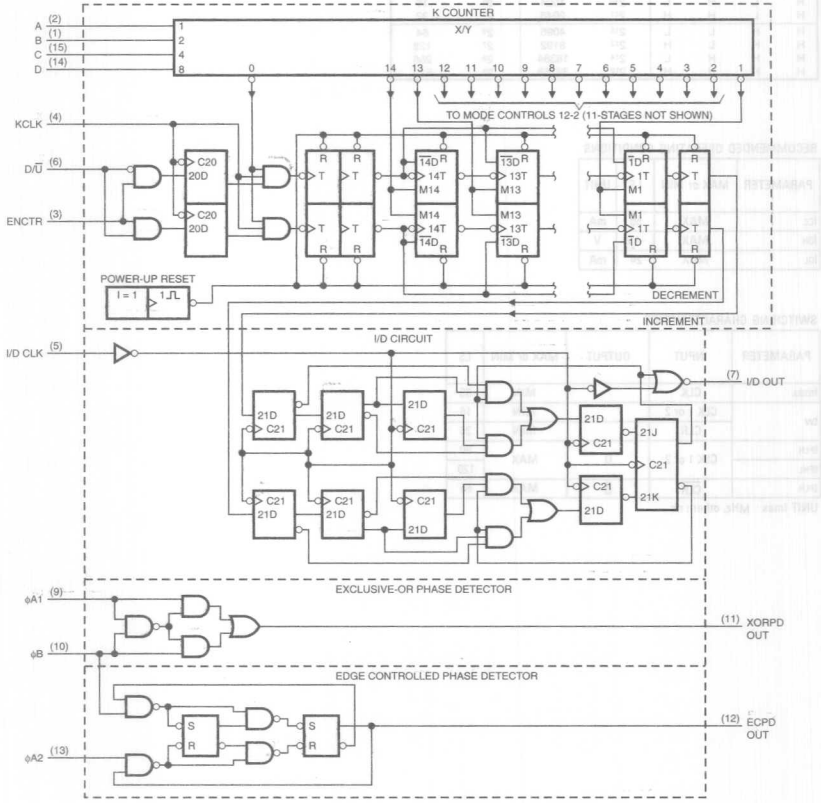

FUNCTION TABLES

K COUNTER FUNCTION TABLE (DIGITAL CONTROL)

D	C	B	A	MODULO (K)
L	L	L	L	Inhibited
L	L	L	H	2^2
L	L	H	L	2^4
L	L	H	H	2^5
L	H	L	L	2^6
L	H	L	H	2^7
L	H	H	L	2^8
L	H	H	H	2^9
H	L	L	L	2^{10}
H	L	L	H	2^{11}
H	L	H	L	2^{12}
H	L	H	H	2^{13}
H	H	L	L	2^{14}
H	H	L	H	2^{15}
H	H	H	L	2^{16}
H	H	H	H	2^{17}

EXCLUSIVE OR PHASE DETECTOR

ϕA1	ϕB	XORPD OUT
L	L	L
L	H	H
H	L	H
H	H	L

EDGE-CONTROLLED PHASE DETECTOR

ϕA2	ϕB	ECPD OUT
H or L	↓	H
↓	H or L	L
H or L	↑	No change
↑	H or L	No change

RECOMMENDED OPERATING CONDITIONS

PARAMETER	MAX or MIN	LS	CD74 HC	CD74 HCT	CD74 ACT	UNIT
I_{CC}	MAX	120	0.16	0.16	0.08	mA
I_{OH} (I/D OUT)	MAX	-1	-6	-4	-24	mA
I_{OH} (XOR, ECPD)	MAX	-0.4	-6	-4	-24	mA
I_{OL} (I/D OUT)	MAX	24	6	4	24	mA
I_{OL} (XOR, ECPD)	MAX	8	6	4	24	mA

SWITCHING CHARACTERISTICS

PARAMETER		INPUT		OUTPUT	MAX or MIN	LS	CD74 HC	CD74 HCT	CD74 ACT
fmax		K CLK		I/D OUT	MIN	32	20	20	45
		I/D CLK		I/D OUT		16	13	13	35
tw	K CLK				MIN	16	24	24	8
	I/D CLK					33	38	38	9
tsu	D/$\overline{U}$				MIN	30	30	30	17
	ENCLR					31	30	30	16
th	D/$\overline{U}$				MIN	0	0	0	7
	ENCLR					0	0	0	6
t_{PLH}		I/D CLK ↑		I/D OUT	MAX	25	53	53	24
t_{PHL}						35	53	53	24
t_{PLH}		ϕA1 or ϕB	other input low	X or OUT	MAX	15	45	45	22
			other input high			25	45	45	22
t_{PHL}		ϕA1 or ϕB	other input low	X or OUT		25	45	45	22
			other input high			25	45	45	22
t_{PLH}		ϕB ↓		ECPD OUT	MAX	30	60	60	30
t_{PHL}		ϕA2 ↓		ECPD OUT		30	60	60	30

UNIT fmax : MHz, other : ns

PRODUCTION DATA information is current as of publication date. Products conform to specifications per the terms of Texas Instruments standard warranty. Production processing does not necessarily include testing of all parameters. See www.ti.com/sc/logic for the most current data sheets.

298

QUAD 2-INPUT MULTIPLEXERS WITH STORAGE

- Outputs Storage Register

Logic Diagram

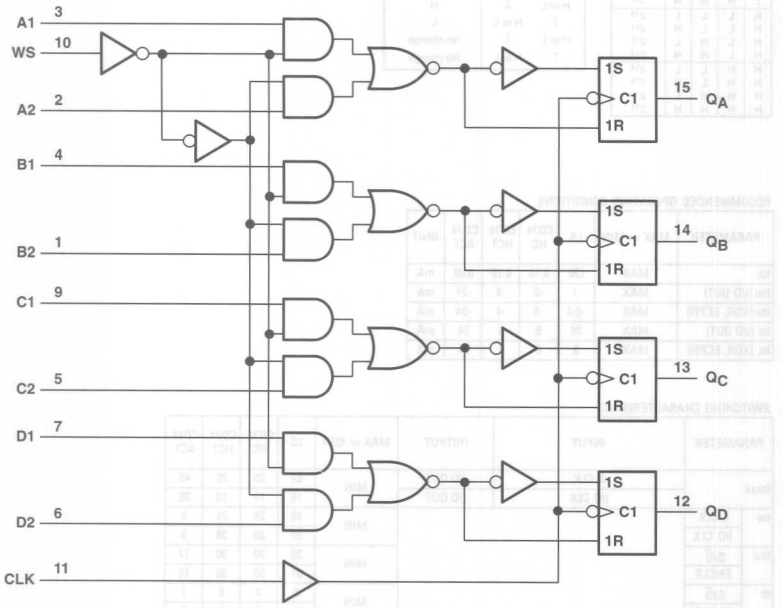

: OBSOLETED or NOT RECOMMENDED NEW DESIGNS

FUNCTION TABLE

INPUTS		OUTPUTS			
WORD SELECT	CLOCK	Q_A	Q_B	Q_C	Q_D
L	↓	A1	B1	C1	D1
H	↓	A2	B2	C2	D2
X	H	Q_{A0}	Q_{B0}	Q_{C0}	Q_{D0}

† a1, a2, etc. = the level of steady-state input at A1, A2, etc.
QA0, QB0, etc. = the level of QA, QB, etc. entered on the most recent O transition of CLK

RECOMMENDED OPERATING CONDITIONS

PARAMETER	MAX or MIN	TTL	LS	AS	SN74 HC	UNIT
I_{CC}	MAX	65	21	36	0.08	mA
I_{OL}	MAX	16	8	20	4	mA
I_{OH}	MAX	-0.8	-0.4	-2	-4	mA

SWITCHING CHARACTERISTICS

PARAMETER		INPUT	OUTPUT	MAX or MIN	TTL	LS	AS	SN74 HC
t_w				MIN	20	20	8	27
t_{su}	Data			MIN	15	15	4.5	21
	Word Select				25	25	13	21
t_h	Data			MIN	5	5	3.5	0
	Word Select				0	0	1	0
t_{PLH}		CLK	GA to GD	MAX	27	27	9	31
t_{PHL}					32	32	11	31

UNIT: ns

299

8-BIT BIDIRECTIONAL UNIVERSAL SHIFT/STORAGE REGISTERS

- Multiplexed I/O Ports Provide Improved Bit Density
- Four Modes of Operation:
  - Hold (Store)
  - Shift Right
  - Shift Left
  - Load Data
- Operate with Outputs Enabled or at High Impedance
- 3-State Outputs Drive Bus Lines Directly
- Can Be Cascaded for n-Bit Word Lengths

Logic Diagram

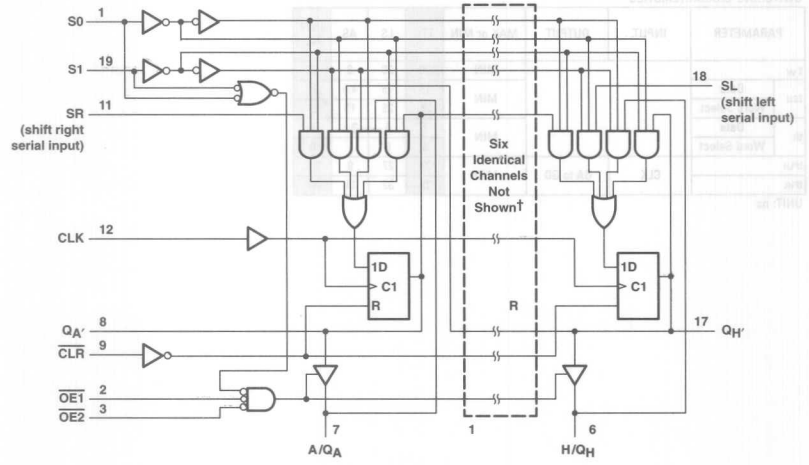

† I/O ports not shown: B/Q_B (13), C/Q_C (6), D/Q_D (14), E/Q_E (5), F/Q_F (15), and G/Q_G (4).

: OBSOLETED or NOT RECOMMENDED NEW DESIGNS

FUNCTION TABLE

MODE	INPUTS								I/O PORTS								OUTPUTS	
	$\overline{CLR}$	S1	S0	$\overline{OE1}$†	$\overline{OE2}$†	CLK	SL	SR	A/Q_A	B/Q_B	C/Q_C	D/Q_D	E/Q_E	F/Q_F	G/Q_G	H/Q_H	$Q_{A'}$	$Q_{H'}$
Clear	L	X	L	L	L	X	X	X	L	L	L	L	L	L	L	L	L	L
	L	L	X	L	L	X	X	X	L	L	L	L	L	L	L	L	L	L
	L	H	H	X	X	X	X	X	X	X	X	X	X	X	X	X	L	L
Hold	H	L	L	L	L	X	X	X	Q_{A0}	Q_{B0}	Q_{C0}	Q_{D0}	Q_{E0}	Q_{F0}	Q_{G0}	Q_{H0}	Q_{A0}	Q_{H0}
	H	X	X	L	L	L	X	X	Q_{A0}	Q_{B0}	Q_{C0}	Q_{D0}	Q_{E0}	Q_{F0}	Q_{G0}	Q_{H0}	Q_{A0}	Q_{H0}
Shift Right	H	L	H	L	L	↑	X	H	H	Q_{An}	Q_{Bn}	Q_{Cn}	Q_{Dn}	Q_{En}	Q_{Fn}	Q_{Gn}	H	Q_{Gn}
	H	L	H	L	L	↑	X	L	L	Q_{An}	Q_{Bn}	Q_{Cn}	Q_{Dn}	Q_{En}	Q_{Fn}	Q_{Gn}	L	Q_{Gn}
Shift Left	H	H	L	L	L	↑	H	X	Q_{Bn}	Q_{Cn}	Q_{Dn}	Q_{En}	Q_{Fn}	Q_{Gn}	Q_{Hn}	H	Q_{Bn}	H
	H	H	L	L	L	↑	L	X	Q_{Bn}	Q_{Cn}	Q_{Dn}	Q_{En}	Q_{Fn}	Q_{Gn}	Q_{Hn}	L	Q_{Bn}	L
Load	H	H	H	X	X	↑	X	X	a	b	c	d	e	f	g	h	a	h

NOTE: a...h=the level of the steady-state input at inputs A through H, respectively. This data is loaded into the flip-flops while the flip-flop outputsare isolated from the I/O terminals.
† When one or both output-enable inputs are high, the eight I/O terminals are disabled to the high-impedance state; however, sequential operationor clearing of the register is not affected.

RECOMMENDED OPERATING CONDITIONS

PARAMETER		MAX or MIN	LS	S	ALS	F	CD74 HC	CD74 HCT	CD74 AC	CD74 ACT	UNIT
I_{CC}		MAX	53	225	40	95	0.16	0.16	0.16	0.16	mA
I_{OH}	Q_A thru Q_H	MAX	-2.6	-6.5	-2.6	-3	-6	-4	-24	-24	mA
	$Q_{A'}$ or $Q_{H'}$		-0.4	-0.5	-0.4	-1	-4	-4	-24	-24	
I_{OL}	Q_A thru Q_H	MAX	24	20	24	24	6	4	24	24	mA
	$Q_{A'}$ or $Q_{H'}$		8	6	8	20	4	4	24	24	

SWITCHING CHARACTERISTICS

PARAMETER		INPUT	OUTPUT	MAX or MIN	LS	S	ALS	F	CD74 HC	CD74 HCT	CD74 AC	CD74 ACT
fmax				MIN	20	50	30	70	20	16	95	90
t_w	CLK high			MIN	30	10	16.5	7	24	30	5.2	5.5
	CLK low				10	10	16.5	7	24	30	5.2	5.5
	$\overline{CLR}$				20	10	10	7	15	22	5	5
t_{su}	DATA "H"			MIN	20	7	16	5.5	36	30	4.5	4.5
	DATA "L"				20	5	6	5.5	36	30	4.5	4.5
	SELECT				35	15	20	8.5	36	41	9	9
	$\overline{CLR}$ INACTIVE				20	10	15	7	-	-	-	-
t_h	DATA			MIN	0	5	0	2	0	0	0	0
	SELECT				10	5	0	0	0	0	0	0
t_{PLH}		CLK	$Q_{A'}$ or $Q_{B'}$	MAX	33	20	15	10	60	68	12.9	12.9
t_{PHL}					39	20	18	9.5	60	68	12.9	12.9
t_{PLH}		CLK	Q_A thru Q_H	MAX	25	21	13	10	60	68	13.5	14.5
t_{PHL}					39	21	19	12	60	68	13.5	14.5
t_{PHL}		$\overline{CLR}$	$Q_{A'}$ or $Q_{H'}$	MAX	40	21	22	10.5	60	69	11.2	12.2
t_{PHL}		$\overline{CLR}$	Q_A thru Q_H		40	24	22	15	60	69	13.9	18.6
t_{PZH}		$\overline{OE1}$, $\overline{OE2}$	Q_A thru Q_H	MAX	21	18	16	9	47	48	14.9	14.9
t_{PZL}					30	18	22	11	39	45	14.9	14.9
t_{PHZ}		$\overline{OE1}$, $\overline{OE2}$	Q_A thru Q_H	MAX	20	12	8	7	56	56	14.9	14.9
t_{PLZ}					15	12	15	6.5	47	48	14.9	14.9

UNIT fmax : MHz, other : ns

321

CRYSTAL-CONTROLLED OSCILLATOR

- Crystal-Controlled Oscillator Operation from 1MHz to 20MHz
- Complementary Outputs

Logic Diagram

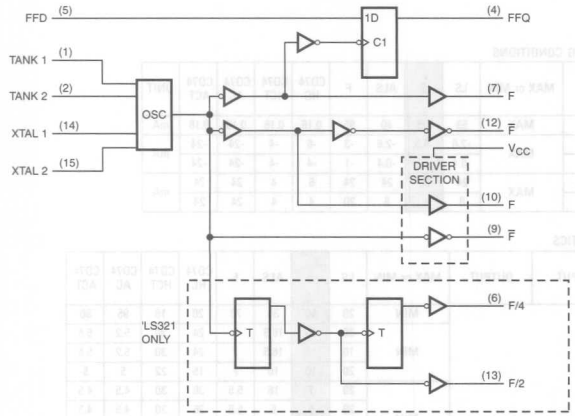

: OBSOLETED or NOT RECOMMENDED NEW DESIGNS

RECOMMENDED OPERATING CONDITIONS

PARAMETER		MAX or MIN	LS	UNIT
I_{CC}		MAX	75	mA
I_{OH}	F' or $\overline{F'}$	MAX	-24	mA
	F, $\overline{F}$, F/2, F/4	MAX	-0.4	mA
I_{OL}	F' or $\overline{F'}$	MAX	24	mA
	F, $\overline{F}$, F/2, F/4	MAX	8	mA

SWITCHING CHARACTERISTICS

PARAMETER	INPUT	OUTPUT	MAX or MIN	LS
fmax		F/2	MIN	10
		F/4	MAX	5
		ANY	MIN	20
tr		F',F'	MAX	14
		ANY	MAX	40
tf		F',F'	MAX	10
		ANY	MAX	20

UNIT fmax : MHz, other : ns

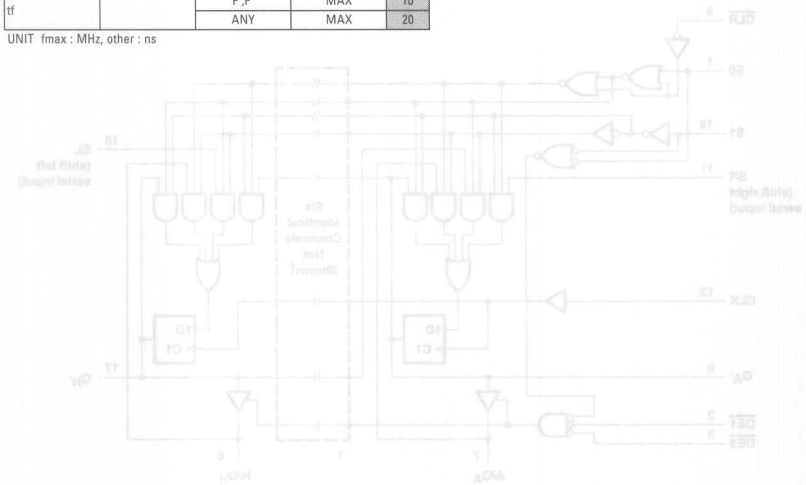

Hold (Store)
Shift Right
Shift Left
Load Data

- 3-State Outputs Drive Bus Lines Directly
- Can Be Cascaded for n-Bit Word Lengths

Logic Diagram

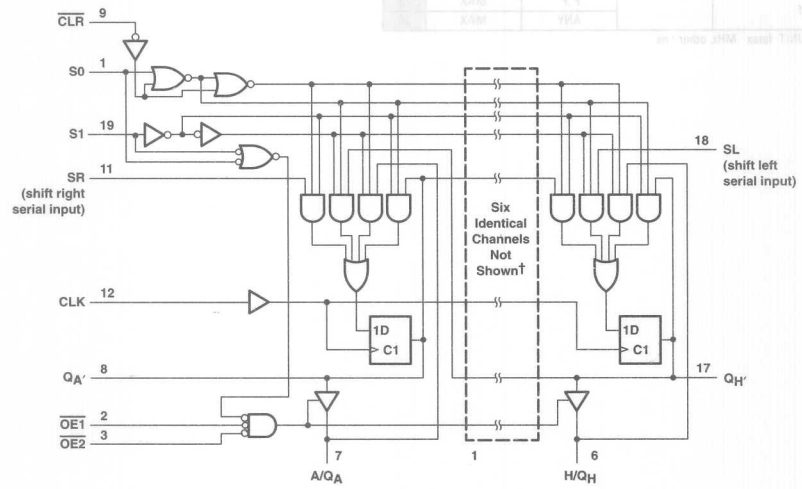

† I/O ports not shown: B/Q_B (13), C/Q_C (6), D/Q_D (14), E/Q_E (5), F/Q_F (15), and G/Q_G (4).

: OBSOLETED or NOT RECOMMENDED NEW DESIGNS

FUNCTION TABLE

MODE	INPUTS							I/O BORD								OUTPUTS	
	$\overline{CLR}$	SELECT		OUTPUT CONTROL		CLK	SEREAL		A/Q_A	B/Q_B	C/Q_C	C/Q_D	C/Q_E	C/Q_F	C/Q_G	H/Q_H	$Q_{A'}$	$Q_{H'}$
		S1	S0	$\overline{OE1}$†	$\overline{OE2}$†		SL	SR										
Clear	L	X	L	L	L	↑	X	X	L	L	L	L	L	L	L	L	L	L
	L	L	X	L	L	↑	X	X	L	L	L	L	L	L	L	L	L	L
Hold	H	L	L	L	L	X	X	X	Q_{A0}	Q_{B0}	Q_{C0}	Q_{D0}	Q_{E0}	Q_{F0}	Q_{G0}	Q_{H0}	Q_{A0}	Q_{H0}
	H	X	X	L	L	L	X	X	Q_{A0}	Q_{B0}	Q_{C0}	Q_{D0}	Q_{E0}	Q_{F0}	Q_{G0}	Q_{H0}	Q_{A0}	Q_{H0}
Shift Right	H	L	H	L	L	↑	X	H	H	Q_{An}	Q_{Bn}	Q_{Cn}	Q_{Dn}	Q_{En}	Q_{Fn}	Q_{Gn}	H	Q_{Gn}
	H	L	H	L	L	↑	X	L	L	Q_{An}	Q_{Bn}	Q_{Cn}	Q_{Dn}	Q_{En}	Q_{Fn}	Q_{Gn}	L	Q_{Gn}
Shift Left	H	H	L	L	L	↑	H	X	Q_{Bn}	Q_{Cn}	Q_{Dn}	Q_{En}	Q_{Fn}	Q_{Gn}	Q_{Hn}	H	Q_{Bn}	H
	H	H	L	L	L	↑	L	X	Q_{Bn}	Q_{Cn}	Q_{Dn}	Q_{En}	Q_{Fn}	Q_{Gn}	Q_{Hn}	L	Q_{Bn}	L
Load	H	H	H	X	X	↑	X	X	a	b	c	d	e	f	g	h	a	h

† a ...h=t he level of the steady-state input at inputs A through H, respectively. This data is loaded into the flip-flops while the flip-flop outputsare isolated from the I/O terminals.

RECOMMENDED OPERATING CONDITIONS

PARAMETER		MAX or MIN	LS	ALS	CD74 AC	CD74 ACT	UNIT
I_{CC}		MAX	225	40	0.16	0.16	mA
I_{OH}	$Q_{A'}$ or $Q_{H'}$	MAX	-0.5	-0.4	-24	-24	mA
	Q_A thru Q_H		-6.5	-2.6	-24	-24	mA
I_{OL}	$Q_{A'}$ or $Q_{H'}$	MAX	6	8	24	24	mA
	Q_A thru Q_H		20	24	24	24	mA

SWITCHING CHARACTERISTICS

PARAMETER		INPUT	OUTPUT	MAX or MIN	LS	ALS	CD74 AC	CD74 ACT
fmax				MIN	25	17	95	90
tw	CLK			MIN	30	16.5	5.2	5.5
	$\overline{CLR}$				20	-	5	5
tsu	DATA H			MIN	20	16	4.5	4.5
	DATA L				20	6	4.5	4.5
	SELECT				-	20	9	9
	$\overline{CLR}$				-	20	5.5	5.5
th	SELECT			MIN	-	0	0	0
	DATA				0	0	0	0
t_{PLH}		CLK	$Q_{A'}$ or $Q_{B'}$	MAX	33	15	12.9	12.9
t_{PHL}					39	18	12.9	12.9
t_{PLH}		CLK	Q_A thru Q_H	MAX	25	13	13.5	14.5
t_{PHL}					39	19	13.5	14.5
t_{PZH}		$\overline{OE1}$	Q_A thru Q_H	MAX	21	16	14.9	14.9
t_{PZL}					30	22	14.9	14.9
t_{PHZ}		$\overline{OE1}$	Q_A thru Q_H	MAX	20	8	14.9	14.9
t_{PLZ}					15	15	14.9	14.9
t_{PZH}		$\overline{OE2}$	Q_A thru Q_H	MAX	21	16	14.9	14.9
t_{PZL}					30	22	14.9	14.9
t_{PHZ}		$\overline{OE2}$	Q_A thru Q_H	MAX	20	8	14.9	14.9
t_{PLZ}					15	15	14.9	14.9

UNIT fmax : MHz, other : ns

PRODUCTION DATA information is current as of publication date. Products conform to specifications per the terms of Texas Instruments standard warranty. Production processing does not necessarily include testing of all parameters. See www.ti.com/sc/logic for the most current data sheets.

348

8-LINE TO 3-LINE PRIORITY ENCODER

- 3-State Outputs Drive Bus Lines Directly
- Encodes 8 Data Lines to 3-Line Binary (Octal)

Logic Diagram

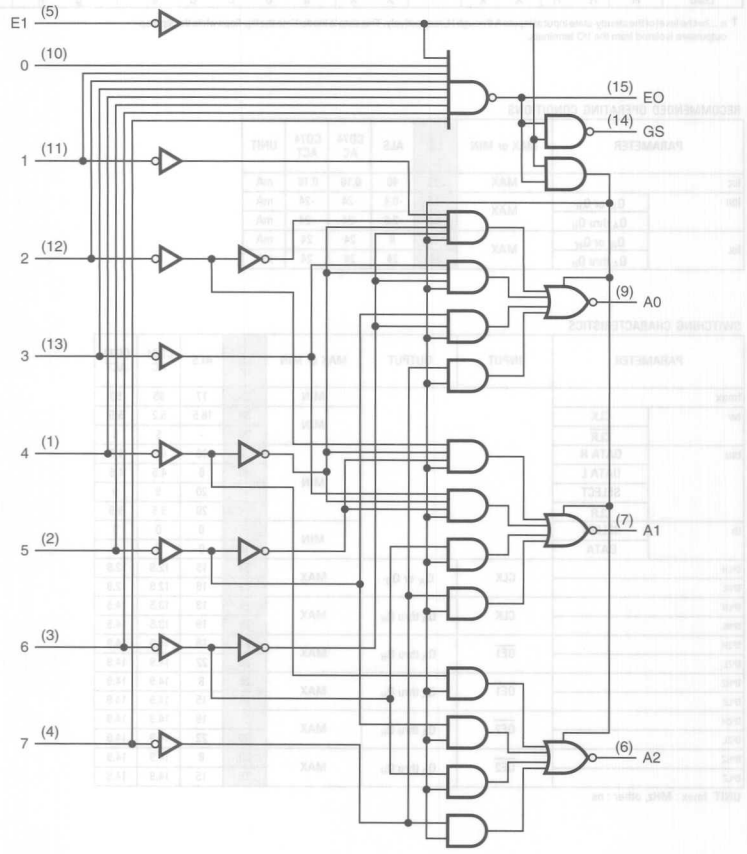

: OBSOLETED or NOT RECOMMENDED NEW DESIGNS

FUNCTION TABLE

INPUTS								OUTPUTS				
E1	0	1	2	3	4	5	6	7	A2	A1	A0	GS	E0
H	X	X	X	X	X	X	X	X	Z	Z	Z	H	H
L	H	H	H	H	H	H	H	H	Z	Z	Z	H	L
L	X	X	X	X	X	X	X	L	L	L	L	L	H
L	X	X	X	X	X	X	L	H	L	L	H	L	H
L	X	X	X	X	X	L	H	H	L	H	L	L	H
L	X	X	X	X	L	H	H	H	L	H	H	L	H
L	X	X	X	L	H	H	H	H	H	L	L	L	H
L	X	X	L	H	H	H	H	H	H	L	H	L	H
L	X	L	H	H	H	H	H	H	H	H	L	L	H
L	L	H	H	H	H	H	H	H	H	H	H	L	H

RECOMMENDED OPERATING CONDITIONS

PARAMETER		MAX or MIN	LS	UNIT
I_{CC}		MAX	25	mA
I_{OH}	A0, A1, A2	MAX	-2.6	mA
	E0, ES	MAX	-0.4	mA
I_{OL}	A0, A1, A2	MAX	24	mA
	E0, ES	MAX	8	mA

SWITCHING CHARACTERISTICS

PARAMETER	INPUT	OUTPUT	MAX or MIN	LS
t_{PLH}	1 to 7	A0, A1, A2	MAX	35
t_{PHL}			MAX	35
t_{PLH}	0 to 7	E0	MAX	18
t_{PHL}			MAX	40
t_{PLH}	0 to 7	GS	MAX	55
t_{PHL}			MAX	21

UNIT: ns

Logic Diagram

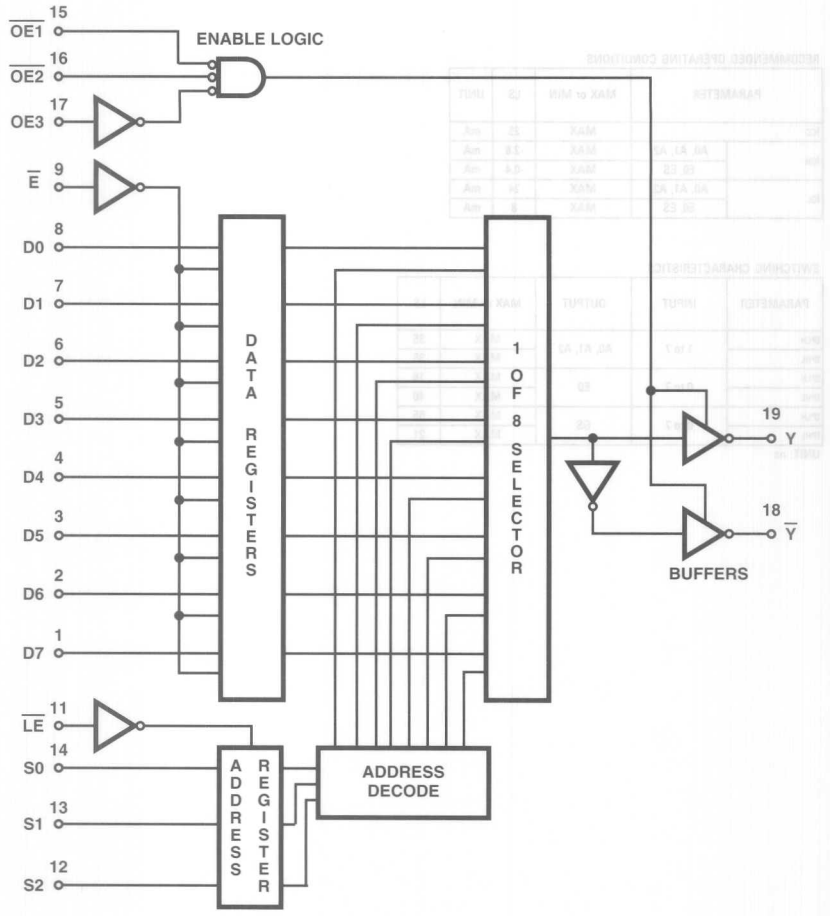

: OBSOLETED or NOT RECOMMENDED NEW DESIGNS

FUNCTION TABLE (SN74)

INPUTS							OUTPUTS	
SELECT†			$\overline{DC}$	OUTPUT ENABLES				
S2	S1	S0		$\overline{G1}$	$\overline{G2}$	G3	W	Y
X	X	X	X	H	X	X	Z	Z
X	X	X	X	X	H	X	Z	Z
X	X	X	X	X	X	L	Z	Z
L	L	L	L	L	L	H	$\overline{D0}$	D0
L	L	L	H	L	L	H	$\overline{D0}_n$	$D0_n$
L	L	H	L	L	L	H	$\overline{D1}$	D1
L	L	H	H	L	L	H	$\overline{D1}_n$	$D1_n$
L	H	L	L	L	L	H	$\overline{D2}$	D2
L	H	L	H	L	L	H	$\overline{D2}_n$	$D2_n$
L	H	H	L	L	L	H	$\overline{D3}$	D3
L	H	H	H	L	L	H	$\overline{D3}_n$	$D3_n$
H	L	L	L	L	L	H	$\overline{D4}$	D4
H	L	L	H	L	L	H	$\overline{D4}_n$	$D4_n$
H	L	H	L	L	L	H	$\overline{D5}$	D5
H	L	H	H	L	L	H	$\overline{D5}_n$	$D5_n$
H	H	L	L	L	L	H	$\overline{D6}$	D6
H	H	L	H	L	L	H	$\overline{D6}_n$	$D6_n$
H	H	H	L	L	L	H	$\overline{D7}$	D7
H	H	H	H	L	L	H	$\overline{D7}_n$	$D7_n$

NOTES:

H = High Voltage Level (Steady State), L = Low Voltage Level (Steady State), X = Don't Care, Z = High Impedance State (Off State), $D0_n$ ... $D7_n$ = the level of steady-state inputs D0 through D7, respectively, before the most recent low-to-high transition of data control.

† This column shows the input address setup with $\overline{LE}$ low.

TRUTH TABLE

INPUTS							OUTPUTS	
SELECT (NOTE 3)			ENABLE DATA	OUTPUT ENABLES				
S2	S1	S0	$\overline{E}$	$\overline{OE1}$	$\overline{OE2}$	OE3	$\overline{Y}$	Y
X	X	X	X	H	X	X	Z	Z
X	X	X	X	X	H	X	Z	Z
X	X	X	X	X	X	L	Z	Z
L	L	L	L	L	L	H	$\overline{D0}$	D0
L	L	L	H	L	L	H	$\overline{D0}_n$	$D0_n$
L	L	H	L	L	L	H	$\overline{D1}$	D1
L	L	H	H	L	L	H	$\overline{D1}_n$	$D1_n$
L	H	L	L	L	L	H	$\overline{D2}$	D2
L	H	L	H	L	L	H	$\overline{D2}_n$	$D2_n$
L	H	H	L	L	L	H	$\overline{D3}$	D3
L	H	H	H	L	L	H	$\overline{D3}_n$	$D3_n$
H	L	L	L	L	L	H	$\overline{D4}$	D4
H	L	L	H	L	L	H	$\overline{D4}_n$	$D4_n$
H	L	H	L	L	L	H	$\overline{D5}$	D5
H	L	H	H	L	L	H	$\overline{D5}_n$	D_n5
H	H	L	L	L	L	H	$\overline{D6}$	D6
H	H	L	H	L	L	H	$\overline{D6}_n$	$D6_n$

RECOMMENDED OPERATING CONDITIONS

PARAMETER	MAX or MIN	LS	SN74 HC	CD74 HC	SN74 HCT	UNIT
I_{CC}	MAX	46	0.08	0.16	0.16	mA
I_{OH}	MAX	-2.6	-6	-6	-4	mA
I_{OL}	MAX	24	6	6	4	mA

SWITCHING CHARACTERISTICS

PARAMETER	INPUT	OUTPUT	MAX or MIN	LS	SN74 HC	CD74 HC	SN74 HCT
t_{su}			MAX	15	19	15	15
t_h			MAX	15	5	14	14
t_{PLH}	D0 thru D7	Y	MAX	36	59	63	71
t_{PHL}			MAX	35	59	63	71
t_{PLH}	D0 thru D7	W (CD74: $\overline{Y}$)	MAX	27	59	63	71
t_{PHL}			MAX	44	59	63	71
t_{PLH}	$\overline{DC}$ (CD74: $\overline{E}$)	Y	MAX	42	68	75	81
t_{PHL}			MAX	39	68	75	81
t_{PLH}	$\overline{DC}$ (CD74: $\overline{E}$)	W (CD74: $\overline{Y}$)	MAX	33	68	75	81
t_{PHL}			MAX	50	68	75	81

UNIT:ns

PRODUCTION DATA information is current as of publication date. Products conform to specifications per the terms of Texas Instruments standard warranty. Production processing does not necessarily include testing of all parameters. See www.ti.com/sc/logic for the most current data sheets.

SYNCHRONOUS UP/DOWN DECADE COUNTER

Logic Diagram

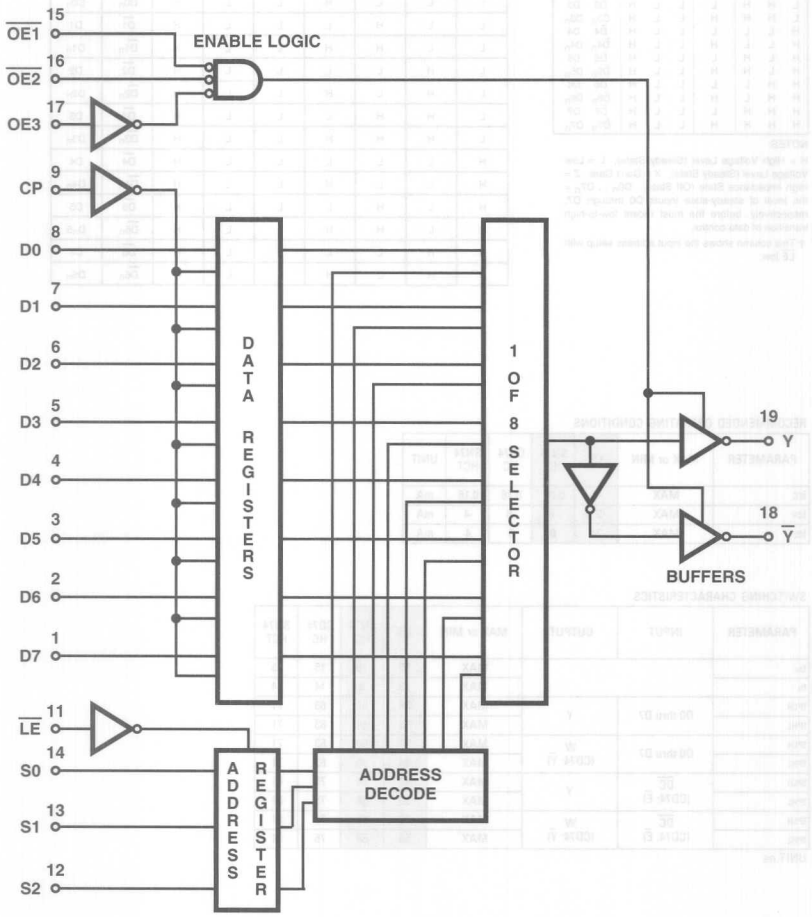

: OBSOLETED or NOT RECOMMENDED NEW DESIGNS

FUNCTION TABLE (SN74)

INPUTS							OUTPUTS	
SELECT†			CLK	OUTPUT ENABLES				
C2	C1	C0		$\overline{G1}$	$\overline{G2}$	G3	W	Y
X	X	X	X	H	X	X	Z	Z
X	X	X	X	X	H	X	Z	Z
X	X	X	X	X	X	L	Z	Z
L	L	L	↑	L	L	H	$\overline{D0}$	D0
L	L	L	H or L	L	L	H	$\overline{D0}_n$	$D0_n$
L	L	H	↑	L	L	H	$\overline{D1}$	D1
L	L	H	H or L	L	L	H	$\overline{D1}_n$	$D1_n$
L	H	L	↑	L	L	H	$\overline{D2}$	D2
L	H	L	H or L	L	L	H	$\overline{D2}_n$	$D2_n$
L	H	H	↑	L	L	H	$\overline{D3}$	D3
L	H	H	H or L	L	L	H	$\overline{D3}_n$	$D3_n$
H	L	L	↑	L	L	H	$\overline{D4}$	D4
H	L	L	H or L	L	L	H	$\overline{D4}_n$	$D4_n$
H	L	H	↑	L	L	H	$\overline{D5}$	D5
H	L	H	H or L	L	L	H	$\overline{D5}_n$	$D5_n$
H	H	L	↑	L	L	H	$\overline{D6}$	D6
H	H	L	H or L	L	L	H	$\overline{D6}_n$	$D6_n$
H	H	H	↑	L	L	H	$\overline{D7}$	D7
H	H	H	H or L	L	L	H	$\overline{D7}_n$	$D7_n$

NOTES:

H = High Voltage Level (Steady State), L = Low Voltage Level (Steady State), ↑ = Transition form Low to High Level, X = Don't Care, Z = High Impedance State (Off State), $D0_n$ ... $D7_n$ = the level of steady-state inputs D0 through D7, respectively, before the most recent low-to-high transition of data control.

† This column shows the input address setup with $\overline{LE}$ low.

TRUTH TABLE

INPUTS							OUTPUTS	
SELECT (NOTE 3)			CLOCK	OUTPUT ENABLES				
S2	S1	S0	CP	$\overline{OE1}$	$\overline{OE2}$	OE3	$\overline{Y}$	Y
X	X	X	X	H	X	X	Z	Z
X	X	X	X	X	H	X	Z	Z
X	X	X	X	X	X	L	Z	Z
L	L	L	↑	L	L	H	$\overline{D0}$	D0
L	L	L	H or L	L	L	H	$\overline{D0}_n$	$D0_n$
L	L	H	↑	L	L	H	$\overline{D1}$	D1
L	L	H	H or L	L	L	H	$\overline{D1}_n$	$D1_n$
L	H	L	↑	L	L	H	$\overline{D2}$	D2
L	H	L	H or L	L	L	H	$\overline{D2}_n$	$D2_n$
L	H	H	↑	L	L	H	$\overline{D3}$	D3
L	H	H	H or L	L	L	H	$\overline{D3}_n$	$D3_n$
H	L	L	↑	L	L	H	$\overline{D4}$	D4
H	L	L	H or L	L	L	H	$\overline{D4}_n$	$D4_n$
H	L	H	↑	L	L	H	$\overline{D5}$	D5
H	L	H	H or L	L	L	H	$\overline{D5}_n$	$D5_n$
H	H	L	↑	L	L	H	$\overline{D6}$	D6
H	H	L	H or L	L	L	H	$\overline{D6}_n$	$D6_n$

RECOMMENDED OPERATING CONDITIONS

PARAMETER	MAX or MIN	LS	SN74 HC	CD74 HCT	UNIT
I_{CC}	MAX	46	0.08	0.16	mA
I_{OH}	MAX	-2.6	-6	-4	mA
I_{OL}	MAX	24	6	4	mA

SWITCHING CHARACTERISTICS

PARAMETER	INPUT	OUTPUT	MAX or MIN	LS	SN74 HC	CD74 HCT
t_{su}	D0 thru D7		MIN	15	19	11
t_h	D0 thru D7		MIN	0	5	14
t_{PLH}	CLK	Y	MAX	27	64	77
t_{PHL}				50	64	77
t_{PLH}	CLK	W (CD74 : $\overline{Y}$)	MAX	36	64	77
t_{PHL}				27	64	77
t_{PLH}	S0, S1, S2	Y	MAX	45	71	89
t_{PHL}				48	71	89
t_{PLH}	S0, S1, S2	W (CD74 : $\overline{Y}$)	MAX	54	71	89
t_{PHL}				45	71	89

UNIT: ns

PRODUCTION DATA information is current as of publication date. Products conform to specifications per the terms of Texas Instruments standard warranty. Production processing does not necessarily include testing of all parameters. See www.ti.com/sc/logic for the most current data sheets.

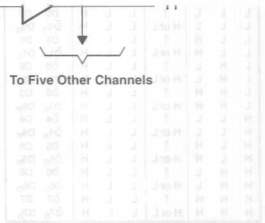

RECOMMENDED OPERATING CONDITIONS

PARAMETER	MAX or MIN	TTL	LS	SN74 HC	CD74 HC	CD74 HCT	UNIT
I_{CC}	MAX	85	24	0.08	0.16	0.16	mA
I_{OH}	MAX	-5.2	-2.6	-6	-6	-4	mA
I_{OL}	MAX	32	24	6	6	4	mA

SWITCHING CHARACTERISTICS

PARAMETER	INPUT	OUTPUT	MAX or MIN	TTL	LS	SN74 HC	CD74 HC	CD74 HCT
t_{PLH}	A	Y	MAX	16	15	24	32	38
t_{PHL}			MAX	22	18	24	32	38
t_{PZH}	$\overline{G}$	Y	MAX	35	35	48	45	53
t_{PZL}			MAX	37	45	48	45	53
t_{PHZ}	$\overline{G}$	Y	MAX	11	32	48	45	53
t_{PLZ}			MAX	27	35	48	45	53

UNIT: ns

: OBSOLETED or NOT RECOMMENDED NEW DESIGNS

HEX BUS DRIVERS HEX BUFFERS/LINE DRIVERS 3-STATE

Logic Diagram

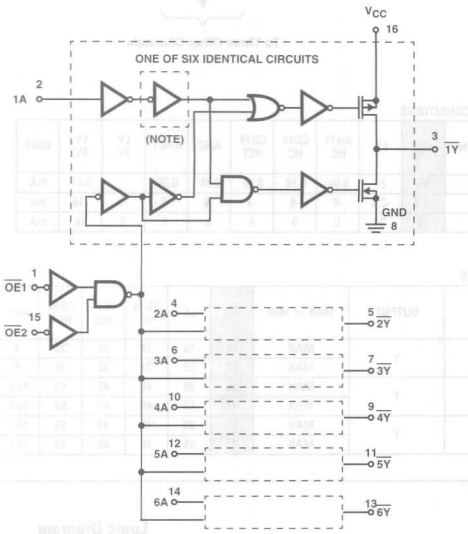

NOTE: Inverter not included in HC/HCT365.

FIGURE 1. LOGIC DIAGRAM FOR THE HC/HCT365 AND HC366 (OUTPUTS FOR HC/HCT365 ARE COMPLEMENTS OF THOSE SHOWN, i.e., 1Y, 2Y, ETC.)

FUNCTION TABLE

INPUTS			OUTPUT
$\overline{G1}$	$\overline{G2}$	A	Y
L	L	L	H
L	L	H	L
X	H	X	Z
H	X	X	Z

NOTES:
H = High Voltage Level
L = Low Voltage Level
X = Don't Care
Z = High Ompedance (OFF) State

RECOMMENDED OPERATING CONDITIONS

PARAMETER	MAX or MIN	TTL	LS	SN74 HC	CD74 HC	UNIT
I_{CC}	MAX	77	21	0.08	160	mA
I_{OH}	MAX	-5.2	-2.6	-6	-6	mA
I_{OL}	MAX	32	24	6	6	mA

SWITCHING CHARACTERISTICS

PARAMETER	INPUT	OUTPUT	MAX or MIN	TTL	LS	SN74 HC	CD74 HC
t_{PLH}	A	Y (CD74 : $\overline{Y}$)	MAX	17	15	24	33
t_{PHL}			MAX	16	18	24	33
t_{PZH}	$\overline{G}$ (CD74 : $\overline{OE}$)	Y (CD74 : $\overline{Y}$)	MAX	35	35	48	45
t_{PZL}			MAX	37	45	48	45
t_{PHZ}	$\overline{G}$ (CD74 : $\overline{OE}$)	Y (CD74 : $\overline{Y}$)	MAX	11	32	48	45
t_{PLZ}			MAX	27	35	48	45

UNIT:ns

PRODUCTION DATA information is current as of publication date. Products conform to specifications per the terms of Texas Instruments standard warranty. Production processing does not necessarily include testing of all parameters. See www.ti.com/sc/logic for the most current data sheets.

367

HEX BUS DRIVERS

Logic Diagram

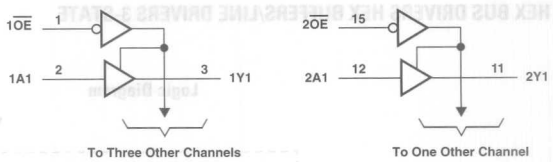

RECOMMENDED OPERATING CONDITIONS

PARAMETER	MAX or MIN	TTL	LS	SN74 HC	CD74 HC	CD74 HCT	AHC	AHCT	LV 3V	LV 5V	UNIT
I_{CC}	MAX	85	24	0.08	0.16	0.16	0.04	0.04	-	0.02	mA
I_{OH}	MAX	-5.2	-2.6	-6	-6	-4	-8	-8	-8	-16	mA
I_{OL}	MAX	32	24	6	6	4	8	8	8	16	mA

SWITCHING CHARACTERISTICS

PARAMETER	INPUT	OUTPUT	MAX or MIN	TTL	LS	SN74 HC	CD74 HC	CD74 HCT	AHC	AHCT	LV 3V	LV 5V
t_{PLH}	A	Y	MAX	16	16	24	32	38	9	6.5	13.5	9
t_{PHL}			MAX	22	22	24	32	38	9	6.5	13.5	9
t_{PZH}	$\overline{G}$	Y	MAX	35	35	48	45	53	10.5	9.5	16	10.5
t_{PZL}			MAX	47	40	48	45	53	10.5	8.5	16	10.5
t_{PHZ}	$\overline{G}$	Y	MAX	11	30	48	45	53	10.5	9.5	15.5	10.5
t_{PLZ}			MAX	27	35	48	45	53	10.5	8.5	15.5	10.5

UNIT: ns

368

HEX BUS DRIVERS

Logic Diagram

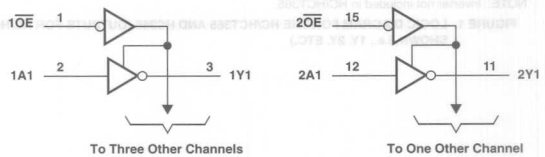

RECOMMENDED OPERATING CONDITIONS

PARAMETER	MAX or MIN	TTL	LS	SN74 HC	CD74 HC	CD74 HCT	UNIT
I_{CC}	MAX	77	21	0.08	0.16	0.16	mA
I_{OH}	MAX	-5.2	-2.6	-6	-6	-4	mA
I_{OL}	MAX	32	24	6	6	4	mA

SWITCHING CHARACTERISTICS

PARAMETER	INPUT	OUTPUT	MAX or MIN	TTL	LS	SN74 HC	CD74 HC	CD74 HCT
t_{PLH}	A	Y	MAX	17	15	24	32	45
t_{PHL}			MAX	16	18	24	32	45
t_{PZH}	$\overline{G}$	Y	MAX	35	35	48	45	53
t_{PZL}			MAX	37	45	48	45	53
t_{PHZ}	$\overline{G}$	Y	MAX	11	32	48	45	53
t_{PLZ}			MAX	27	35	48	45	53

UNIT: ns

: OBSOLETED or NOT RECOMMENDED NEW DESIGNS

373

OCTAL D-TYPE LATCHES

- 3-State Bus-Driving True Outputs
- Buffered Control Inputs
- 74AC11xxx: Product Available in Reduced-Noise Advanced CMOS (11000 Series)
- 74ACT11xxx: Product Available in Reduced-Noise Advanced CMOS (11000 Series)

Logic Diagram

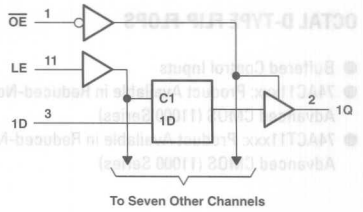

FUNCTION TABLE

OUTPUT CONTROL	INPUTS		OUTPUT Q
	LE	D	
L	H	H	H
L	H	L	L
L	L	X	Q0
H	X	X	Z

RECOMMENDED OPERATING CONDITIONS

PARAMETER	MAX or MIN	LS	S	ALS	AS	F	SN74 HC	CD74 HC	SN74 HCT	CD74 HCT	SN74 BCT	ABT	LVTH	UNIT
I_{CC}	MAX	40	190	27	100	55	0.08	0.16	0.08	0.16	60	30	5	mA
I_{OH}	MAX	-2.6	-6.5	-2.6	-15	-3	-6	-6	-6	-6	-15	-32	-32	mA
I_{OL}	MAX	24	20	24	48	24	6	6	6	6	64	64	64	mA

PARAMETER	MAX or MIN	AC 11	SN74 AC	CD74 AC	ACT 11	SN74 ACT	CD74 ACT	AHC	AHCT	LV 3V	LV 5V	LVC 3V	ALVCH 3V	UNIT
I_{CC}	MAX	0.08	0.04	0.16	0.08	0.04	0.16	0.04	0.04	-	0.02	0.01	0.02	mA
I_{OH}	MAX	-24	-24	-24	-24	-24	-24	-8	-8	-8	-16	-24	-24	mA
I_{OL}	MAX	24	24	24	24	24	24	8	8	8	16	24	24	mA

SWITCHING CHARACTERISTICS

PARAMETER		INPUT	OUTPUT	MAX or MIN	LS	S	ALS	AS	F	SN74 HC	CD74 HC	SN74 HCT	CD74 HCT	SN74 BCT	ABT	LVTH
tw	High			MIN	15	6	10	4.5	6	20	24	25	24	7.5	3.3	3
	Low			MIN	15	7.3	-	-	-	-	-	-	-	-	-	-
tsu				MIN	5	0	10	2	2	13	15	13	20	2	1.9	1.1
th				MIN	20	10	7	3	3	12	5	10	15	5.5	1	1.4
t_{PLH}		D	Q	MAX	18	12	12	6	8	38	45	44	48	9.3	5.9	3.9
t_{PHL}				MAX	18	12	16	6	6	38	45	44	48	9.5	6.2	3.9
t_{PLH}		LE	Q	MAX	30	14	22	11.5	13	44	53	44	53	9.3	6.6	4.2
t_{PHL}				MAX	30	18	23	7.5	8	44	53	44	53	8.8	7.2	4.2
t_{PZH}		$\overline{OE}$	Q	MAX	28	15	18	6.5	12	38	45	44	53	11.8	5.2	4.8
t_{PZL}				MAX	36	18	20	9.5	8.5	38	45	44	53	12	6.7	4.8
t_{PHZ}		$\overline{OE}$	Q	MAX	25	9	10	6.5	7.5	38	45	44	53	7	6.9	4.6
t_{PLZ}				MAX	20	12	12	7	6	38	45	44	53	7.4	6.5	4.5

PARAMETER		INPUT	OUTPUT	MAX or MIN	AC 11	SN74 AC	CD74 AC	ACT 11	SN74 ACT	CD74 ACT	AHC	AHCT	LV 3V	LV 5V	LVC 3V	ALVCH 3V
tw	High			MIN	4	4.5	4	5	8	4	5	6.5	5	5	3.3	3.3
	Low			MIN	-	-	4	-	-	4	-	-	-	-	-	-
tsu				MIN	3.5	4.5	2	3.5	8	2	4	1.5	4	4	2	0.5
th				MIN	2	1	3	3.5	1	3	1	3.5	1	1	1.5	1.2
t_{PLH}		D	Q	MAX	10.3	10.5	8.5	11.8	11.5	10.4	10.5	10.5	17	10.5	6.8	3.6
t_{PHL}				MAX	8.4	10.5	8.5	10	11.5	10.4	10.5	10.5	17	10.5	6.8	3.6
t_{PLH}		LE	Q	MAX	11.3	10.5	12	13	11.5	12.5	10.5	14.5	16.5	10.5	7.6	3.3
t_{PHL}				MAX	10.2	10.5	12	12.2	11.5	12.5	10.5	14.5	16.5	10.5	7.6	3.3
t_{PZH}		$\overline{OE}$	Q	MAX	10.8	9.5	10.5	12.5	10.5	13.5	11.5	13.5	17	11.5	7.7	4.8
t_{PZL}				MAX	9.7	9.5	10.5	12	10.5	13.5	11.5	13.5	17	11.5	7.7	4.8
t_{PHZ}		$\overline{OE}$	Q	MAX	11.1	12.5	11.5	12.2	12.5	12.5	10.5	12	15	10.5	7	4.4
t_{PLZ}				MAX	8.7	10	11.5	10.1	10	12.5	10.5	12	15	10.5	7	4.4

UNIT fmax : MHz, other : ns

PRODUCTION DATA information is current as of publication date. Products conform to specifications per the terms of Texas Instruments standard warranty. Production processing does not necessarily include testing of all parameters. See www.ti.com/sc/logic for the most current data sheets.

374

- 74ACT11xxx: Product Available in Reduced-Noise Advanced CMOS (11000 Series)

Logic Diagram

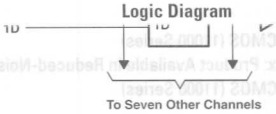

FUNCTION TABLE

OUTPUT CONTROL	INPUTS		OUTPUT Q
	CLK	D	
L	↑	H	H
L	↑	L	L
L	L	X	Q0
H	X	X	Z

RECOMMENDED OPERATING CONDITIONS

PARAMETER	MAX or MIN	LS	S	ALS	AS	F	SN74 HC	CD74 HC	SN74 HCT	CD74 HCT	SN74 BCT	ABT	LVTH 3V	UNIT
I_{CC}	MAX	40	160	31	128	86	0.08	0.16	0.08	0.16	60	30	5	mA
I_{OH}	MAX	-2.6	-6.5	-2.6	-15	-3	-6	-6	-6	-6	-15	-32	-32	mA
I_{OL}	MAX	24	20	24	48	24	6	6	6	6	64	64	64	mA

PARAMETER	MAX or MIN	AC 11	SN74 AC	CD74 AC	ACT 11	SN74 ACT	CD74 ACT	AHC	AHCT	LV 3V	LV 5V	LVC 3V	ALVCH 3V	UNIT
I_{CC}	MAX	0.08	0.04	0.16	0.08	0.04	0.16	0.04	0.04	-	0.02	0.01	0.01	mA
I_{OH}	MAX	-24	-24	-24	-24	-24	-24	-8	-8	-8	-16	-24	-24	mA
I_{OL}	MAX	24	24	24	24	24	24	8	8	8	16	24	24	mA

SWITCHING CHARACTERISTICS

PARAMETER		INPUT	OUTPUT	MAX or MIN	LS	S	ALS	AS	F	SN74 HC	CD74 HC	SN74 HCT	CD74 HCT	SN74 BCT	ABT	LVTH 3V
f_{max}				MIN	35	75	35	125	70	24	20	25	20	70	150	150
t_w	High			MIN	15	6	14	4	7	20	24	20	24	7	3.3	3.3
	Low			MIN	15	7.3	14	3	6	20	24	20	24	-	3.3	3.3
t_{su}				MIN	20	5	10	2	2	25	18	25	18	6.5	1.9	1.5
t_h				MIN	0	2	0	2	2	5	5	10	5	0	2.1	0.8
t_{PLH}		CLK	Q	MAX	28	15	12	8	10	45	50	45	50	10.6	6.2	4.5
t_{PHL}				MAX	28	17	16	9	10	45	50	45	50	10	7.1	4.2
t_{PZH}		$\overline{OE}$	Q	MAX	26	15	17	6	12.5	38	45	38	42	12.3	5.2	4.7
t_{PZL}				MAX	28	18	18	10	8.5	38	45	38	42	12.7	6.7	4.7
t_{PHZ}		$\overline{OE}$	Q	MAX	28	9	10	6	8	38	41	38	45	6.8	6.7	4.6
t_{PLZ}				MAX	20	12	18	6	6.5	38	41	38	45	6.8	6.5	4.5

PARAMETER		INPUT	OUTPUT	MAX or MIN	AC 11	SN74 AC	CD74 AC	ACT 11	SN74 ACT	CD74 ACT	AHC	AHCT	LV 3V	LV 5V	LVC 3V	ALVCH 3V
f_{max}				MIN	95	100	12.5	55	90	110	75	75	50	75	100	150
t_w	High			MIN	5	4.5	4	9	5	4.5	5	6.5	5.5	5	3.3	3.3
	Low			MIN	5	4.5	4	9	5	4.5	5	6.5	5.5	5	3.3	3.3
t_{su}				MIN	2.5	4.5	2	3	5.5	2	3	2.5	4.5	3	2	1.8
t_h				MIN	3.5	1.5	2	5.5	1.5	3	2	2.5	2	2	1.5	0.5
t_{PLH}		CLK	Q	MAX	10.2	10.5	10.8	12.4	11.5	11.2	11.5	11.5	18.5	11.5	7	3.6
t_{PHL}				MAX	10.1	10	10.8	13	11	11.2	11.5	11.5	18.5	11.5	7	3.6
t_{PZH}		$\overline{OE}$	Q	MAX	9.1	9.5	14.5	12.3	10.5	14.5	11	12.5	16.5	11	7.5	5.2
t_{PZL}				MAX	9.4	9.5	14.5	12.3	10.5	14.5	11	12.5	16.5	11	7.5	5.2
t_{PHZ}		$\overline{OE}$	Q	MAX	11.2	12.5	14.5	13.2	12.5	14.5	10	12	16	10	6.5	4.5
t_{PLZ}				MAX	9.2	10	14.5	10.8	10	14.5	10	12	16	10	6.5	4.5

UNIT fmax : MHz, other : ns

: OBSOLETED or NOT RECOMMENDED NEW DESIGNS

375

4-BIT BISTABLE LATCHES

- Complementary Outputs (Q, $\overline{Q}$)

Logic Diagram

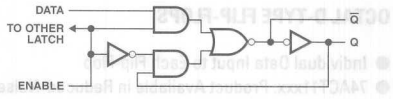

FUNCTION TABLE

INPUTS		OUTPUTS Q	
D	C		
L	H	L	H
H	H	H	L
X	L	Q_0	$\overline{Q}_0$

RECOMMENDED OPERATING CONDITIONS

PARAMETER	MAX or MIN	LS	SN74 HC	UNIT
I_{CC}	MAX	12	0.04	mA
I_{OH}	MAX	-0.4	-4	mA
I_{OL}	MAX	8	4	mA

SWITCHING CHARACTERISTICS

PARAMETER	INPUT	OUTPUT	MAX or MIN	LS	SN74 HC
t_W			MIN	20	20
t_{SU}			MIN	20	25
t_h			MIN	0	5
t_{PLH}	D	Q	MAX	27	30
t_{PHL}			MAX	17	30
t_{PLH}	D	$\overline{Q}$	MAX	20	30
t_{PHL}			MAX	15	30
t_{PLH}	C	Q	MAX	27	33
t_{PHL}			MAX	25	33
t_{PLH}	C	$\overline{Q}$	MAX	30	33
t_{PHL}			MAX	15	33

UNIT: ns

PRODUCTION DATA information is current as of publication date. Products conform to specifications per the terms of Texas Instruments standard warranty. Production processing does not necessarily include testing of all parameters. See www.ti.com/sc/logic for the most current data sheets.

377

OCTAL D-TYPE FLIP-FLOPS

- Individual Data Input to Each Flip-Flop
- 74ACT11xxx: Product Available in Reduced-Noise Advanced CMOS (11000 Series)

Logic Diagram

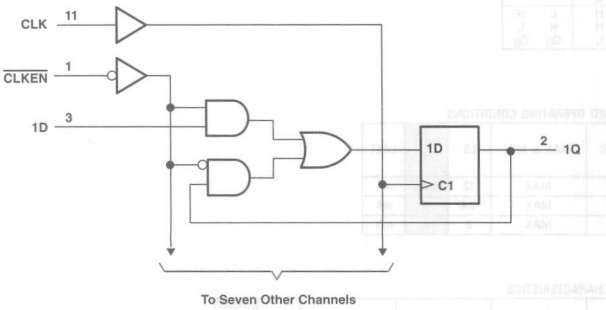

FUNCTION TABLE

INPUTS			OUTPUTS	
$\overline{CLKEN}$	CLOCK	DATA	Q	$\overline{Q}$
H	X	X	Q_0	$\overline{Q}_0$
L	↑	H	H	L
L	↑	L	L	H
X	L	X	Q_0	$\overline{Q}_0$

RECOMMENDED OPERATING CONDITIONS

PARAMETER	MAX or MIN	LS	F	SN74 HC	CD74 HC	SN74 HCT	CD74 HCT	ABT	AC 11	UNIT
I_{CC}	MAX	28	90	0.08	0.16	0.08	0.16	30	0.08	mA
I_{OH}	MAX	-0.4	-1	-4	-4	-4	-4	-32	-24	mA
I_{OL}	MAX	8	20	4	4	4	4	64	24	mA

SWITCHING CHARACTERISTICS

PARAMETER		INPUT	OUTPUT	MAX or MIN	LS	F	SN74 HC	CD74 HC	SN74 HCT	CD74 HCT	ABT	AC 11
fmax				MIN	30	110	20	20	17	16	150	100
tw				MIN	20	5	25	24	25	30	3.3	5
tsu	DATA			MIN	20	2	25	18	15	18	2.5	4
	$\overline{CLKEN}$ ACTIVE			MIN	25	2.5	25	-	15	-	3	6
	$\overline{CLKEN}$ INACTIVE			MIN	10	4.5	25	18	15	18	3	6
th				MIN	5	1	5	3	3	3	1.8	0
t_{PLH}		CLK	Q	MAX	27	10	40	53	45	57	6.5	11.3
t_{PHL}				MAX	27	10.5	40	53	45	57	7.3	12.9

UNIT fmax : MHz, other : ns

: OBSOLETED or NOT RECOMMENDED NEW DESIGNS

HEX D-TYPE FLIP-FROPS

Logic Diagram

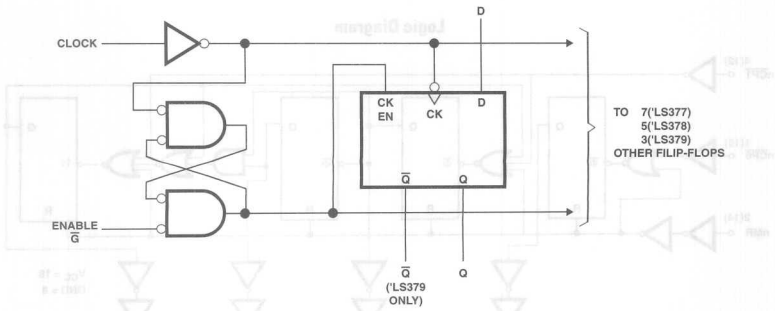

FUNCTION TABLE

INPUTS			OUTPUTS	
Ḡ	CLOCK	DATA	Q	Q̄
H	X	X	Q_0	$\bar{Q}_0$
L	↑	H	H	L
L	↑	L	L	H
X	L	X	Q_0	$\bar{Q}_0$

RECOMMENDED OPERATING CONDITIONS

PARAMETER	MAX or MIN	LS	F	SN74 HC	UNIT
I_{CC}	MAX	22	45	0.08	mA
I_{OH}	MAX	-0.4	-1	-4	mA
I_{OL}	MAX	8	20	4	mA

SWITCHING CHARACTERISTICS

PARAMETER		INPUT	OUTPUT	MAX or MIN	LS	F	SN74 HC
fmax				MIN	30	110	20
tw	CLK H			MIN	20	4	25
	CLK L			MIN	20	6	25
tsu	DATA			MIN	20	5	25
	Ḡ ACTIVE			MIN	25	3.5	25
	Ḡ INACTIVE			MIN	10	5	25
th				MIN	5 ↑	0	5
t_{PLH}		CLK	Q	MAX	27	6.7	40
t_{PHL}				MAX	27	6.1	40

UNIT fmax : MHz, other : ns

PRODUCTION DATA information is current as of publication date. Products conform to specifications per the terms of Texas Instruments standard warranty. Production processing does not necessarily include testing of all parameters. See www.ti.com/sc/logic for the most current data sheets.

- Typical maximum Count Frequency: 35MHz
- Buffered Outputs Reduce Possibility of Collector Commutation

Logic Diagram

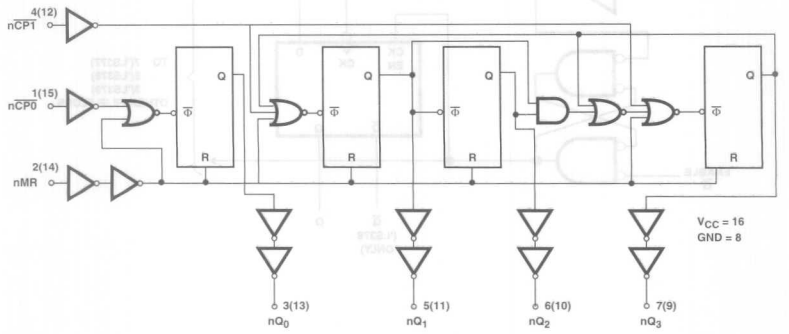

FUNCTION TABLE

BCD COUNT SEQUENCE

COUNT	OUTPUTS			
	Q_D	Q_C	Q_B	Q_A
0	L	L	L	L
1	L	L	L	H
2	L	L	H	L
3	L	L	H	H
4	L	H	L	L
5	L	H	L	H
6	L	H	H	L
7	L	H	H	H
8	H	L	L	L
9	H	L	L	H

BI-QUINARY

COUNT	OUTPUTS			
	Q_A	Q_D	Q_C	Q_B
0	L	L	L	L
1	L	L	L	H
2	L	L	H	L
3	L	L	H	H
4	L	H	L	L
5	H	L	L	L
6	H	L	L	H
7	H	L	H	L
8	H	L	H	H
9	H	H	L	L

RECOMMENDED OPERATING CONDITIONS

PARAMETER	MAX or MIN	TTL	LS	SN74 HC	CD74 HC	CD74 HCT	UNIT
I_{CC}	MAX	69	26	0.08	0.16	0.16	mA
I_{OH}	MAX	-0.8	-0.4	-4	-4	-4	mA
I_{OL}	MAX	16	8	4	4	4	mA

SWITCHING CHARACTERISTICS

PARAMETER		INPUT	OUTPUT	MAX or MIN	TTL	LS	SN74 HC	CD74 HC	CD74 HCT
fmax		A	QA	MIN	25	25	25	20	18
		B	QB	MIN	20	12.5	25	20	18
tw	A			MIN	20	20	20	24	29
	B			MIN	25	40	20	24	29
	CLR H			MIN	20	20	20	15	20
tsu				MIN	25	25	5	-	-
tPLH		A	QA	MAX	20	20	30	53	60
tPHL				MAX	20	20	30	53	60
tPLH		A	QC	MAX	60	60	72	-	126
tPHL				MAX	60	60	72	-	126
tPLH		B	QB	MAX	21	21	33	56	65
tPHL				MAX	21	21	33	56	65
tPLH		B	QC	MAX	39	39	46	74	83
tPHL				MAX	39	39	46	74	83
tPLH		B	QD	MAX	21	21	33	54	63
tPHL				MAX	21	21	33	54	63
tPHL		CLR	Q	MAX	39	39	41	57	63

UNIT fmax : MHz, other : ns

: OBSOLETED or NOT RECOMMENDED NEW DESIGNS

393

DUAL 4-BIT BINARY COUNTERS

- Dual 4-Bit Binary Counter with Individual Clock
- All Have Direct Clear for Each 4-Bit Counter
- Typical maximum Count Frequency: 35MHz
- Buffered Outputs Reduce Possibility of Collector Commutation

Logic Diagram

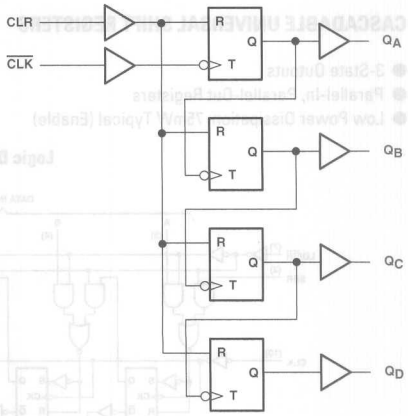

FUNCTION TABLE

COUNT	INPUTS			
	Q_D	Q_C	Q_B	Q_A
0	L	L	L	L
1	L	L	L	H
2	L	L	H	L
3	L	L	H	H
4	L	H	L	L
5	L	H	L	H
6	L	H	H	L
7	L	H	H	H
8	H	L	L	L
9	H	L	L	H
10	H	L	H	L
11	H	L	H	H
12	H	H	L	L
13	H	H	L	H
14	H	H	H	L
15	H	H	H	H

RECOMMENDED OPERATING CONDITIONS

PARAMETER	MAX or MIN	TTL	LS	SN74 HC	CD74 HC	CD74 HCT	LV 3V	LV 5V	UNIT
I_{CC}	MAX	64	26	0.08	0.16	0.16	-	0.02	mA
I_{OH}	MAX	-0.8	-0.4	-4	-4	-4	-6	-12	mA
I_{OL}	MAX	16	8	4	4	4	6	12	mA

SWITCHING CHARACTERISTICS

PARAMETER		INPUT	OUTPUT	MAX or MIN	TTL	LS	SN74 HC	CD74 HC	CD74 HCT	LV 3V	LV 5V
fmax				MIN	25	25	25	20	18	35	75
tw	A			MIN	20	20	20	24	29	5	5
	B			MIN	25	40	20	24	29	5	5
	CLR H			MIN	20	20	20	24	24	5	5
tsu				MIN	25	25	5	-	-	5	4
t_{PLH}		A	QA	MAX	20	20	30	59	48	19	12
t_{PHL}				MAX	20	20	30	59	48	19	12
t_{PLH}		B	QD	MAX	60	60	72	86	93	26.5	16.5
t_{PHL}				MAX	60	60	72	86	93	26.5	16.5
t_{PHL}		CLR	Q	MAX	39	39	41	41	48	18	11.5

UNIT fmax : MHz, other : ns

PRODUCTION DATA information is current as of publication date. Products conform to specifications per the terms of Texas Instruments standard warranty. Production processing does not necessarily include testing of all parameters. See www.ti.com/sc/logic for the most current data sheets.

395

CASCADABLE UNIVERSAL SHIFT REGISTERS

- 3-State Outputs
- Parallel-In, Parallel-Out Registers
- Low Power Dissipation: 75mW Typical (Enable)

Logic Diagram

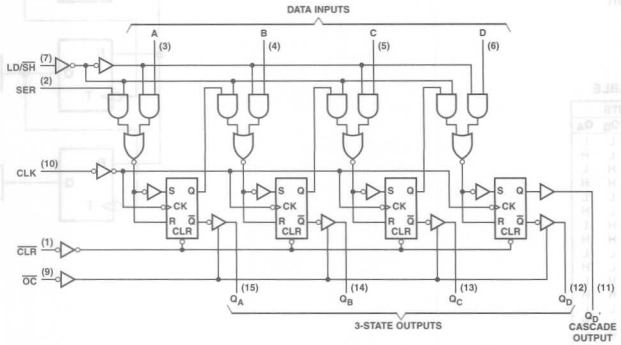

: OBSOLETED or NOT RECOMMENDED NEW DESIGNS

FUNCTION TABLE

INPUTS								3-STATE OUTPUTS				CASCADE OUTPUT
CLEAR	LOAD/$\overline{\text{SHIFT}}$ CONTROL	CLOCK	SERIAL	PARALLEL A	B	C	D	Q_A	Q_B	Q_C	Q_D	QD
L	X	X	X	X	X	X	X	L	L	L	L	L
H	H	H	X	X	X	X	X	Q_{A0}	Q_{B0}	Q_{C0}	Q_{D0}	Q_{D0}
H	H	↓	X	a	b	c	d	a	b	c	d	d
H	L	H	X	X	X	X	X	Q_{A0}	Q_{Bn}	Q_{Cn}	Q_{Dn}	Q_{DO}
H	L	↓	H	X	X	X	X	H	Q_{An}	Q_{Bn}	Q_{Cn}	Q_{Cn}
H	L	↓	L	X	X	X	X	L	Q_{An}	Q_{Bn}	Q_{Cn}	Q_{Cn}

RECOMMENDED OPERATING CONDITIONS

PARAMETER		MAX or MIN	LS	UNIT
I_{CC}		MAX	34	mA
I_{OH}	QA, QB, QC, QD	MAX	-2.6	mA
	QD'	MAX	-0.4	mA
I_{OL}	QA, QB, QC, QD	MAX	24	mA
	QD'	MAX	8	mA

SWITCHING CHARACTERISTICS

PARAMETER		INPUT	OUTPUT	MAX or MIN	LS
fmax				MIN	30
tw				MIN	16
tsu	LD/$\overline{\text{SH}}$			MIN	40
	OTHER			MIN	20
th				MIN	10
t_{PLH}		CLK	Q	MAX	30
t_{PHL}				MAX	30

UNIT fmax : MHz, other : ns

Logic Diagram

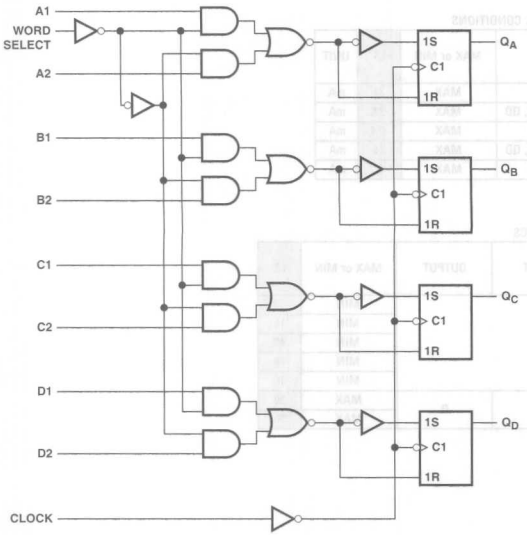

FUNCTION TABLE

INPUTS		OUTPUTS			
WORD SELECT	CLOCK	Q_A	Q_B	Q_C	Q_D
L	↑	A1	B1	C1	D1
H	↑	A2	B2	C2	D2
X	L	Q_{A0}	Q_{B0}	Q_{C0}	Q_{D0}

RECOMMENDED OPERATING CONDITIONS

PARAMETER	MAX or MIN	LS	UNIT
I_{CC}	MAX	13	mA
I_{OH}	MAX	-0.4	mA
I_{OL}	MAX	8	mA

SWITCHING CHARACTERISTICS

PARAMETER		INPUT	OUTPUT	MAX or MIN	LS
tw				MIN	20
tsu	DATA			MIN	25
	WORD SELECT			MIN	45
th	DATA			MIN	0
	WORD SELECT			MIN	0
t_{PLH}		CLK	Q	MAX	27
t_{PHL}				MAX	32

UNIT: ns

: OBSOLETED or NOT RECOMMENDED NEW DESIGNS

Logic Diagram

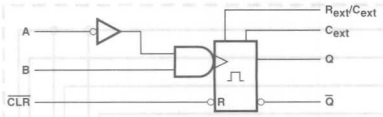

FUNCTION TABLE

INPUTS			OUTPUTS	
CLR	A	B	Q	Q
L	X	X	L	H
X	H	X	L	H
X	X	L	L	H
H	L	↑	⎍	⎍
H	↓	H	⎍	⎍

RECOMMENDED OPERATING CONDITIONS

PARAMETER	MAX or MIN	LS	CD74 HC	CD74 HCT	UNIT
I_{CC}	MAX	20	0.16	0.16	mA
I_{OH}	MAX	-0.4	-4	-4	mA
I_{OL}	MAX	8	4	4	mA

SWITCHING CHARACTERISTICS

PARAMETER	INPUT	OUTPUT	MAX or MIN	LS	CD74 HC	CD74 HCT
t_w			MIN	40	30	30
t_{PLH}	A	Q	MAX	33	90	-
	B			44	90	-
t_{PHL}	A	$\overline{Q}$	MAX	45	96	-
	B			56	96	-
t_{PLH}	$\overline{CLR}$	Q	MAX	27	65	-
t_{PHL}		$\overline{Q}$	MAX	45	65	-

UNIT: ns

PRODUCTION DATA information is current as of publication date. Products conform to specifications per the terms of Texas Instruments standard warranty. Production processing does not necessarily include testing of all parameters. See www.ti.com/sc/logic for the most current data sheets.

QUADRUPLE TRIDIRECTIONAL BUS TRANSCEIVERS

Logic Diagram

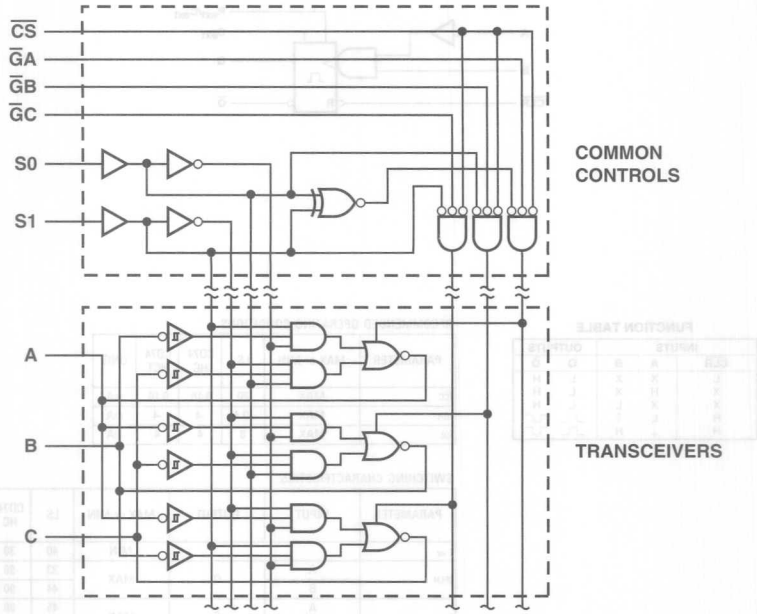

: OBSOLETED or NOT RECOMMENDED NEW DESIGNS

FUNCTION TABLE

INPUTS						TRANSFERS BUSES
$\overline{CS}$	S1	S0	$\overline{GA}$	$\overline{GB}$	$\overline{GC}$	
H	X	X	X	X	X	None
X	H	H	X	X	X	None
X	X	X	H	H	H	None
X	L	L	X	H	H	None
X	L	H	H	X	H	None
X	H	L	H	H	X	None
L	L	L	X	L	L	A → B, A → C
L	L	H	L	X	L	B → C, B → A
L	H	L	L	L	X	C → A, C → B
L	L	L	X	L	H	A → B
L	L	H	H	X	L	B → C
L	H	L	L	H	X	C → A
L	L	L	X	H	L	A → C
L	L	H	L	X	H	B → A
L	H	L	H	L	X	C → B

RECOMMENDED OPERATING CONDITIONS

PARAMETER	MAX or MIN	LS	UNIT
I_{CC}	MAX	95	mA
I_{OH}	MAX	-15	mA
I_{OL}	MAX	24	mA

SWITCHING CHARACTERISTICS

PARAMETER	INPUT	OUTPUT	MAX or MIN	LS
t_{PLH}	A	B or C	MAX	14
	B	A or C		
	C	A or B		
t_{PHL}	A	B or C	MAX	20
	B	A or C		
	C	A or B		
t_{PZL}	Any $\overline{G}$	A, B, C	MAX	33
	S0, S1			42
	$\overline{CS}$			36
t_{PZH}	$\overline{G}$, S, $\overline{CS}$	A, B, C	MAX	32
t_{PLZ}	$\overline{G}$, S, $\overline{CS}$	A, B, C	MAX	35
t_{PHZ}	$\overline{G}$, S, $\overline{CS}$	A, B, C	MAX	25

UNIT:ns

OCTAL BUFFERS 3-STATE OUTPUTS

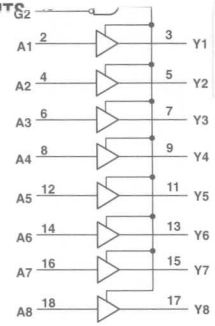

† These symbols are in accordance with ANSI/IEEE Std 91-1984 and IEC Publication 617-12.

RECOMMENDED OPERATING CONDITIONS

PARAMETER	MAX or MIN	LS	ALS	UNIT
I_{CC}	MAX	37	33	mA
I_{OH}	MAX	-2.6	-15	mA
I_{OL}	MAX	24	24	mA

SWITCHING CHARACTERISTICS

PARAMETER	INPUT	OUTPUT	MAX or MIN	LS	ALS
t_{PLH}	A	Y	MAX	15	13
t_{PHL}				18	12
t_{PZH}	$\overline{G}$	Y	MAX	40	23
t_{PZL}				45	25
t_{PHZ}	$\overline{G}$		MAX	40	10
t_{PLZ}				45	18

UNIT:ns

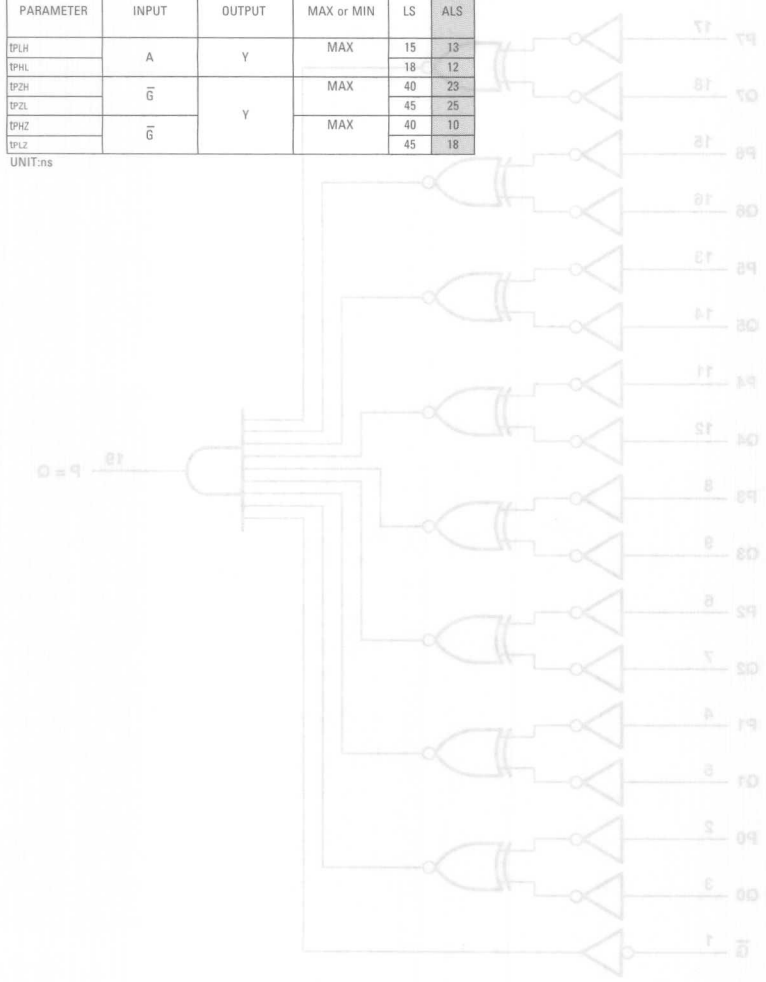

518

8-BIT IDENTITY COMPARATOR

- Open-Collector Outputs
- 20-kΩ Pullup Resistors on Q Inputs

Logic Diagram

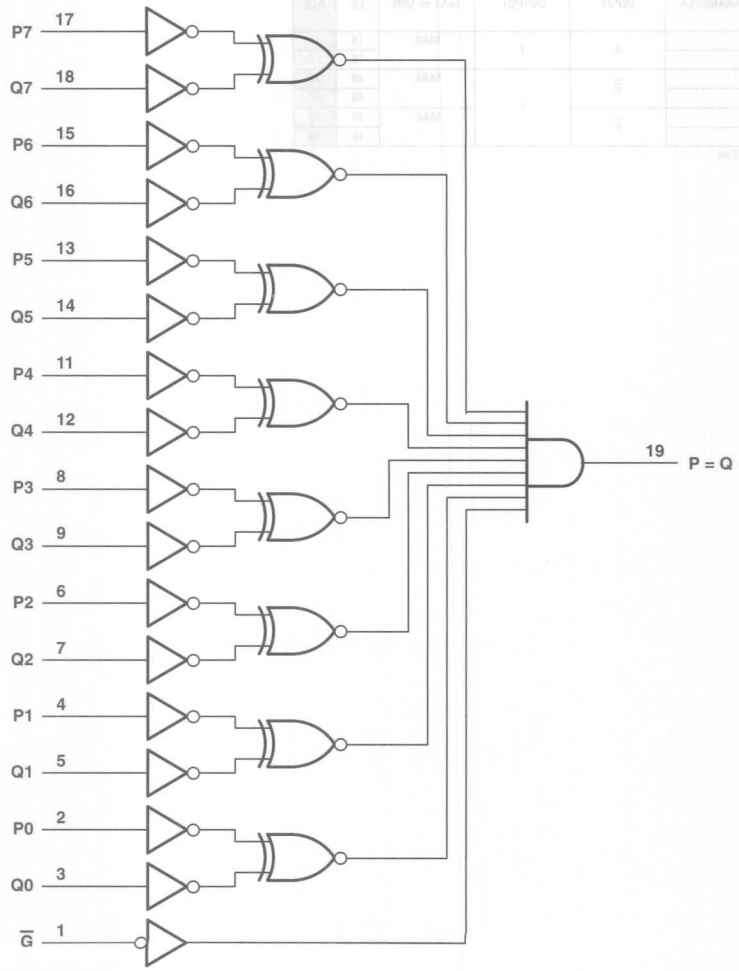

: OBSOLETED or NOT RECOMMENDED NEW DESIGNS

FUNCTION TABLE

INPUTS		OUTPUT
DATA P, Q	ENABLE $\overline{G}$	P = Q
P = Q	L	H
P > Q	L	L
P < Q	L	L
X	H	L

RECOMMENDED OPERATING CONDITIONS

PARAMETER	MAX or MIN	ALS	UNIT
I_{CC}	MAX	17	mA
I_{OL}	MAX	24	mA
V_{OH}	MAX	5.5	V

SWITCHING CHARACTERISTICS

PARAMETER	INPUT	OUTPUT	MAX or MIN	ALS
t_{PLH}	P or Q	P = Q	MAX	33
t_{PHL}				15
t_{PLH}	$\overline{G}$	P = Q	MAX	33
t_{PHL}				15

UNIT: ns

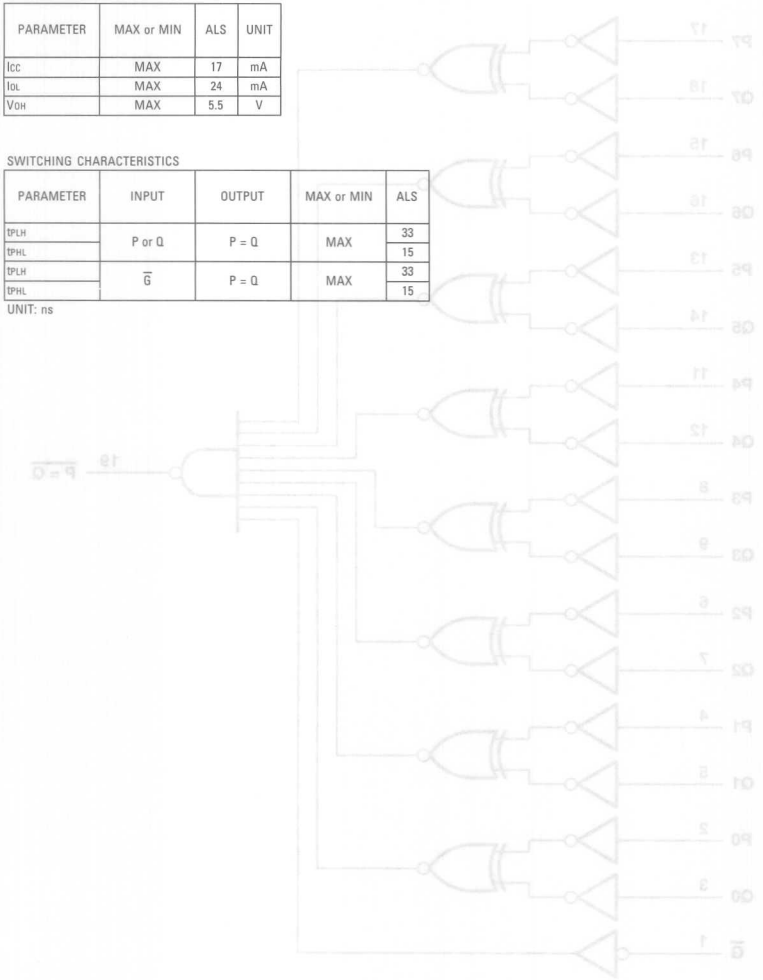

Logic Diagram

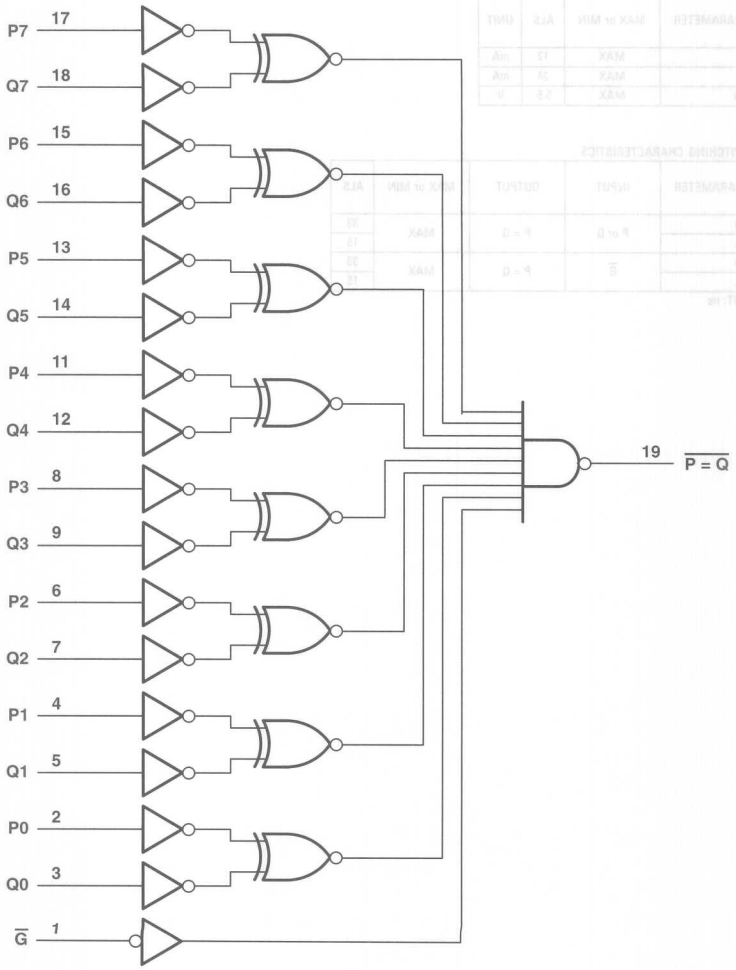

: OBSOLETED or NOT RECOMMENDED NEW DESIGNS

RECOMMENDED OPERATING CONDITIONS

PARAMETER	MAX or MIN	ALS	F	AC 11	UNIT
I_{CC}	MAX	19	32	8	mA
I_{OH}	MAX	-2.6	-1	-24	mA
I_{OL}	MAX	24	20	24	mA

SWITCHING CHARACTERISTICS

PARAMETER	INPUT	OUTPUT	MAX or MIN	ALS	F	AC 11
t_{PLH}	P or Q	$\overline{P = Q}$	MAX	12	8.7	12.6
t_{PHL}				20	10.3	11.3
t_{PLH}	$\overline{OE}$	$\overline{P = Q}$	MAX	12	6.4	7.4
t_{PHL}				22	10.4	7.8

UNIT: ns

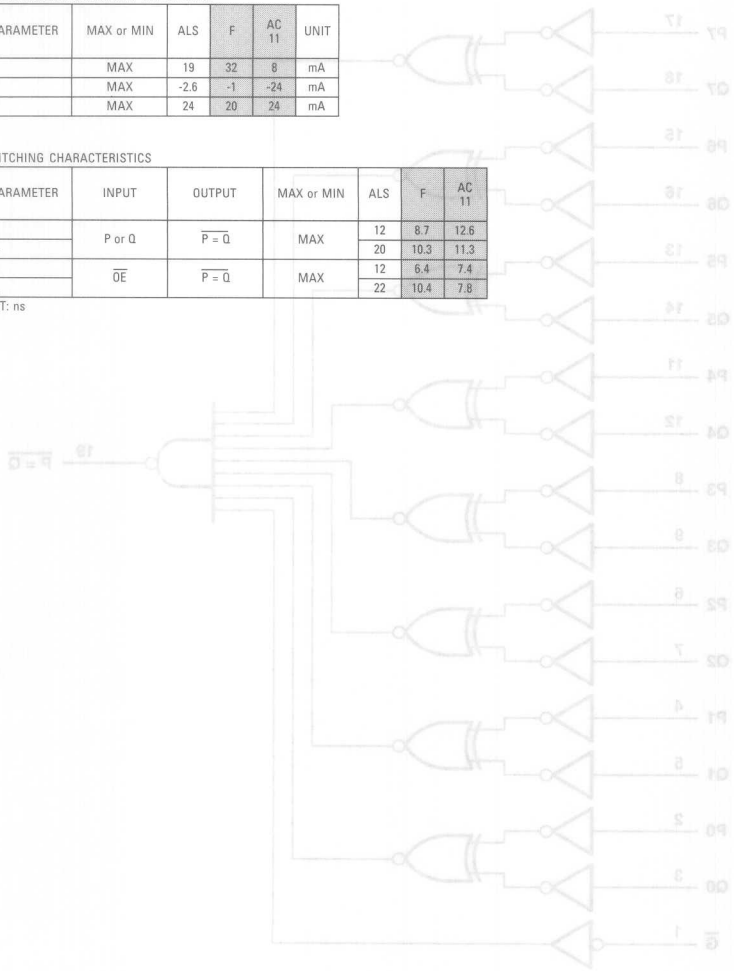

521

8-BIT IDENTITY COMPARATOR

- 74AC11xxx: Product Available in Reduced-Noise Advanced CMOS (11000 Series)

Logic Diagram

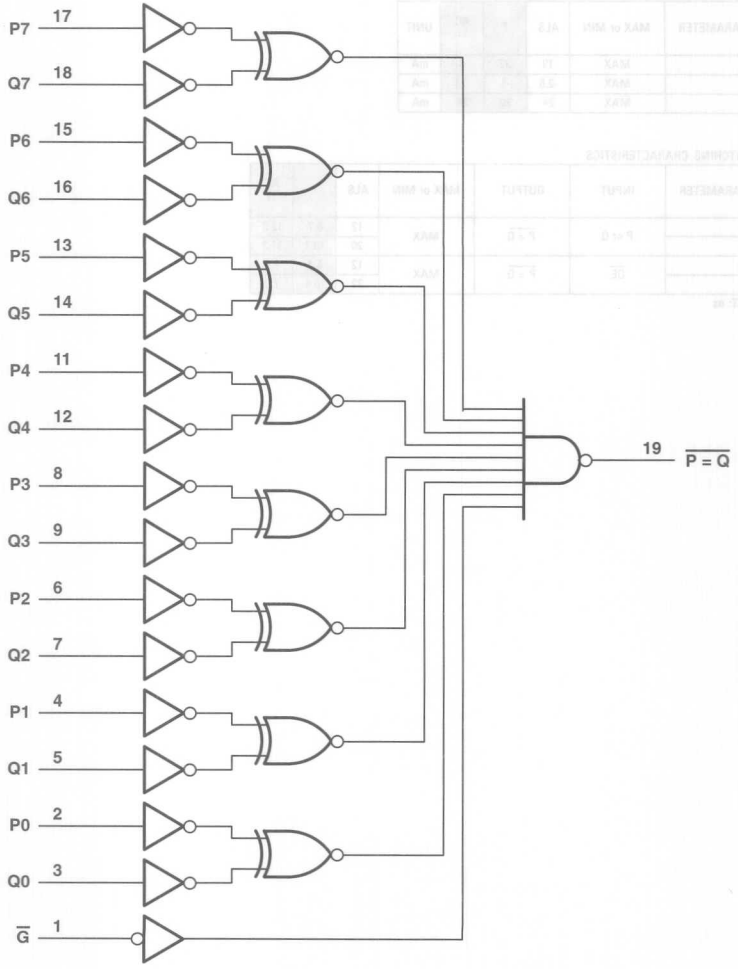

: OBSOLETED or NOT RECOMMENDED NEW DESIGNS

FUNCTION TABLE

INPUTS		OUTPUT
DATA P, Q	ENABLE $\overline{G}$	$\overline{P = Q}$
P = Q	L	L
P > Q	L	H
P < Q	L	H
X	H	H

RECOMMENDED OPERATING CONDITIONS

PARAMETER	MAX or MIN	ALS	F	AC 11	UNIT
I_{CC}	MAX	19	32	0.08	mA
I_{OH}	MAX	-2.6	-1	-24	mA
I_{OL}	MAX	24	20	24	mA

SWITCHING CHARACTERISTICS

PARAMETER	INPUT	OUTPUT	MAX or MIN	ALS	F	AC 11
t_{PLH}	P or Q	$\overline{P = Q}$	MAX	12	11	13
t_{PHL}				20	11	11.4
t_{PLH}	$\overline{G}$	$\overline{P = Q}$	MAX	12	7.5	7.9
t_{PHL}				22	10	8.1

UNIT: ns

533

- 74AC11xxx: Product Available in Reduced-Noise Advanced CMOS (11000 Series)
- 74ACT11xxx: Product Available in Reduced-Noise Advanced CMOS (11000 Series)

Logic Diagram

FUNCTION TABLE

INPUTS			OUTPUT
ENABLE			
$\overline{OC}$	C	D	$\overline{Q}$
L	H	H	L
L	H	L	H
L	L	X	$\overline{Q}_0$
H	X	X	Z

RECOMMENDED OPERATING CONDITIONS

PARAMETER	MAX or MIN	ALS	AS	SN74 HC	CD74 HC	SN74 HCT	CD74 HCT	ABT	AC 11	SN74 AC	ACT 11	SN74 ACT	UNIT
I_{CC}	MAX	28	110	0.08	0.16	0.08	0.16	30	0.08	0.04	0.08	0.04	mA
I_{OH}	MAX	-2.6	-15	-6	-6	-6	-6	-32	-24	-24	-24	-24	mA
I_{OL}	MAX	24	48	6	6	6	6	64	24	24	24	24	mA

SWITCHING CHARACTERISTICS

PARAMETER	INPUT	OUTPUT	MAX or MIN	ALS	AS	SN74 HC	CD74 HC	SN74 HCT	CD74 HCT	ABT	AC 11	SN74 AC	ACT 11	SN74 ACT
t_w			MIN	15	2	20	24	25	24	3.3	4	5	5	6
t_{su}			MIN	15	2	13	15	13	15	2.1	3.5	4.5	3.5	4
t_h			MIN	7	3	5	11	5	12	2.1	2	1	3.5	2.5
t_{PLH}	D	$\overline{Q}$	MAX	19	7.5	38	50	44	51	6.4	9.8	11	11.3	11.5
t_{PHL}				13	7	38	50	44	51	6.6	8	10.5	9.5	11
t_{PLH}	LE (CD74: $\overline{LE}$)	$\overline{Q}$	MAX	23	9	44	53	44	57	7.3	11.3	11.5	13	11.5
t_{PHL}				18	8	44	53	44	57	7.3	10.3	11	12.2	11.5
t_{PZH}	$\overline{OE}$	$\overline{Q}$	MAX	17	6.5	38	45	44	53	5.7	10.8	10.5	12.5	11
t_{PZL}				18	9.5	38	45	44	53	6.7	9.7	10.5	12	11
t_{PHZ}	$\overline{OE}$	$\overline{Q}$	MAX	10	6.5	38	45	44	45	6.9	11.4	11	12.8	11
t_{PLZ}				16	7	38	45	44	45	6.5	8.9	11	10.3	11

UNIT: ns

: OBSOLETED or NOT RECOMMENDED NEW DESIGNS

534

Functionally Equivalent to '374

- 74AC11xxx: Product Available in Reduced-Noise Advanced CMOS (11000 Series)
- 74ACT11xxx: Product Available in Reduced-Noise Advanced CMOS (11000 Series)

Logic Diagram

FUNCTION TABLE

INPUTS			OUTPUT
$\overline{OC}$	CLK	D	Q
L	↑	H	L
L	↑	L	H
L	L	X	Q_0
H	X	X	Z

RECOMMENDED OPERATING CONDITIONS

PARAMETER	MAX or MIN	ALS	AS	SN74 HC	CD74 HC	SN74 HCT	CD74 HCT	ABT	AC 11	SN74 AC	CD74 AC	ACT 11	SN74 ACT	UNIT
I_{CC}	MAX	31	128	0.08	0.16	0.08	0.16	30	0.08	0.04	0.16	0.08	0.04	mA
I_{OH}	MAX	-2.6	-15	-6	-6	-6	-6	-32	-24	-24	-24	-24	-24	mA
I_{OL}	MAX	24	48	6	6	6	6	64	24	24	24	24	24	mA

SWITCHING CHARACTERISTICS

PARAMETER		INPUT	OUTPUT	MAX or MIN	ALS	AS	SN74 HC	CD74 HC	SN74 HCT	CD74 HCT	ABT	AC 11	SN74 AC	CD74 AC
fmax				MIN	35	125	25	20	25	16	125	75	140	125
tw	CLK "H"			MIN	14	4	20	24	20	30	3.5	6.5	4	4
	CLK "L"				14	3	20	24	20	30	3.5	6.5	4	4
tsu				MIN	10	2	25	18	25	30	1.6	3.5	4	2
th					0	2	5	5	5	5	2	4.5	1.5	2
t_{PLH}		CLK (CD74: $\overline{CP}$)	$\overline{Q}$	MAX	12	8	45	50	45	53	6.7	11.7	12	11.3
t_{PHL}					16	9	45	50	45	53	7.6	12.1	11	11.3
t_{PZH}		$\overline{OE}$	$\overline{Q}$	MAX	17	6	38	45	37	53	5	10.4	11.5	14.5
t_{PZL}					18	10	38	45	37	53	6.8	10.4	11.5	14.5
t_{PHZ}		$\overline{OE}$	$\overline{Q}$	MAX	10	6	38	45	37	45	7.3	11.6	12.5	14.5
t_{PLZ}					14	6	38	45	37	45	6.5	9.2	11	14.5

PARAMETER		INPUT	OUTPUT	MAX or MIN	ACT 11	SN74 ACT
fmax				MIN	55	120
tw	CLK "H"			MIN	9	3.5
	CLK "L"				9	3.5
tsu				MIN	3	4
th					5.5	1.5
t_{PLH}		CLK (CD74: $\overline{CP}$)	$\overline{Q}$	MAX	14.5	12.5
t_{PHL}					15	12
t_{PZH}		$\overline{OE}$	$\overline{Q}$	MAX	13.3	12.5
t_{PZL}					13.5	11.5
t_{PHZ}		$\overline{OE}$	$\overline{Q}$	MAX	13.5	13.5
t_{PLZ}					12	10.5

UNIT fmax : MHz, other : ns

PRODUCTION DATA information is current as of publication date. Products conform to specifications per the terms of Texas Instruments standard warranty. Production processing does not necessarily include testing of all parameters. See www.ti.com/sc/logic for the most current data sheets.

540

OCTAL BUFFERS AND LINE DRIVERS

- 3-State Outputs Drive Bus Lines or Buffer Memory Address Registers
- P-N-P Inputs Reduce D-C Loading
- Schmitt-Triggered Inputs (SN74LS540)

Logic Diagram

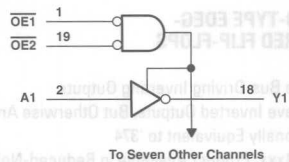

RECOMMENDED OPERATING CONDITIONS

PARAMETER	MAX or MIN	LS	ALS	ALS A-1	SN74 HC	CD74 HC	SN74 HCT	CD74 HCT	SN74 BCT	ABT	LVTH 3V	CD74 AC	CD74 ACT	AHC	AHCT	UNIT
I_{CC}	MAX	52	22	22	0.08	0.16	0.08	0.16	71	30	5	0.16	0.16	0.04	0.04	mA
I_{OH}	MAX	-15	-15	-15	-6	-6	-6	-6	-15	-32	-32	-24	-24	-8	-8	mA
I_{OL}	MAX	24	24	48	6	6	6	6	64	64	64	24	24	8	8	mA

PARAMETER	MAX or MIN	LV 3V	LV 5V	LVC 3V	UNIT
I_{CC}	MAX	-	0.02	0.01	mA
I_{OH}	MAX	-8	-16	-24	mA
I_{OL}	MAX	8	16	24	mA

SWITCHING CHARACTERISTICS

PARAMETER	INPUT	OUTPUT	MAX or MIN	LS	ALS	ALS A-1	SN74 HC	CD74 HC	SN74 HCT	CD74 HCT	SN74 BCT	ABT	LVTH 3V
t_{PLH}	A	Y (CD74: $\overline{Y}$)	MAX	15	12	12	25	33	25	36	6.9	4.8	3.8
t_{PHL}				15	9	9	25	33	25	36	4	4.8	3.8
t_{PZH}	$\overline{OE}$	Y (CD74: $\overline{Y}$)	MAX	25	15	15	38	48	38	53	10.1	5.9	5.2
t_{PZL}				38	20	20	38	48	38	53	11.3	6.4	5.3
t_{PHZ}	$\overline{OE}$	Y (CD74: $\overline{Y}$)	MAX	25	10	10	38	48	38	53	9	7.3	5.6
t_{PLZ}				18	12	12	38	48	38	53	8.5	6.2	5

PARAMETER	INPUT	OUTPUT	MAX or MIN	CD74 AC	CD74 ACT	AHC	AHCT	LV 3V	LV 5V	LVC 3V
t_{PLH}	A	Y (CD74: $\overline{Y}$)	MAX	68	7.2	8	10	12	8	5.3
t_{PHL}				68	7.2	8	10	12	8	5.3
t_{PZH}	$\overline{OE}$	Y (CD74: $\overline{Y}$)	MAX	12	13.4	10.5	12	16	10.5	6.6
t_{PZL}				12	13.4	10.5	12	16	10.5	6.6
t_{PHZ}	$\overline{OE}$	Y (CD74: $\overline{Y}$)	MAX	12	13.4	10	12	17.5	10	7.4
t_{PLZ}				12	13.4	10	12	17.5	10	7.4

UNIT: ns

: OBSOLETED or NOT RECOMMENDED NEW DESIGNS

541

OCTAL BUFFERS AND LINE DRIVERS

- 3-State Outputs Drive Bus Lines or Buffer Memory Address Registers
- P-N-P Inputs Reduce D-C Loading
- Schmitt-Triggered Inputs (SN74LS541)

Logic Diagram

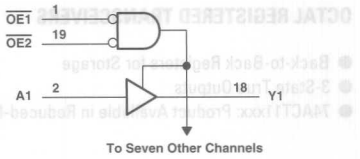

RECOMMENDED OPERATING CONDITIONS

PARAMETER	MAX or MIN	LS	ALS	ALS A-1	F	SN74 HC	CD74 HC	SN74 HCT	CD74 HCT	SN74 BCT	ABT	LVTH 3V	CD74 AC	CD74 ACT	AHC	UNIT
I_{CC}	MAX	55	25	25	75	0.08	0.16	0.08	0.16	72	30	5	0.16	0.16	0.04	mA
I_{OH}	MAX	-15	-15	-15	-15	-6	-6	-6	-6	-15	-32	-32	-24	-24	-8	mA
I_{OL}	MAX	24	24	48	64	6	6	6	6	64	64	64	24	24	8	mA

PARAMETER	MAX or MIN	AHCT	LV 3V	LV 5V	LVC 3V	UNIT
I_{CC}	MAX	0.04	-	0.02	0.01	mA
I_{OH}	MAX	-8	-8	-16	-24	mA
I_{OL}	MAX	8	8	16	24	mA

SWITCHING CHARACTERISTICS

PARAMETER	INPUT	OUTPUT	MAX or MIN	LS	ALS	ALS A-1	F	SN74 HC	CD74 HC	SN74 HCT	CD74 HCT	SN74 BCT	ABT
t_{PLH}	A	Y	MAX	15	14	14	6	29	35	29	42	6	3.6
t_{PHL}				18	10	10	6	29	35	29	42	8.2	3.9
t_{PZH}	$\overline{OE}$	Y	MAX	32	15	15	9.5	38	48	38	53	10.7	4
t_{PZL}				38	20	20	9.5	38	48	38	53	11.5	5.9
t_{PHZ}	$\overline{OE}$	Y	MAX	29	10	10	6.5	38	48	38	53	8.6	5.8
t_{PLZ}				18	12	12	6	38	48	38	53	8.6	4.4

PARAMETER	INPUT	OUTPUT	MAX or MIN	LVTH 3V	CD74 AC	CD74 ACT	AHC	AHCT	LV 3V	LV 5V	LVC 3V
t_{PLH}	A	Y	MAX	3.5	7.8	8.2	8	9.5	12	8	5.1
t_{PHL}				3.5	7.8	8.2	8	9.5	12	8	5.1
t_{PZH}	$\overline{OE}$	Y	MAX	5.2	12	13.4	10.5	12	16	10.5	7
t_{PZL}				5.3	12	13.4	10.5	12	16	10.5	7
t_{PHZ}	$\overline{OE}$	Y	MAX	5.6	12	13.4	10	12	17.5	10	7
t_{PLZ}				5	12	13.4	10	12	17.5	10	7

UNIT: ns

PRODUCTION DATA information is current as of publication date. Products conform to specifications per the terms of Texas Instruments standard warranty. Production processing does not necessarily include testing of all parameters. See www.ti.com/sc/logic for the most current data sheets.

Logic Diagram

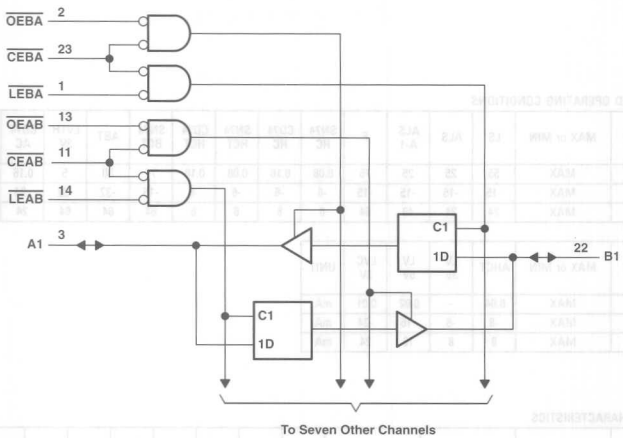

: OBSOLETED or NOT RECOMMENDED NEW DESIGNS

FUNCTION TABLE†

INPUTS				OUTPUT
$\overline{CEAB}$	$\overline{LEAB}$	$\overline{OEAB}$	A	B
H	X	X	X	Z
X	X	H	X	Z
L	H	L	X	B_0‡
L	L	L	L	L
L	L	L	H	H

† A-to-B data flow is shown; B-to-A flow control is the same except that it uses $\overline{CEBA}$, $\overline{LEBA}$, and $\overline{OEBA}$.
‡ Output level before the indicated steady-state input conditions were established

RECOMMENDED OPERATING CONDITIONS

PARAMETER		MAX or MIN	F	SN74 BCT	ABT	LVTH 3V	ACT 11	LVC 3V	UNIT
I_{CCH}		MAX	100	8	0.25	0.19	0.08	0.01	mA
I_{CCL}		MAX	125	71	30	5	0.08	0.01	mA
I_{CCZ}		MAX	125	15	0.25	0.19	0.08	0.01	mA
I_{OH}	A	MAX	-3	-15	-32	-32	-24	-24	mA
	B	MAX	-15	-15	-32	-32	-24	-24	mA
I_{OL}	A	MAX	24	64	64	64	24	24	mA
	B	MAX	64	64	64	64	24	24	mA

SWITCHING CHARACTERISTICS

PARAMETER			INPUT	OUTPUT	MAX or MIN	F	SN74 BCT	ABT	LVTH 3V	ACT 11	LVC 3V
t_w					MIN	5	7	3.5	3.3	4	3.3
t_{su}	$\overline{LE}$ ↑ before	"H"			MIN	3.5	4.5	3.5	0.4	2.5	1.6
	$\overline{LE}$ ↑ before	"L"				3.5	4.5	3	1	2.5	1.6
	$\overline{CE}$ ↑ before	"H"				-	-	3.5	0.2	3	1.6
	$\overline{CE}$ ↑ before	"L"				-	-	3	0.7	3	1.6
t_h	$\overline{LE}$ ↑ after	"H"			MIN	3.5	1.5	0.5	1.5	2	2.1
	$\overline{LE}$ ↑ after	"L"				3.5	1.5	0.5	1.3	2	2.1
	$\overline{CE}$ ↑ after	"H"				-	-	0.5	1.6	1.5	2.1
	$\overline{CE}$ ↑ after	"L"				-	-	0.5	1.4	1.5	2.1
t_{PLH}			A or B	B or A	MAX	8.5	8.8	6.9	3.7	10.2	7
t_{PHL}						7.5	9.6	6.9	3.7	12.1	7
t_{PLH}			$\overline{LEBA}$	A	MAX	12.5	12.9	6.6	4.7	11.2	8.5
t_{PHL}						12.5	12.7	7.1	4.7	13.2	8.5
t_{PLH}			$\overline{LEAB}$	B	MAX	12.5	12.9	6.6	4.7	11.2	8.5
t_{PHL}						12.5	12.7	7.1	4.7	13.2	8.5
t_{PZH}			$\overline{OE}$	A or B	MAX	10	10.7	6.4	4.9	11.5	7.7
t_{PZL}						12	12.3	7.5	4.9	15.3	7.7
t_{PHZ}			$\overline{OE}$	A or B	MAX	9	8.1	8.4	5.3	10.4	7
t_{PLZ}						8.5	7.2	8	5.3	10.5	7
t_{PZH}			$\overline{CE}$	A or B	MAX	10	12	6.4	5.3	12.2	8
t_{PZL}						12	13.5	7.5	5.3	16	8
t_{PHZ}			$\overline{CE}$	A or B	MAX	9	8.5	8.4	5.4	11	7
t_{PLZ}						8.5	7.6	8	5.4	11.1	7

UNIT: ns

561

SYNCHRONOUS 4-BIT COUNTER

- 3-State Outputs
- Choice of Asynchronous or Synchronous Clearing and Loading
- Internal Look-Ahead Circuitry for Fast Cascading

Logic Diagram

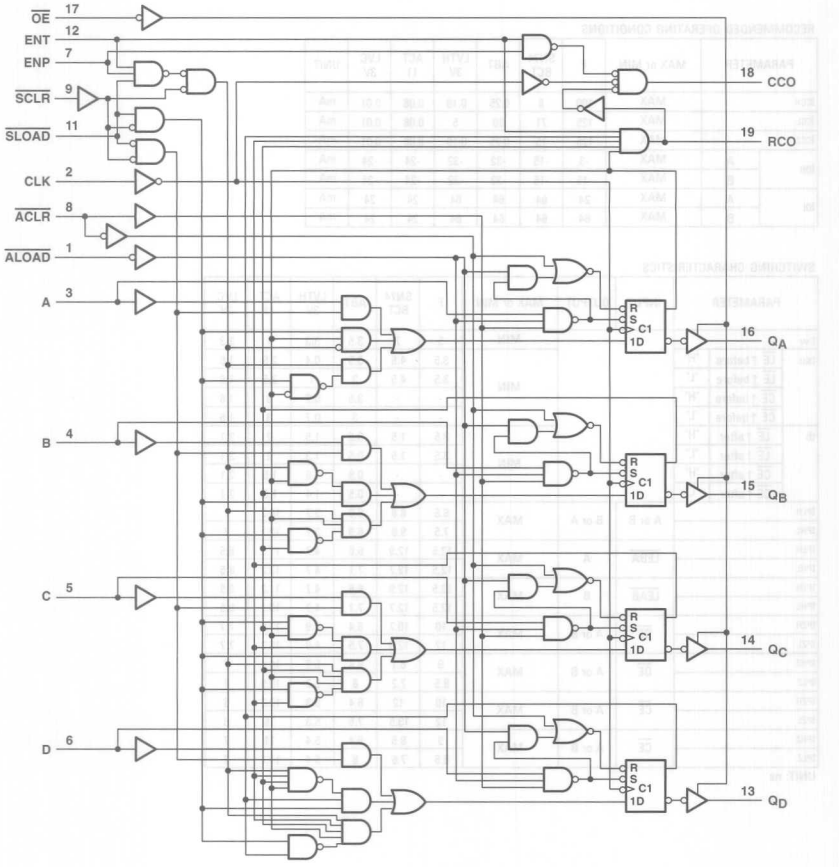

: OBSOLETED or NOT RECOMMENDED NEW DESIGNS

FUNCTION TABLE

INPUTS								OPERATION
$\overline{OE}$	$\overline{ACLR}$	ALOAD	$\overline{SCLR}$	$\overline{SLOAD}$	ENT	ENP	CLK	
H	X	X	X	X	X	X	X	Q outputs disabled
L	L	X	X	X	X	X	X	Asynchronous clear
L	H	L	X	X	X	X	X	Asynchronous load
L	H	H	L	X	X	X	↑	Synchronous clear
L	H	H	H	L	X	X	↑	Synchronous load
L	H	H	H	H	H	H	↑	Count
L	H	H	H	H	L	X	X	Inhibit counting
L	H	H	H	H	X	L	X	Inhibit counting

RECOMMENDED OPERATING CONDITIONS

PARAMETER		MAX or MIN	ALS	UNIT
I_{CC}		MAX	36	mA
I_{OH}	OUTPUT Q	MAX	-2.6	mA
	CCO & RCO	MAX	-0.4	mA
I_{OL}	OUTPUT Q	MAX	24	mA
	CCO & RCO	MAX	8	mA

SWITCHING CHARACTERISTICS

PARAMETER			INPUT	OUTPUT	MAX or MIN	ALS
fmax					MIN	30
tw	CLK "H"				MIN	16.5
	CLK "L"					16.5
tsu	ENP or ENT	H			MIN	20
		L				20
	A, B, C, D					20
	$\overline{SCLR}$	L				15
		H				30
	$\overline{SLOAD}$	L				15
		H				30
th					MIN	0
t_{PLH}			CLK	Q	MAX	12
t_{PHL}						18
t_{PLH}			CLK	RCO	MAX	29
t_{PHL}						24
t_{PLH}			$\overline{ALOAD}$	Q	MAX	35
t_{PHL}						23
t_{PLH}			$\overline{ALOAD}$	CCO	MAX	55
t_{PHL}						33
t_{PLH}			ENT	RCO	MAX	16
t_{PHL}						14
t_{PHL}			$\overline{ACLR}$	Q	MAX	22

UNIT fmax : MHz, other : ns

PRODUCTION DATA information is current as of publication date. Products conform to specifications per the terms of Texas Instruments standard warranty. Production processing does not necessarily include testing of all parameters. See www.ti.com/sc/logic for the most current data sheets.

563

OCTAL D-TYPE TRANSPARENT LATCHES WITH INVERTED OUTPUTS

- 3-State Buffer-Type Outputs Drive Bus Lines Directly
- Bus-Structured Pinout

Logic Diagram

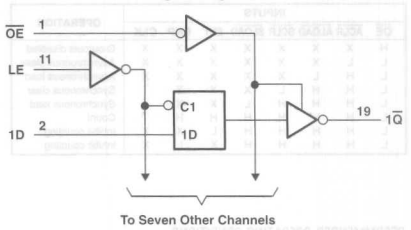

FUNCTION TABLE

INPUTS			OUTPUT
ENABLE			
$\overline{OE}$	LE	D	$\overline{Q}$
L	H	H	L
L	H	L	H
L	L	X	Q_0
H	X	X	Z

RECOMMENDED OPERATING CONDITIONS

PARAMETER	MAX or MIN	ALS	SN74 HC	CD74 HC	SN74 HCT	CD74 HCT	SN74 AC	CD74 AC	SN74 ACT	UNIT
I_{CC}	MAX	29	0.08	0.16	0.08	0.16	0.08	0.16	0.04	mA
I_{OH}	MAX	-2.6	-6	-6	-6	-6	-24	-24	-24	mA
I_{OL}	MAX	24	6	6	6	6	24	24	24	mA

SWITCHING CHARACTERISTICS

PARAMETER	INPUT	OUTPUT	MAX or MIN	ALS	SN74 HC	CD74 HC	SN74 HCT	CD74 HCT	SN74 AC	CD74 AC	SN74 ACT
t_w			MIN	15	20	24	25	24	5	4	3
t_{su}				10	13	15	13	15	2.5	2	4.5
t_h				10	5	4	10	5	2	3	0
t_{PLH}	D	$\overline{Q}$	MAX	18	44	45	44	45	11.5	10.5	12.5
t_{PHL}				14	44	45	44	45	11	10.5	11
t_{PLH}	LE (CD74: $\overline{LE}$)	$\overline{Q}$	MAX	22	44	50	44	53	11	12	11.5
t_{PHL}				21	44	50	44	53	9.5	12	10.5
t_{PZH}	$\overline{OE}$	$\overline{Q}$	MAX	18	38	45	44	53	10	10.5	10
t_{PZL}				18	38	45	44	53	9.5	10.5	9.5
t_{PHZ}	$\overline{OE}$	$\overline{Q}$	MAX	10	38	45	44	53	12	11.5	11.5
t_{PLZ}				15	38	45	44	53	9	11.5	8.5

UNIT: ns

: OBSOLETED or NOT RECOMMENDED NEW DESIGNS

564

OCTAL D-TYPE EDGE-TRIGGERED FLIP-FLOPS

- 3-State Buffer-Type Inverting Outputs Drive Bus Lines Directly
- Bus-Structured Pinout

Logic Diagram

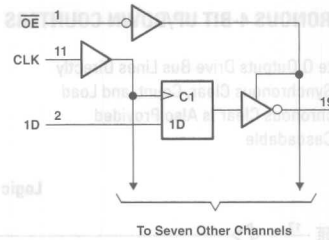

FUNCTION TABLE

INPUTS			OUTPUT
$\overline{OE}$	CLK	D	$\overline{Q}$
L	↑	H	L
L	↑	L	H
L	L	X	$\overline{Q}_0$
H	X	X	Z

RECOMMENDED OPERATING CONDITIONS

PARAMETER	MAX or MIN	ALS	SN74 HC	CD74 HC	SN74 HCT	CD74 HCT	SN74 AC	SN74 ACT	UNIT
I_{CC}	MAX	30	0.08	0.16	0.08	0.16	0.04	0.04	mA
I_{OH}	MAX	-2.6	-6	-6	-6	-6	-24	-24	mA
I_{OL}	MAX	24	6	6	6	6	24	24	mA

SWITCHING CHARACTERISTICS

PARAMETER		INPUT	OUTPUT	MAX or MIN	ALS	SN74 HC	CD74 HC	SN74 HCT	CD74 HCT	SN74 AC	SN74 ACT
fmax				MIN	30	25	20	25	16	85	75
tw	CLK "H"			MIN	14	20	24	20	30	5	3.5
	CLK "L"				14	20	24	20	30	5	3.5
tsu	CLK ↑				15	25	18	25	30	2.5	3
th	CLK ↑				0	5	5	5	3	2	1
t_{PLH}		CLK	$\overline{Q}$	MAX	14	45	50	45	53	11.5	11.5
t_{PHL}					14	45	50	45	53	10.5	10.5
t_{PZH}		$\overline{OE}$	$\overline{Q}$	MAX	18	38	45	38	53	9.5	9.5
t_{PZL}					18	38	45	38	53	9.5	9.5
t_{PHZ}		$\overline{OE}$	$\overline{Q}$	MAX	10	38	41	38	45	11.5	11.5
t_{PLZ}					15	38	41	38	45	9	8.5

UNIT fmax : MHz, other : ns

PRODUCTION DATA information is current as of publication date. Products conform to specifications per the terms of Texas Instruments standard warranty. Production processing does not necessarily include testing of all parameters. See www.ti.com/sc/logic for the most current data sheets.

SYNCHRONOUS 4-BIT UP/DOWN COUNTERS

- 3-State Q Outputs Drive Bus Lines Directly
- Fully Synchronous Clear, Count, and Load
- Asynchronous Clear Is Also Provided
- Fully Cascadable

Logic Diagram

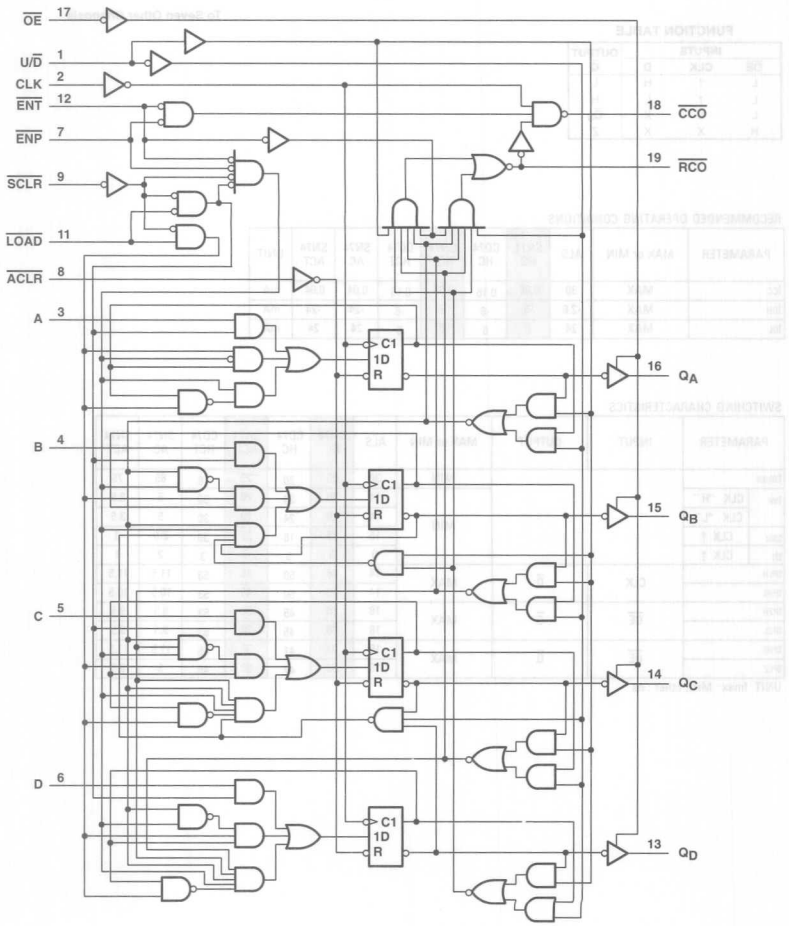

: OBSOLETED or NOT RECOMMENDED NEW DESIGNS

FUNCTION TABLE

INPUTS								OPERATION
$\overline{OE}$	$\overline{ACLR}$	$\overline{SCLR}$	$\overline{LOAD}$	$\overline{ENT}$	$\overline{ENP}$	$U/\overline{D}$	CLK	
H	X	X	X	X	X	X	X	Q outputs disabled
L	L	X	X	X	X	X	X	Asynchronous clear
L	H	L	X	X	X	X	↑	Synchronous clear
L	H	H	L	X	X	X	↑	Load
L	H	H	H	L	L	H	↑	Count up
L	H	H	H	L	L	L	↑	Count down
L	H	H	H	H	X	X	X	Inhibit count
L	H	H	H	X	H	X	X	Inhibit count

RECOMMENDED OPERATING CONDITIONS

PARAMETER		MAX or MIN	ALS	UNIT
I_{CC}		MAX	32	mA
I_{OH}	OUTPUT Q	MAX	-2.6	mA
	$\overline{CCO}$ & $\overline{RCO}$		-0.4	mA
I_{OL}	OUTPUT Q	MAX	24	mA
	$\overline{CCO}$ & $\overline{RCO}$		8	mA

SWITCHING CHARACTERISTICS

PARAMETER			INPUT	OUTPUT	MAX or MIN	ALS
fmax					MIN	30
tw	$\overline{ACLR}$, $\overline{LOAD}$				MIN	15
	CLK "H"					16.5
	CLK "L"					16.5
tsu	Data at A, B, C, D				MIN	20
	$\overline{ENP}$, $\overline{ENT}$	High				30
		Low				20
	$\overline{SCLR}$	High				15
		Low				30
	$\overline{LOAD}$	High				15
		Low				30
	$U/\overline{D}$					30
	$\overline{ACLR}$					10
th					MIN	0
t_{PLH}			CLK	ANY Q	MAX	13
t_{PHL}						16
t_{PLH}			CLK	$\overline{RCO}$	MAX	28
t_{PHL}						19
t_{PLH}			$\overline{ENT}$	$\overline{RCO}$	MAX	15
t_{PHL}						13
t_{PHL}			$\overline{ACLR}$	Q	MAX	20
t_{PZH}			$\overline{OE}$	Q	MAX	18
t_{PZL}						24
t_{PHZ}			$\overline{OE}$	Q	MAX	10
t_{PLZ}						13

UNIT fmax : MHz, other : ns

573

OCTAL D-TYPE TRANSPARENT LATCHES

- 3-State Buffer-Type Outputs Drive Bus Lines Directly
- Bus-Structured Pinout

Logic Diagram

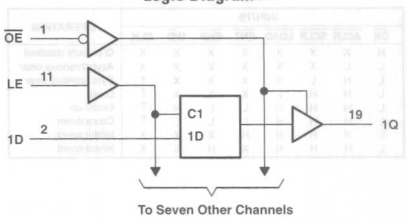

FUNCTION TABLE

INPUTS			OUTPUT
ENABLE			
$\overline{OE}$	LE	D	Q
L	H	H	H
L	H	L	L
L	L	X	Q_0
H	X	X	Z

RECOMMENDED OPERATING CONDITIONS

PARAMETER	MAX or MIN	ALS	AS	F	SN74 HC	CD74 HC	SN74 HCT	CD74 HCT	SN74 BCT	ABT	LVTH 3V	SN74 AC	CD74 AC	SN74 ACT	UNIT
I_{CC}	MAX	27	106	55	0.08	0.16	0.08	0.16	62	30	5	0.04	0.16	0.04	mA
I_{OH}	MAX	-2.6	-15	-3	-6	-6	-6	-6	-15	-32	-32	-24	-24	-24	mA
I_{OL}	MAX	24	48	24	6	6	6	6	64	64	64	24	24	24	mA

PARAMETER	MAX or MIN	CD74 ACT	AHC	AHCT	LV 3V	LV 5V	LVC 3V	UNIT
I_{CC}	MAX	0.16	0.04	0.04	-	0.02	0.01	mA
I_{OH}	MAX	-24	-8	-8	-8	-16	-24	mA
I_{OL}	MAX	24	8	8	8	16	24	mA

SWITCHING CHARACTERISTICS

PARAMETER		INPUT	OUTPUT	MAX or MIN	ALS	AS	F	SN74 HC	CD74 HC	SN74 HCT	CD74 HCT	SN74 BCT	ABT	LVTH 3V
t_w	LE			MIN	10	4.5	6	20	24	25	24	4	3.3	3.3
t_{su}	LE ↓			MIN	10	2	2	13	15	13	20	1	1.9	0.7
t_h	LE ↓			MIN	7	3	3	5	12	5	15	4	1.8	1.5
t_{PLH}		D	Q	MAX	14	8	8	44	53	44	53	8.4	5.9	3.9
t_{PHL}				MAX	14	7	6	44	53	44	53	9.6	6.2	3.9
t_{PLH}		LE	Q	MAX	20	13	13	44	53	44	53	8.1	6.6	4.2
t_{PHL}				MAX	19	7.5	8	44	53	44	53	7.8	7.2	4.2
t_{PZH}		$\overline{OE}$	Q	MAX	18	6.5	12	38	45	44	53	10.4	5.2	5.1
t_{PZL}				MAX	18	9.5	8.5	38	45	44	53	11	6.7	5.1
t_{PHZ}		$\overline{OE}$	Q	MAX	10	6.5	7.5	38	45	44	53	6	7.1	4.9
t_{PLZ}				MAX	15	7	6	38	45	44	53	6	6.5	4.6

PARAMETER		INPUT	OUTPUT	MAX or MIN	SN74 AC	CD74 AC	SN74 ACT	CD74 ACT	AHC	AHCT	LV 5V	LV 3V	LVC 3V
t_w	LE			MIN	5	4	4	4	5	5	5	5	3.3
t_{su}	LE ↓			MIN	3.5	2	3.5	2	3.5	3.5	3.5	3.5	2
t_h	LE ↓			MIN	2	3	0	3	1.5	1.5	1.5	1.5	1.5
t_{PLH}		D	Q	MAX	11.5	8.5	12	10.4	10	7.5	10	16.5	6.9
t_{PHL}				MAX	11	8.5	12	10.4	10	10	10	16.5	6.9
t_{PLH}		LE (CD74AC/ACT: LE)	Q	MAX	11	12	12	12.5	11	8.5	11	17.5	7.7
t_{PHL}				MAX	10	12	10.5	12.5	11	10	11	17.5	7.7
t_{PZH}		$\overline{OE}$	Q	MAX	10	10.5	11	13.5	11	8	11	17	7.5
t_{PZL}				MAX	9.5	10.5	10.5	13.5	11	11	11	17	7.5
t_{PHZ}		$\overline{OE}$	Q	MAX	12	11.5	12.5	12.5	11	12	11	16.5	6.5
t_{PLZ}				MAX	9	11.5	9.5	12.5	11	10.5	11	16.5	6.5

UNIT: ns

: OBSOLETED or NOT RECOMMENDED NEW DESIGNS

574

OCTAL D-TYPE EDGE-TRIGGERED FLIP-FLOPS

- 3-State Buffer-Type Noninverting Outputs Drive Bus Lines Directly
- Bus-Structured Pinout

Logic Diagram

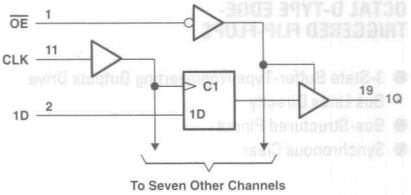

FUNCTION TABLE

INPUTS			OUTPUT
OE	CLK	D	Q
L	↑	H	H
L	↑	L	L
L	L	X	Q_0
H	X	X	Z

RECOMMENDED OPERATING CONDITIONS

PARAMETER	MAX or MIN	ALS	AS	F	SN74 HC	CD74 HC	SN74 HCT	CD74 HCT	SN74 BCT	ABT	LVTH 3V	SN74 AC	CD74 AC	SN74 ACT	UNIT
I_{CC}	MAX	28	134	86	0.08	0.16	0.08	0.16	62	30	5	0.04	0.16	0.04	mA
I_{OH}	MAX	-2.6	-15	-3	-6	-6	-6	-6	-15	-32	-24	-24	-24	-24	mA
I_{OL}	MAX	24	48	24	6	6	6	6	64	64	24	24	24	24	mA

PARAMETER	MAX or MIN	CD74 ACT	AHC	AHCT	LV 3V	LV 5V	LVC 3V	UNIT
I_{CC}	MAX	0.16	0.04	0.04	-	0.02	0.01	mA
I_{OH}	MAX	-24	-8	-8	-8	-16	-24	mA
I_{OL}	MAX	24	8	8	8	16	24	mA

SWITCHING CHARACTERISTICS

PARAMETER	INPUT	OUTPUT	MAX or MIN	ALS	AS	F	SN74 HC	CD74 HC	SN74 HCT	CD74 HCT	SN74 BCT	ABT	LVTH 3V
fmax			MIN	35	125	100	24	20	24	20	77	150	150
tw			MIN	14	5.5	7	20	24	20	24	6.5	3.3	3.3
tsu			MIN	15	5.5	2	25	18	25	18	6	1.5	2
th			MIN	0	0	2	5	5	5	5	0	1.8	0.3
t_{PLH}	CLK	Q	MAX	14	8	10	45	50	45	50	10	6.8	4.5
t_{PHL}				14	9	10	45	50	45	50	8.9	7.1	4.5
t_{PZH}	$\overline{OE}$	Q	MAX	18	6	12.5	38	45	38	45	10.4	5.1	4.8
t_{PZL}				18	10	8.5	38	45	38	45	10.9	6.7	4.8
t_{PHZ}	$\overline{OE}$	Q	MAX	10	6	8	38	41	38	42	7.5	7	4.8
t_{PLZ}				12	6	6.5	38	41	38	42	6.4	6.5	4.4

PARAMETER	INPUT	OUTPUT	MAX or MIN	SN74 AC	CD74 AC	SN74 ACT	CD74 ACT	AHC	AHCT	LV 3V	LV 5V	LVC 3V
fmax			MIN	85	125	85	110	75	75	45	75	100
tw			MIN	5	4	4	4.5	5	5.5	5	5	3.3
tsu			MIN	2	2	2.5	2	3	3.5	3.5	3.5	2
th			MIN	1.5	2	0	3	1.5	1.5	1.5	1.5	1.5
t_{PLH}	CLK	Q	MAX	11	10.8	12	11.2	12	12	19	12	7
t_{PHL}				9.5	10.8	11	11.2	12	12	19	12	7
t_{PZH}	$\overline{OE}$	Q	MAX	9	14.5	10	14.5	12.5	12.5	18.5	12.5	7.5
t_{PZL}				9	14.5	10	14.5	12.5	12.5	18.5	12.5	7.5
t_{PHZ}	$\overline{OE}$	Q	MAX	10.5	14.5	11.5	14.5	11.5	11.5	17	11.5	6.4
t_{PLZ}				8.5	14.5	9	14.5	11.5	11.5	17	11.5	6.4

UNIT fmax : MHz, other : ns

PRODUCTION DATA information is current as of publication date. Products conform to specifications per the terms of Texas Instruments standard warranty. Production processing does not necessarily include testing of all parameters. See www.ti.com/sc/logic for the most current data sheets.

575

OCTAL D-TYPE EDGE-TRIGGERED FLIP-FLOPS

- 3-State Buffer-Type Noninverting Outputs Drive Bus Lines Directly
- Bus-Structured Pinout
- Synchronous Clear

Logic Diagram

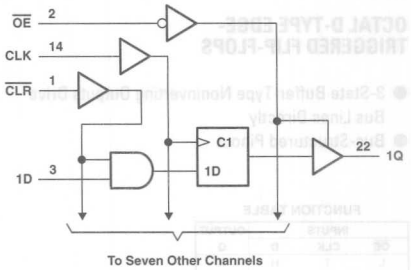

FUNCTION TABLE

INPUTS				OUTPUT
$\overline{OE}$	$\overline{CLR}$	CLK	D	Q
L	L	↑	X	L
L	H	↑	H	H
L	H	↑	L	L
L	H	L	X	Q_0
H	X	X	X	Z

RECOMMENDED OPERATING CONDITIONS

PARAMETER	MAX or MIN	ALS	AS	UNIT
I_{CC}	MAX	30	142	mA
I_{OH}	MAX	-2.6	-15	mA
I_{OL}	MAX	24	48	mA

SWITCHING CHARACTERISTICS

PARAMETER			INPUT	OUTPUT	MAX or MIN	ALS	AS
fmax					MIN	30	90
tw	CLK	H			MIN	16.5	5.5
	CLK	L					5.5
tsu	DATA					15	5.5
	$\overline{CLR}$	L					6.5
th	DATA					0	3
	$\overline{CLR}$						0
t_{PLH}			CLK	Q	MAX	14	8
t_{PHL}						14	9
t_{PZH}			$\overline{OC}$	Q	MAX	18	6
t_{PZL}						18	10
t_{PHZ}			$\overline{OC}$	Q	MAX	10	6
t_{PLZ}						13	6

UNIT fmax : MHz, other : ns

: OBSOLETED or NOT RECOMMENDED NEW DESIGNS

576

OCTAL D-TYPE EDGE-TRIGGERED FLIP-FLOPS

- 3-State Buffer-Type Inverting Outputs Drive Bus Lines Directly
- Bus-Structured Pinout
- Functionally Equivalent to '576, Except for Having Inverted Outputs

Logic Diagram

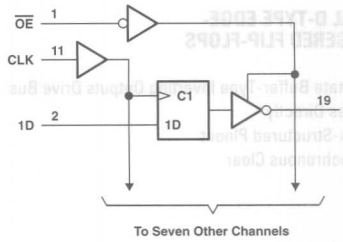

FUNCTION TABLE

INPUTS			OUTPUT
$\overline{OE}$	CLK	D	$\bar{Q}$
L	↑	H	L
L	↑	L	H
L	L	X	$\bar{Q}_0$
H	X	X	Z

RECOMMENDED OPERATING CONDITIONS

PARAMETER	MAX or MIN	ALS	AS	UNIT
I_{CC}	MAX	30	135	mA
I_{OH}	MAX	-2.6	-15	mA
I_{OL}	MAX	24	48	mA

SWITCHING CHARACTERISTICS

PARAMETER		INPUT	OUTPUT	MAX or MIN	ALS	AS
fmax				MIN	30	125
tw	H			MIN	16.5	4
	L					2
tsu	DATA				15	2
th	DATA				0	2
t_{PLH}		CLK	$\bar{Q}$	MAX	14	8
t_{PHL}					14	9
t_{PZH}		$\overline{OE}$	$\bar{Q}$	MAX	18	6
t_{PZL}					18	10
t_{PHZ}		$\overline{OE}$	$\bar{Q}$	MAX	10	6
t_{PLZ}					15	6

UNIT fmax : MHz, other : ns

PRODUCTION DATA information is current as of publication date. Products conform to specifications per the terms of Texas Instruments standard warranty. Production processing does not necessarily include testing of all parameters. See www.ti.com/sc/logic for the most current data sheets.

577

- Bus-Structured Pinout
- Synchronous Clear

Logic Diagram

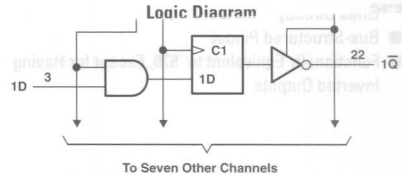

FUNCTION TABLE

INPUTS				OUTPUT
$\overline{OE}$	$\overline{CLR}$	CLK	D	$\overline{Q}$
L	L	↑	X	H
L	H	↑	H	L
L	H	↑	L	H
L	H	L	X	$\overline{Q}_0$
H	X	X	X	Z

RECOMMENDED OPERATING CONDITIONS

PARAMETER	MAX or MIN	ALS	AS	UNIT
I_{CC}	MAX	30	142	mA
I_{OH}	MAX	-2.6	-15	mA
I_{OL}	MAX	24	48	mA

SWITCHING CHARACTERISTICS

PARAMETER		INPUT	OUTPUT	MAX or MIN	ALS	AS
fmax				MIN	30	125
t w				MIN	16.5	4
tsu	DATA				15	2
th	$\overline{CLR}$				0	2
t_{PLH}		CLK	$\overline{Q}$	MAX	14	8
t_{PHL}					14	9
t_{PZH}		$\overline{OE}$	$\overline{Q}$	MAX	18	6
t_{PZL}					18	10
t_{PHZ}		$\overline{OE}$	$\overline{Q}$	MAX	10	6
t_{PLZ}					15	6

UNIT fmax : MHz, other : ns

: OBSOLETED or NOT RECOMMENDED NEW DESIGNS

580

OCTAL D-TYPE TRANSPARENT LATCHES WITH INVERTED OUTPUTS

- 3-State Buffer-Type Outputs Drive Bus Lines Directly
- Inverting-Logic Outputs
- Bus-Structured Pinout

Logic Diagram

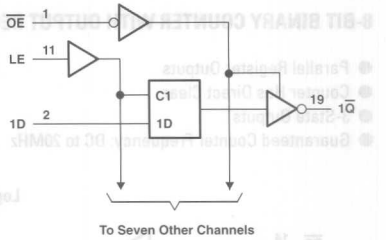

FUNCTION TABLE

INPUTS			OUTPUT
ENABLE			Q
$\overline{OE}$	LE	D	
L	H	H	L
L	H	L	H
L	L	X	$\overline{Q}_0$
H	X	X	Z

RECOMMENDED OPERATING CONDITIONS

PARAMETER	MAX or MIN	ALS	AS	UNIT
I_{CC}	MAX	29	115	mA
I_{OH}	MAX	-2.6	-15	mA
I_{OL}	MAX	24	48	mA

SWITCHING CHARACTERISTICS

PARAMETER		INPUT	OUTPUT	MAX or MIN	ALS	AS
t_w	C			MIN	15	2
t_{su}	C ↓			MIN	10	2
t_h	C ↓			MIN	10	3
t_{PLH}		D	$\overline{Q}$	MAX	18	7.5
t_{PHL}		D	$\overline{Q}$	MAX	14	7
t_{PLH}		LE	$\overline{Q}$	MAX	22	9
t_{PHL}		LE	$\overline{Q}$	MAX	21	8
t_{PZH}		$\overline{OE}$	$\overline{Q}$	MAX	18	6.5
t_{PZL}		$\overline{OE}$	$\overline{Q}$	MAX	18	9.5
t_{PHZ}		$\overline{OE}$	$\overline{Q}$	MAX	10	6.5
t_{PLZ}		$\overline{OE}$	$\overline{Q}$	MAX	15	7

UNIT: ns

PRODUCTION DATA information is current as of publication date. Products conform to specifications per the terms of Texas Instruments standard warranty. Production processing does not necessarily include testing of all parameters. See www.ti.com/sc/logic for the most current data sheets.

590

8-BIT BINARY COUNTER WITH OUTPUT REGISTER

- Parallel Register Outputs
- Counter Has Direct Clear
- 3-State Outputs
- Guaranteed Counter Frequency: DC to 20MHz

Logic Diagram

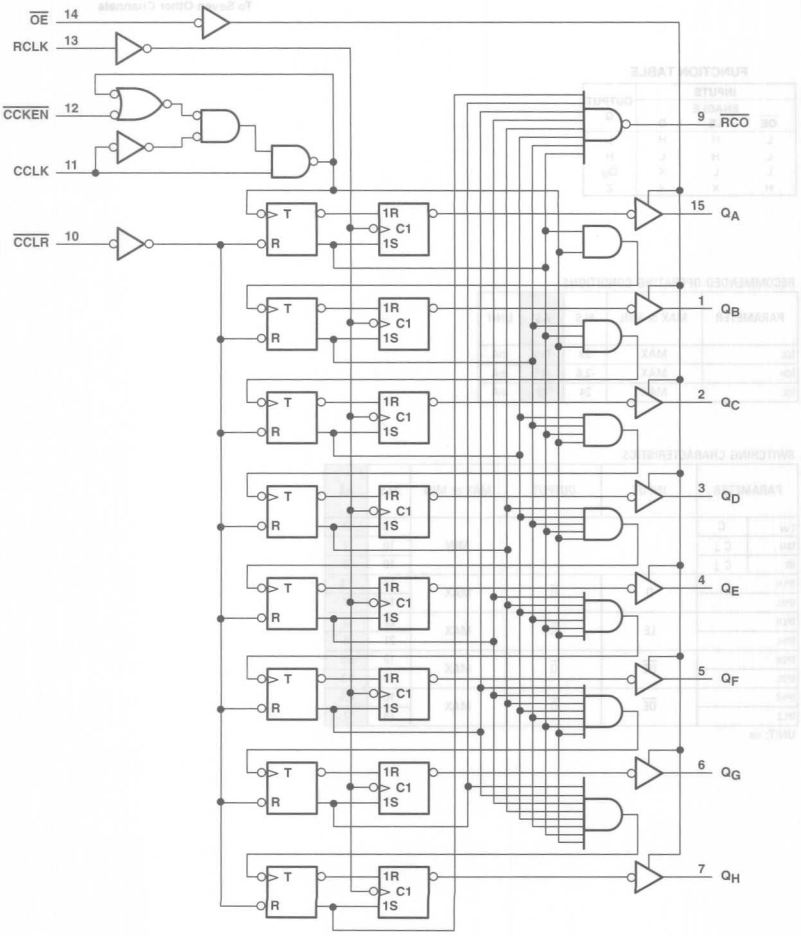

: OBSOLETED or NOT RECOMMENDED NEW DESIGNS

RECOMMENDED OPERATING CONDITIONS

PARAMETER		MAX or MIN	LS	SN74 HC	UNIT
I_{CC}		MAX	65	0.08	mA
I_{OH}	$\overline{RCO}$	MAX	-1	-4	mA
	Q	MAX	-2.6	-6	mA
I_{OL}	$\overline{RCO}$	MAX	16	4	mA
	Q	MAX	24	6	mA

SWITCHING CHARACTERISTICS

PARAMETER		INPUT	OUTPUT	MAX or MIN	LS	SN74 HC
fmax		CCK	$\overline{RCO}$	MIN	20	13
tw	CCK			MIN	25	31
	$\overline{CCLR}$				20	25
	RCK				20	31
tsu	$\overline{CCLR}$ ↑ bofore CCK ↑			MIN	20	25
	CCK ↑ bofore RCK ↑				40	25
t_{PLH}		CCK ↑	$\overline{RCO}$	MAX	22	45
t_{PHL}					30	45
t_{PLH}		$\overline{CCLR}$ ↓	$\overline{RCO}$	MAX	45	39
t_{PLH}		RCK ↑	Q	MAX	18	42
t_{PHL}					33	42
t_{PZH}		$\overline{G}$ ↓	Q	MAX	38	37
t_{PZL}					45	37
t_{PHZ}		$\overline{G}$ ↑	Q	MAX	30	37
t_{PLZ}					38	37

UNIT fmax : MHz, other : ns

592

8-BIT BINARY COUNTER WITH INPUT REGISTER

- Parallel Register Inputs
- Counter Has Directly Overriding Load and Clear
- Accurate Counter Frequency: DC to 20MHz

Logic Diagram

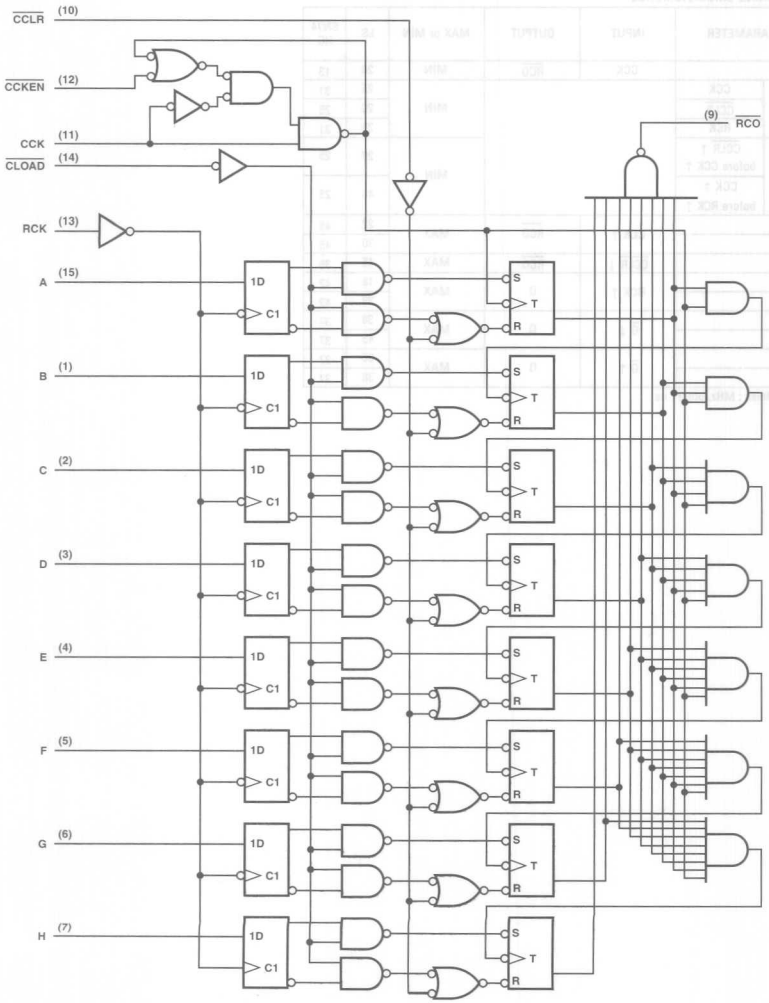

: OBSOLETED or NOT RECOMMENDED NEW DESIGNS

RECOMMENDED OPERATING CONDITIONS

PARAMETER	MAX or MIN	LS	UNIT
I_{CC}	MAX	60	mA
I_{OH}	MAX	-1	mA
I_{OL}	MAX	16	mA

SWITCHING CHARACTERISTICS

PARAMETER		INPUT	OUTPUT	MAX or MIN	LS
fmax		CCK	$\overline{RCO}$	MIN	20
tw	CCK			MIN	25
	$\overline{CCLR}$				20
	RCK				20
	$\overline{CLOAD}$				40
tsu	$\overline{CCLR}$ ↑ bofore CCK ↑			MIN	20
	$\overline{CLOAD}$ ↑ bofore CCK ↑				20
	RCK ↑ bofore $\overline{CLOAD}$ ↑				30
	A to H bofore RCK				20
th				MIN	0
t_{PLH}		CCK ↑	$\overline{RCO}$	MAX	23
t_{PHL}					30
t_{PLH}		$\overline{CLOAD}$ ↓	$\overline{RCO}$	MAX	47
t_{PHL}					17
t_{PLH}		$\overline{CCLR}$ ↓	$\overline{RCO}$	MAX	45
t_{PLH}		RCK ↑	$\overline{RCO}$ Q	MAX	53
t_{PHL}					45

UNIT fmax : MHz, other : ns

Logic Diagram

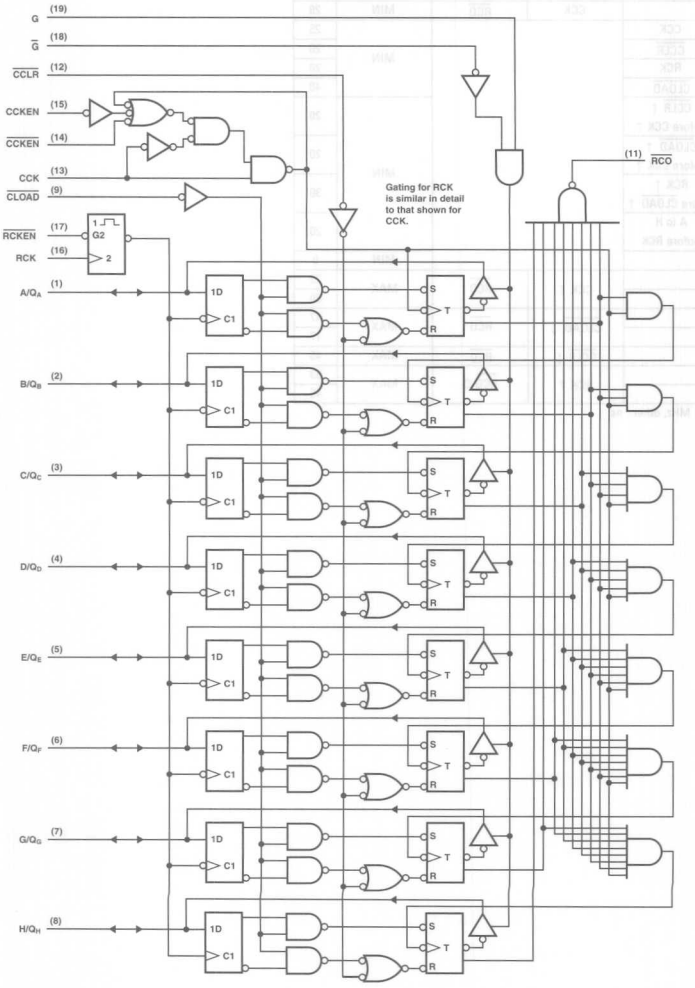

: OBSOLETED or NOT RECOMMENDED NEW DESIGNS

RECOMMENDED OPERATING CONDITIONS

PARAMETER		MAX or MIN	LS	ACT 11	UNIT
I_{CC}		MAX	85	0.08	mA
I_{OH}	$\overline{RCO}$	MAX	-1	-24	mA
	Q	MAX	-2.6	-24	mA
I_{OL}	$\overline{RCO}$	MAX	16	24	mA
	Q	MAX	24	24	mA

SWITCHING CHARACTERISTICS

PARAMETER		INPUT	OUTPUT	MAX or MIN	LS	ACT 11
fmax		CCK	$\overline{RCO}$	MIN	20	52
tw	CCK			MIN	25	9.6
	$\overline{CCLR}$				20	7.6
	RCK				20	5.8
	$\overline{CLOAD}$				40	6.2
tsu	$\overline{CCLR}$ ↑ bofore CCK ↑			MIN	20	1.2
	$\overline{CLOAD}$ ↑ bofore CCK ↑				20	5.1
	RCK ↑ bofore $\overline{CLOAD}$ ↑				30	7.4
	A to H bofore RCK				20	2.4
th				MIN	0	0.8
t_{PLH}		CCK ↑	Q	MAX	21	15.1
t_{PHL}					39	15
t_{PLH}		$\overline{CLOAD}$ ↓	Q	MAX	51	19.1
t_{PHL}					42	21.7
t_{PHL}		$\overline{CCLR}$ ↓	Q	MAX	38	16

UNIT fmax : MHz, other : ns

594

8-BIT SHIFT REGISTER WITH OUTPUT LATCHE

- 8-Bit Serial-In, Parallel-Out Shift Registers with Storage
- Independent Direct Overriding Clears on Shift and Storage Registers
- Independent Clocks for Shift and Storage Registers
- Guaranteed Shift Frequency: DC to 20MHz

Logic Diagram

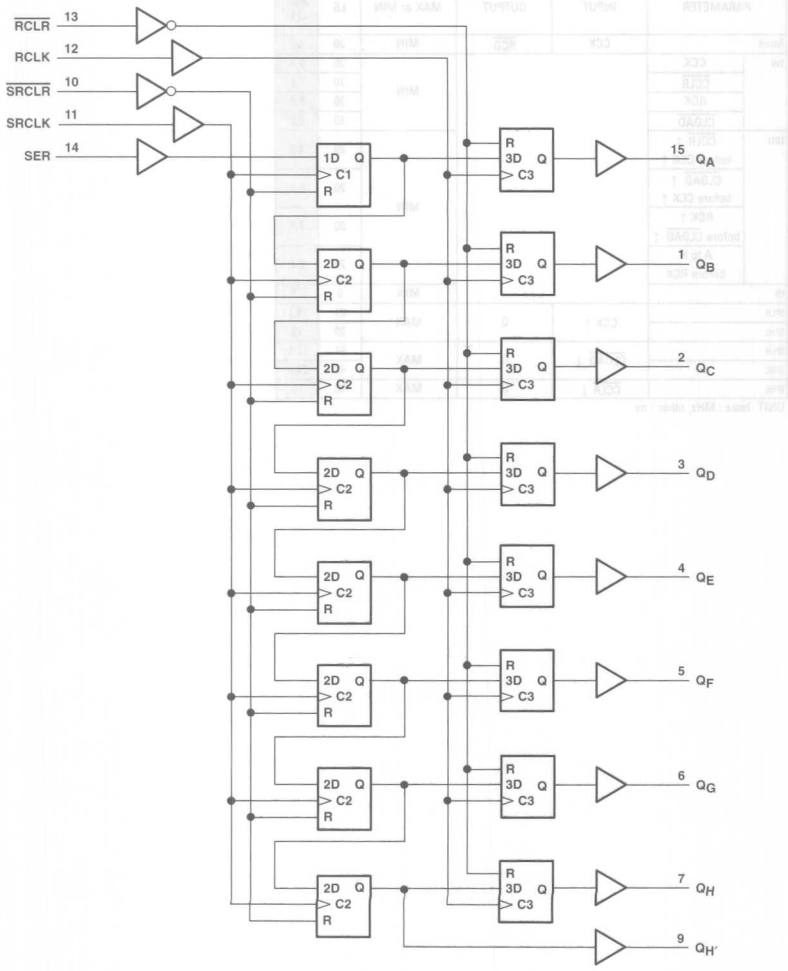

: OBSOLETED or NOT RECOMMENDED NEW DESIGNS

RECOMMENDED OPERATING CONDITIONS

SWITCHING CHARACTERISTICS

PARAMETER		INPUT	OUTPUT	MAX or MIN	LS	SN74 HC	AHC	AHCT	LV 3V	LV 5V
tw	SRCK			MIN	25	20	5	5.5	5.5	5
	RCK				20	20	5	5.5	5.5	5
tsu	$\overline{SRCLR}$ ↑ to SRCK ↑			MIN	20	10	3.3	3.3	4.8	3.3
	SER to SRCK ↑				20	22	3	3	3.5	3
	SRCK ↑ to RCK ↑				40	22	5	5	8.5	5
	$\overline{SRCLR}$ ↓ to RCK ↑				40	13	5	5	9	5
	$\overline{RCLR}$ ↑ to RCK ↑				20	5	3.7	3.8	5.3	3.7
th				MIN	0	5	2	2	1.5	2
t_{PLH}		SRCK ↑	$\overline{QH'}$	MAX	18	37	9.1	9.1	12.4	9.1
t_{PHL}					23	37	10.1	10.1	13.9	10.1
t_{PLH}		RCK ↑	QA to $\overline{QH}$	MAX	18	37	8.3	8.3	11.1	8.3
t_{PHL}					30	37	9.7	9.7	13.1	9.7
t_{PHL}		$\overline{SRCLR}$ ↓	$\overline{QH'}$	MAX	33	37	10.7	10.1	14	10.1
t_{PHL}		$\overline{RCLR}$ ↓	QA to $\overline{QH}$		57	31	10.1	10.7	14.4	10.7

UNIT: ns

595

8-BIT SHIFT REGISTER WITH OUTPUT LATCHE

- 8-Bit Serial-In, Parallel-Out Shift Registers with Storage
- 3-State Outputs
- Shift Register Has Direct Clear
- Accurate Shift Frequency: DC to 20MHz

Logic Diagram

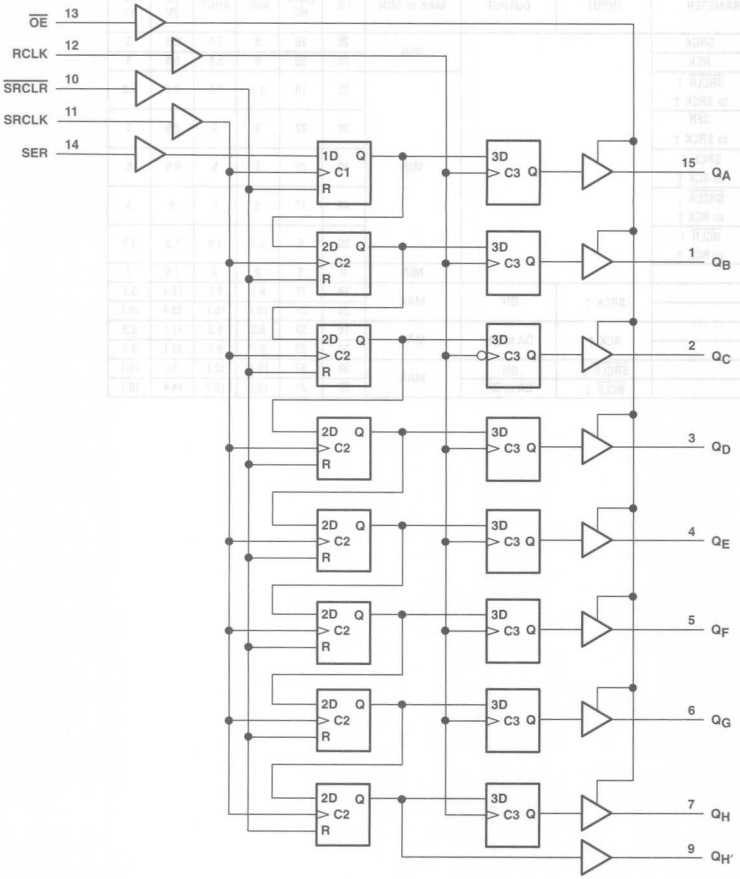

: OBSOLETED or NOT RECOMMENDED NEW DESIGNS

RECOMMENDED OPERATING CONDITIONS

PARAMETER		MAX or MIN	LS	SN74 HC	AHC	AHCT	LV 3V	LV 5V	UNIT
I_{CC}		MAX	65	0.08	0.04	0.04	-	0.02	mA
I_{OH}	QH'	MAX	-1	-4	-8	-8	-8	-16	mA
	QA to QH	MAX	-26	-6	-8	-8	-8	-16	mA
I_{OL}	QH'	MAX	16	4	8	8	8	16	mA
	QA to QH	MAX	24	6	8	8	8	16	mA

SWITCHING CHARACTERISTICS

PARAMETER		INPUT	OUTPUT	MAX or MIN	LS	HC	AHC	AHCT	LV 3V	LV 5V
tw	SRCK			MIN	25	20	5	5.5	5.5	5
	RCK				20	20	5	5.5	5.5	5
tsu	$\overline{\text{SRCLR}}$ ↑ to SRCK ↑			MIN	20	12	2.5	3.8	3	2.5
	SER to SRCK ↑				20	25	3	3	3.5	3
	SRCK ↑ to RCK ↑				40	19	5	5	8.5	5
	$\overline{\text{SRCLR}}$ ↓ to RCK ↑				40	13	5	5	9	5
th				MIN	0	0	2	2	1.5	2
t_{PLH}		SRCK ↑	QH'	MAX	18	40	11.4	11.4	18.5	11.4
t_{PHL}					25	40	11.4	11.4	18.5	11.4
t_{PLH}		RCK ↑	QA to QH	MAX	18	37	10.5	10.5	17	10.5
t_{PHL}					35	37	10.5	10.5	17	10.5
t_{PHL}		$\overline{\text{SRCLR}}$ ↓	QH'	MAX	35	44	11.1	11.1	17.2	11.1

UNIT: ns

596

8-BIT SHIFT REGISTER WITH OUTPUT LATCHE

- 8-Bit Serial-In, Parallel-Out Shift Registers with Storage
- Open-Collector Parallel Outputs
- Shift Register Has Direct Clear
- Accurate Shift Frequency: DC to 20MHz

Logic Diagram

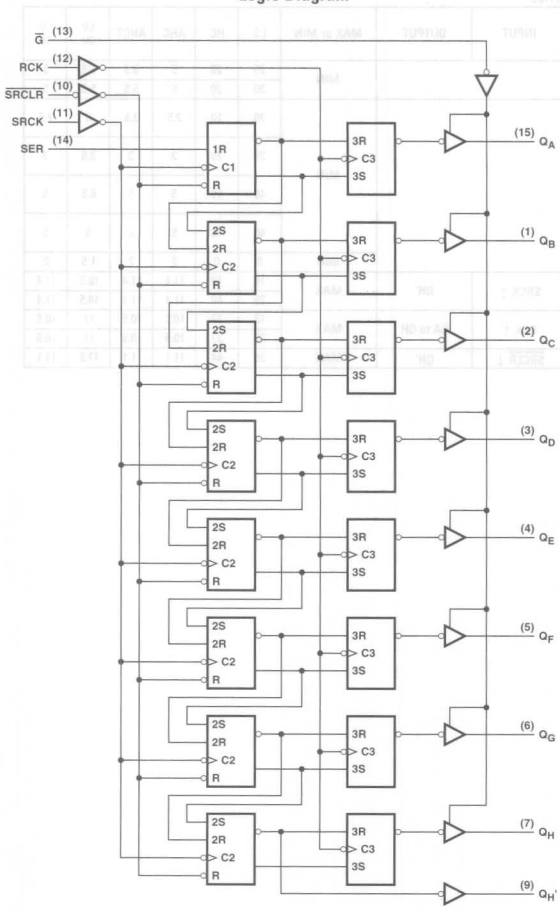

: OBSOLETED or NOT RECOMMENDED NEW DESIGNS

RECOMMENDED OPERATING CONDITIONS

PARAMETER		MAX or MIN	LS	UNIT
I_{CC}		MAX	55	mA
I_{OH}	$\overline{QH'}$	MAX	16	mA
	Q	MAX	24	mA
I_{OL}	$\overline{QH'}$	MAX	-1	mA
V_{OH}	QA to QH	MAX	5.5	V

SWITCHING CHARACTERISTICS

PARAMETER		INPUT	OUTPUT	MAX or MIN	LS
tw	SRCK			MIN	25
	RCK				20
tsu	$\overline{SRCLR}$ ↑ to SRCK ↑			MIN	20
	SER to SRCK ↑				20
	SRCK ↑ to RCK ↑				40
	$\overline{SRCLR}$ ↓ to RCK ↑				40
th				MIN	0
t_{PLH}	SRCK ↑		$\overline{QH'}$	MAX	21
t_{PHL}					30
t_{PLH}	RCK ↑		QA to QH	MAX	42
t_{PHL}					35
t_{PHL}	$\overline{SRCLR}$ ↓		$\overline{QH'}$	MAX	35

UNIT: ns

597

8-BIT SHIFT REGISTER WITH INPUT LATCHE

- 8-Bit Parallel Storage Registers Inputs
- Shift Register Has Direct Overriding Load and Clear
- Accurate Shift Frequency: DC to 20MHz

Logic Diagram

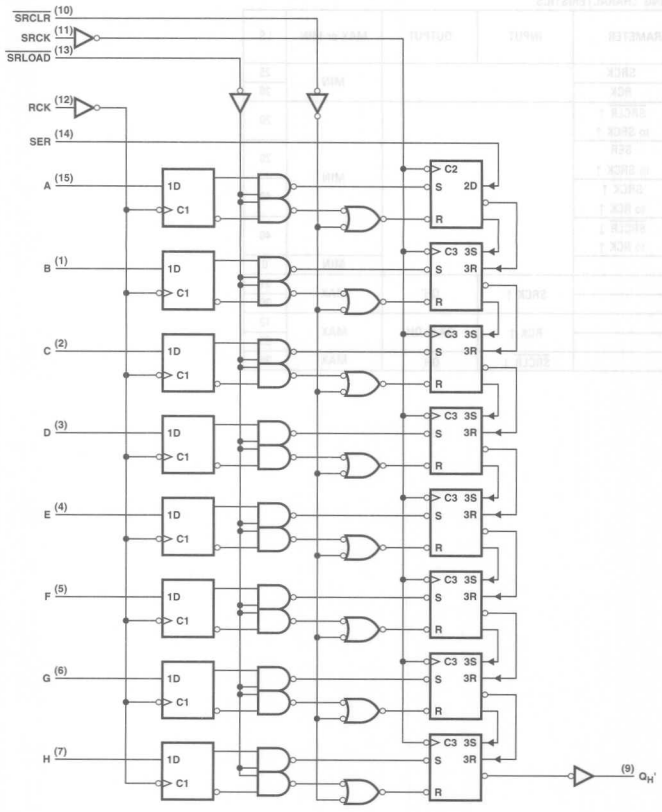

: OBSOLETED or NOT RECOMMENDED NEW DESIGNS

RECOMMENDED OPERATING CONDITIONS

PARAMETER	MAX or MIN	LS	CD74 HC	CD74 HCT	UNIT
I_{CC}	MAX	53	0.16	0.16	mA
I_{OH}	MAX	-1	-4	-4	mA
I_{OL}	MAX	16	4	4	mA

SWITCHING CHARACTERISTICS

PARAMETER		INPUT	OUTPUT	MAX or MIN	LS	CD74 HC	CD74 HCT
fmax		SRCK			20	20	16
tw	SRCK			MIN	35	24	30
	RCK				20	18	20
	$\overline{SRCLR}$			MIN	20	24	27
	$\overline{SRLOAD}$				40	21	24
tsu	$\overline{SRCLR}$ ↑ to SRCK ↑			MIN	25	-	-
	$\overline{SRLOAD}$ ↑ to SRCK ↑				30	-	-
	RCK ↑ to $\overline{SRLOAD}$ ↑			MIN	40	-	-
	SER to SRCK ↑				20	15	15
	DATA to RCK ↑			MIN	20	15	15
th				MIN	0	3	3
t_{PLH}		SRCK ↑	Q_H'	MAX	23	53	57
t_{PHL}					30	53	57
t_{PLH}		$\overline{SRLOAD}$ ↓	Q_H'	MAX	57	60	72
t_{PHL}					44	60	72
t_{PHL}		$\overline{SRCLR}$ ↓	Q_H'	MAX	36	53	66
t_{PLH}		RCK ↑	Q_H'	MAX	60	72	84
t_{PHL}					48	72	84

UNIT fmax : MHz, other : ns

Logic Diagram

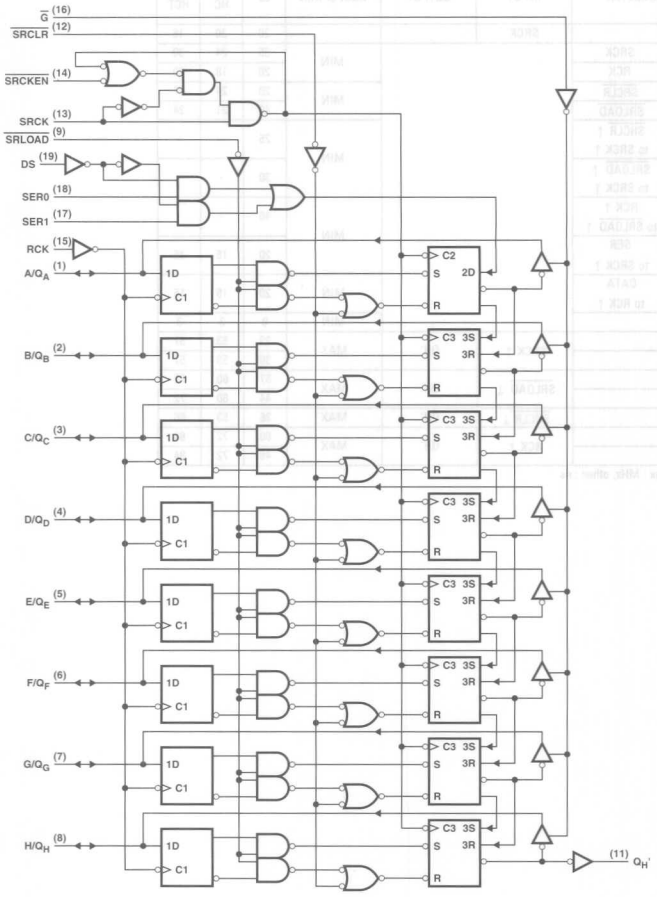

: OBSOLETED or NOT RECOMMENDED NEW DESIGNS

RECOMMENDED OPERATING CONDITIONS

SWITCHING CHARACTERISTICS

PARAMETER	INPUT	OUTPUT	MAX or MIN	LS
f_{max}	SRCK		MIN	20
t_{PLH}	SRCK ↑	$\overline{QH'}$	MAX	17
t_{PHL}				23
t_{PLH}	$\overline{SRLOAD}$ ↓	$\overline{QH'}$	MAX	42
t_{PHL}				30
t_{PHL}	$\overline{SRCLR}$ ↓	$\overline{QH'}$	MAX	27
t_{PLH}	RCK ↑	$\overline{QH'}$	MAX	48
t_{PHL}				36
t_{PLH}	SRCK ↑	Q	MAX	18
t_{PHL}				28
t_{PLH}	$\overline{SRLOAD}$ ↓	Q	MAX	48
t_{PHL}				40
t_{PHL}	$\overline{SRCLR}$ ↓	Q	MAX	38
t_{PZH}	$\overline{G}$ ↓	Q	MAX	31
t_{PZL}				43
t_{PHZ}	$\overline{G}$ ↑	Q	MAX	38
t_{PLZ}				30

UNIT f_{max} : MHz, other : ns

620

OCTAL BUS TRANSCEIVERS

- Local Bus-Latch Capability
- 3-State Inverting Outputs
- 74AC11xxx: Product Available in Reduced-Noise Advanced CMOS (11000 Series)
- 74ACT11xxx: Product Available in Reduced-Noise Advanced CMOS (11000 Series)

Logic Diagram

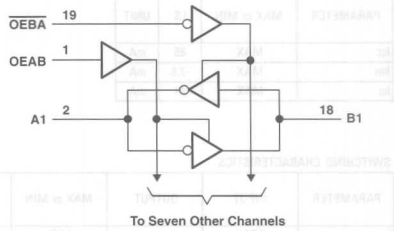

FUNCTION TABLE

ENABLE INPUTS		OPERATION
$\overline{OEBA}$	OEAB	
L	L	$\overline{B}$ data to Abus
H	H	$\overline{A}$ data to B bus
H	L	Isoration
L	H	$\overline{B}$ data to Abus $\overline{A}$ data to B bus

RECOMMENDED OPERATING CONDITIONS

PARAMETER	MAX or MIN	LS	ALS	AS	SN74 HC	SN74 BCT	ABT	AC 11	ACT 11	UNIT
I_{CCZ}	MAX	95	47	77	0.08	10	0.25	0.08	0.008	mA
I_{CCL}	MAX	90	44	122	0.08	84	30	0.08	0.008	mA
I_{OH} (A port)	MAX	-15	-15	-15	-6	-3	-32	-24	-24	mA
I_{OH} (B port)	MAX	-15	-15	-15	-6	-15	-32	-24	-24	mA
I_{OL} (A port)	MAX	24	24	64	6	24	64	24	24	mA
I_{OL} (B port)	MAX	24	24	64	6	64	64	24	24	mA
I_{OL}*	MAX	-	48	-	-	-	-	-	-	mA

*620-1

SWITCHING CHARACTERISTICS

PARAMETER	INPUT	OUTPUT	MAX or MIN	LS	ALS	AS	SN74 HC	SN74 BCT	ABT	AC 11	ACT 11
t_{PLH}	A	B	MAX	10	10	7	26	5.8	4.8	7.4	9.4
t_{PHL}				15	10	6	26	3.6	4.8	7.1	8.6
t_{PLH}	B	A	MAX	10	10	7	26	6.9	4.8	7.4	9.4
t_{PHL}				15	10	6	26	3.9	4.8	7.1	8.6
t_{PZH}	$\overline{OEBA}$	A	MAX	40	17	8	53	10.6	5.5	8.9	10.3
t_{PZL}				40	25	9	53	11.1	7.1	8.5	10.1
t_{PHZ}	$\overline{OEBA}$	A	MAX	25	12	6	38	10	7	8.1	10.4
t_{PLZ}				25	18	12	38	7.8	5.8	8.7	10.9
t_{PZH}	OEAB	B	MAX	40	18	8	53	7.4	6.8	8.8	11.3
t_{PZL}				40	25	9	53	9	6.4	8.8	11
t_{PHZ}	OEAB	B	MAX	25	12	6	38	8.1	6.5	8.2	9.4
t_{PLZ}				25	18	13	38	5.9	5.6	8.6	9.6

UNIT: ns

: OBSOLETED or NOT RECOMMENDED NEW DESIGNS

621

OCTAL BUS TRANSCEIVERS

- Local Bus-Latch Capability
- Open-Collector True Outputs
- Schmitt-Triggered Inputs (SN74LS621)

Logic Diagram

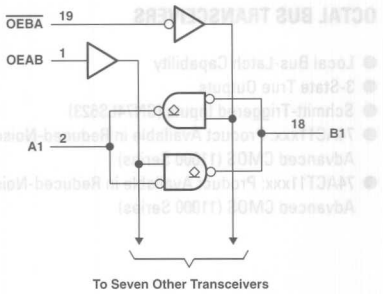

FUNCTION TABLE

ENABLE INPUTS		OPERATION
$\overline{OEBA}$	OEAB	
L	L	B data to Abus
H	H	A data to B bus
H	L	Isoration
L	H	B data to Abus A data to B bus

RECOMMENDED OPERATING CONDITIONS

PARAMETER	MAX or MIN	LS	ALS	ALS A-1	AS	UNIT
I_{CC}	MAX	90	48	48	189	mA
V_{OH}	MAX	5.5	5.5	5.5	5.5	V
I_{OL}	MAX	24	24	48	64	mA

SWITCHING CHARACTERISTICS

PARAMETER	INPUT	OUTPUT	MAX or MIN	LS	ALS	ALS A-1	AS
t_{PLH}	A	B	MAX	25	33	33	24
t_{PHL}				25	20	20	21
t_{PLH}	B	A	MAX	25	33	33	7.5
t_{PHL}				25	20	20	7.5
t_{PLH}	$\overline{OEBA}$	A	MAX	40	39	39	21
t_{PHL}				50	35	35	9
t_{PLH}	OEAB	B	MAX	40	39	39	22
t_{PHL}				50	35	35	10

UNIT: ns

PRODUCTION DATA information is current as of publication date. Products conform to specifications per the terms of Texas Instruments standard warranty. Production processing does not necessarily include testing of all parameters. See www.ti.com/sc/logic for the most current data sheets.

623

- 74AC11xxx: Product Available in Reduced-Noise Advanced CMOS (11000 Series)
- 74ACT11xxx: Product Available in Reduced-Noise Advanced CMOS (11000 Series)

Logic Diagram

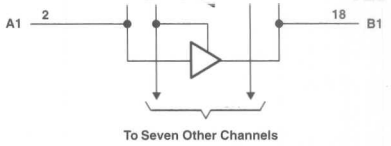

FUNCTION TABLE

ENABLE INPUTS		OPERATION
$\overline{OEBA}$	OEAB	
L	L	B data to Abus
H	H	A data to B bus
H	L	Isoration
L	H	B data to Abus A data to B bus

RECOMMENDED OPERATING CONDITIONS

PARAMETER	MAX or MIN	LS	ALS	AS	F	SN74 HC	SN74 HCT	SN74 BCT	ABT	AC 11	ACT 11	CD74 AC	CD74 ACT	UNIT
I_{CCZ}	MAX	95	55	116	130	0.08	0.08	11	0.25	0.08	0.04	0.16	0.16	mA
I_{CCL}	MAX	90	50	189	140	0.08	0.08	92	30	0.08	0.04	0.16	0.16	mA
I_{OH} (A port)	MAX	-15	-15	-15	-3	-6	-6	-3	-32	-24	-24	-24	-24	mA
I_{OH} (B port)	MAX	-15	-15	-15	-15	-6	-6	-15	-32	-24	-24	-24	-24	mA
I_{OL} (A port)	MAX	24	24	64	24	6	6	24	64	24	24	24	24	mA
I_{OL} (B port)	MAX	24	24	64	64	6	6	64	64	24	24	24	24	mA

SWITCHING CHARACTERISTICS

PARAMETER	INPUT	OUTPUT	MAX or MIN	LS	ALS	AS	F	SN74 HC	SN74 HCT	SN74 BCT	ABT	AC 11	ACT 11	CD74 AC	CD74 ACT
t_{PLH}	A	B	MAX	15	13	9	6.5	26	28	5.2	4.6	7.8	8.5	9.6	10.6
t_{PHL}				15	11	8	7.5	26	28	7.4	4.6	7.1	7.9	9.6	10.6
t_{PLH}	B	A	MAX	15	13	9	6.5	26	28	6.7	4.6	7.8	8.5	9.6	10.6
t_{PHL}				15	11	8.5	7.5	26	28	8	4.6	7.1	7.9	9.6	10.6
t_{PZH}	$\overline{OEBA}$	A	MAX	40	22	11	12	53	53	10.6	7.5	9	9.7	13.4	14.4
t_{PZL}				40	22	10	10	53	53	10.7	7.5	9.1	10	13.4	14.4
t_{PHZ}	$\overline{OEBA}$	A	MAX	25	16	7.5	7.5	38	38	9.8	7.5	8.3	10.9	13.4	14.4
t_{PLZ}				25	19	11.5	7	38	38	7.8	7.5	8.8	11.5	13.4	14.4
t_{PZH}	OEAB	B	MAX	40	22	11.5	11.5	53	53	7.6	7.5	9.2	10.7	13.4	14.4
t_{PZL}				40	22	11	9.5	53	53	8.9	7.5	9.4	10.9	13.4	14.4
t_{PHZ}	OEAB	B	MAX	25	16	7	10	38	38	7.7	7.5	8.3	9.5	13.4	14.4
t_{PLZ}				25	19	9	10	38	38	7.1	7.5	8.8	10	13.4	14.4

UNIT: ns

: OBSOLETED or NOT RECOMMENDED NEW DESIGNS

624

VOLTAGE-CONTROLLED OSCILLATOR

- This Voltage Oscillators (VCOs) is Improved Versions of The Original VCO Family: SN74124, 324, 325, 326, 327
- Separate Supply Voltage Pins for Isolation of Frequency Control Inputs and Oscillators from Outputs Circuitry
- Highly Stable Operation over Specified Temperature and / or Supply Voltage Ranges

Logic Diagram

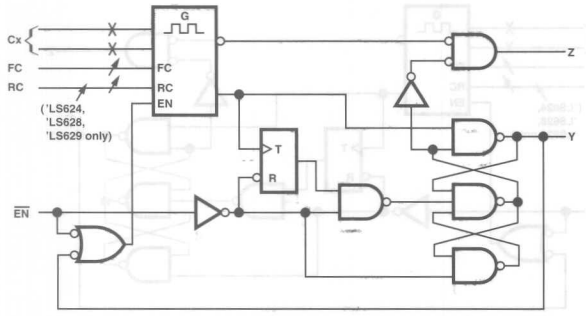

RECOMMENDED OPERATING CONDITIONS

PARAMETER	MAX or MIN	LS	UNIT
I_{CC}	MAX	35	mA
I_{OL}	MAX	24	mA
I_{OH}	MAX	-1.2	mA

SWITCHING CHARACTERISTICS

PARAMETER	MAX or MIN	LS
fo	MAX	25

UNIT: MHz

628

VOLTAGE-CONTROLLED OSCILLATOR

- This Voltage Oscillators (VCOs) is Improved Versions of The Original VCO Family: SN74124, 324, 325, 326, 327
- Separate Supply Voltage Pins for Isolation of Frequency Control Inputs and Oscillators from Outputs Circuitry
- Highly Stable Operation over Specified Temperature and / or Supply Voltage Ranges
- Two Rexternal Pins Can Offer More Precise Temprature Compensation

Logic Diagram

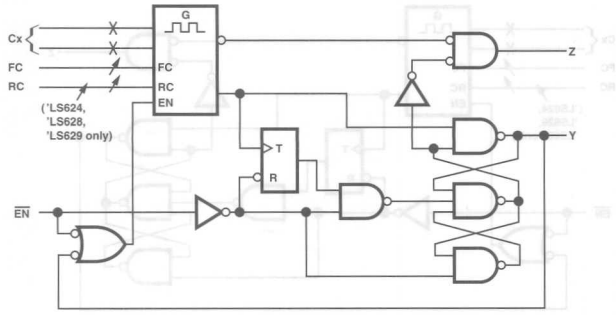

RECOMMENDED OPERATING CONDITIONS

PARAMETER	MAX or MIN	LS	UNIT
I_{CC}	MAX	35	mA
I_{OH}	MAX	-1.2	mA
I_{OL}	MAX	24	mA

SWITCHING CHARACTERISTICS

PARAMETER	MAX or MIN	LS
fo	MAX	25

UNIT: MHz

: OBSOLETED or NOT RECOMMENDED NEW DESIGNS

629

VOLTAGE-CONTROLLED OSCILLATOR

- This Voltage Oscillators (VCOs) is Improved Versions of The Original VCO Family: SN74124, 324, 325, 326, 327
- Separate Supply Voltage Pins for Isolation of Frequency Control Inputs and Oscillators from Outputs Circuitry
- Highly Stable Operation over Specified Temperature and / or Supply Voltage Ranges

Logic Diagram

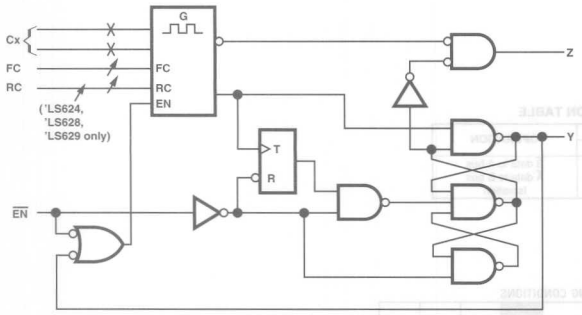

RECOMMENDED OPERATING CONDITIONS

PARAMETER	MAX or MIN	LS	UNIT
I_{CC}	MAX	55	mA
I_{OH}	MAX	-1.2	mA
I_{OL}	MAX	24	mA

SWITCHING CHARACTERISTICS

PARAMETER	MAX or MIN	LS
f_O	MAX	25

UNIT: MHz

638

OCTAL BUS TRANSCEIVERS

- Bidirectional Bus Tranceivers
- Inverting Logic
- Outputs A-Bus: Open-Collector 3-State
- Schmitt-Triggered Inputs (SN74LS638)

Logic Diagram

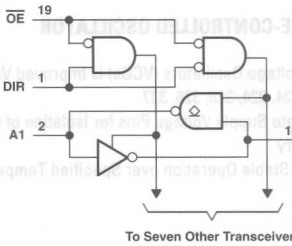

FUNCTION TABLE

CONTROL INPUTS		OPERATION
$\overline{OE}$	DIR	
L	L	$\overline{B}$ data to A bus
L	H	$\overline{A}$ data to B bus
H	X	Isoration

RECOMMENDED OPERATING CONDITIONS

PARAMETER	MAX or MIN	LS	ALS	AS	UNIT
I_{CCZ}	MAX	95	30	61	mA
I_{CCL}	MAX	90	41	122	mA
I_{OH} (B)	MAX	-15	-15	-15	mA
V_{OH} (A)	MAX	5.5	5.5	5.5	V
I_{OL}	MAX	24	24	64	mA
I_{OL}*	MAX	-	48	-	mA

*638-1

SWITCHING CHARACTERISTICS

PARAMETER	INPUT	OUTPUT	MAX or MIN	LS	ALS	AS
t_{PLH}	A	B	MAX	10	12	7
t_{PHL}				15	12	6.5
t_{PLH}	B	A	MAX	25	25	20
t_{PHL}				25	30	7
t_{PLH}	$\overline{OE}$	A	MAX	40	25	19
t_{PHL}				60	45	9
t_{PZH}	$\overline{OE}$	B	MAX	40	20	8
t_{PZL}				40	22	10
t_{PHZ}	$\overline{OE}$	B	MAX	25	10	7
t_{PLZ}				25	15	10

UNIT: ns

: OBSOLETED or NOT RECOMMENDED NEW DESIGNS

639

- Schmitt-Triggered Inputs (SN74LS638)

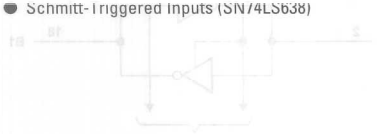

Logic Diagram

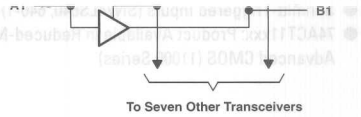

FUNCTION TABLE

CONTROL INPUTS		OPERATION
$\overline{OE}$	DIR	
L	L	B data to A bus
L	H	A data to B bus
H	X	Isoration

RECOMMENDED OPERATING CONDITIONS

PARAMETER	MAX or MIN	LS	ALS	AS	UNIT
I_{CCZ}	MAX	95	54	100	mA
I_{CCL}	MAX	90	50	154	mA
I_{OH} (B)	MAX	-15	-15	-15	mA
V_{OH} (A)	MAX	5.5	5.5	5.5	V
I_{OL}	MAX	24	24	64	mA
I_{OL}*	MAX	-	48	-	mA

*639-1

SWITCHING CHARACTERISTICS

PARAMETER	INPUT	OUTPUT	MAX or MIN	LS	ALS	AS
t_{PLH}	A	B	MAX	15	12	9.5
t_{PHL}				15	12	9
t_{PLH}	B	A	MAX	25	30	22
t_{PHL}				25	22	9
t_{PLH}	$\overline{OE}$	A	MAX	40	30	21.5
t_{PHL}				50	35	11.5
t_{PZH}	$\overline{OE}$	B	MAX	40	21	10.5
t_{PZL}				40	25	10.5
t_{PHZ}	$\overline{OE}$	B	MAX	25	10	7
t_{PLZ}				25	16	10.5

UNIT: ns

PRODUCTION DATA information is current as of publication date. Products conform to specifications per the terms of Texas Instruments standard warranty. Production processing does not necessarily include testing of all parameters. See www.ti.com/sc/logic for the most current data sheets.

640

OCTAL BUS TRANSCEIVERS

- Bidirectional Bus Tranceivers
- Inverting Logic
- 3-State Outputs
- Schmitt-Triggered Inputs (SN74LS640, 640-1)
- 74ACT11xxx: Product Available in Reduced-Noise Advanced CMOS (11000 Series)

Logic Diagram

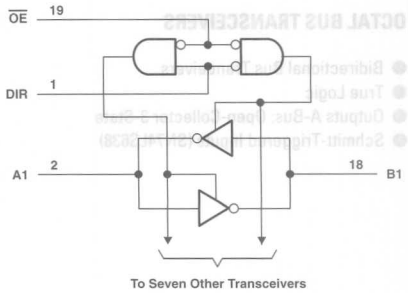

FUNCTION TABLE

CONTROL INPUTS		OPERATION
$\overline{OE}$	DIR	
L	L	$\overline{B}$ data to A bus
L	H	$\overline{A}$ datato B bus
H	X	Isoration

RECOMMENDED OPERATING CONDITIONS

PARAMETER	MAX or MIN	LS	ALS	AS	SN74 HC	CD74 HC	SN74 HCT	CD74 HCT	SN74 BCT	ABT	ACT 11	UNIT
I_{CCZ}	MAX	95	50	80	0.08	0.16	0.08	0.16	11	0.25	0.08	mA
I_{CCL}	MAX	90	55	123	0.08	0.16	0.08	0.16	94	30	0.08	mA
I_{OH} (A port)	MAX	-15	-15	-15	-6	-6	-6	-6	-3	-32	-24	mA
I_{OH} (B port)	MAX	-15	-15	-15	-6	-6	-6	-6	-15	-32	-24	mA
I_{OL} (A port)	MAX	24	24	64	6	6	6	6	24	64	24	mA
I_{OL} (B port)	MAX	24	24	64	6	6	6	6	64	64	24	mA
I_{OL}*	MAX	48	48	-	-	-	-	-	-	-	-	mA

*640-1

SWITCHING CHARACTERISTICS

PARAMETER	INPUT	OUTPUT	MAX or MIN	LS	ALS	AS	SN74 HC	CD74 HC	SN74 HCT	CD74 HCT	SN74 BCT	ABT	ACT 11
t_{PLH}	A	B	MAX	10	11	7	26	27	28	33	6.5	4.9	10.5
t_{PHL}				15	10	6	26	27	28	33	3.7	4.9	9.5
t_{PLH}	B	A	MAX	10	11	7	26	27	28	33	6.5	4.9	10.5
t_{PHL}				15	10	6	26	27	28	33	3.7	4.9	9.5
t_{PZH}	$\overline{OE}$	A	MAX	40	21	8	58	45	58	45	10.2	5.8	13.4
t_{PZL}				40	24	10	58	45	58	45	10.7	7.3	13.6
t_{PHZ}	$\overline{OE}$	A	MAX	25	10	8	38	45	50	45	10.2	6.8	13.9
t_{PLZ}				25	15	13	38	45	50	45	7.8	5.5	14.2
t_{PZH}	$\overline{OE}$	B	MAX	40	21	8	58	45	58	45	10.2	5.8	13.4
t_{PZL}				40	24	10	58	45	58	45	10.7	7.3	13.6
t_{PHZ}	$\overline{OE}$	B	MAX	25	10	8	38	45	50	45	10.2	6.8	13.9
t_{PLZ}				25	15	13	38	45	50	45	7.8	5.5	14.2

UNIT: ns

: OBSOLETED or NOT RECOMMENDED NEW DESIGNS

641

OCTAL BUS TRANSCEIVERS

- Bidirectional Bus Tranceivers
- True Logic
- 3-State Outputs
- Schmitt-Triggered Inputs (SN74LS641)

Logic Diagram

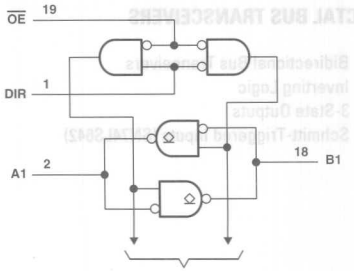

FUNCTION TABLE

CONTROL INPUTS		OPERATION
$\overline{G}$	DIR	
L	L	B data to A bus
L	H	A datato B bus
H	X	Isoration

RECOMMENDED OPERATING CONDITIONS

PARAMETER	MAX or MIN	LS	ALS	AS	UNIT
I_{CCZ}	MAX	95	-	-	mA
I_{CCL}	MAX	90	47	136	mA
V_{OH}	MAX	5.5	5.5	5.5	V
I_{OL}	MAX	24	24	64	mA
I_{OL}*	MAX	48	48	-	mA

*641-1

SWITCHING CHARACTERISTICS

PARAMETER	INPUT	OUTPUT	MAX or MIN	LS	ALS	AS
t_{PLH}	A	B	MAX	25	25	21
t_{PHL}				25	18	7.5
t_{PLH}	B	A	MAX	25	25	21
t_{PHL}				25	18	7.5
t_{PLH}	$\overline{OE}$	A,B	MAX	40	30	21
t_{PHL}				50	30	9
t_{PLH}	DIR	A,B	MAX	40	32	22
t_{PHL}				50	32	10

UNIT: ns

PRODUCTION DATA information is current as of publication date. Products conform to specifications per the terms of Texas Instruments standard warranty. Production processing does not necessarily include testing of all parameters. See www.ti.com/sc/logic for the most current data sheets.

642

- Schmitt-Triggered Inputs (SN74LS642)

Logic Diagram

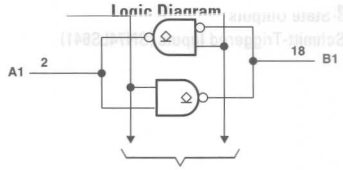

FUNCTION TABLE

CONTROL INPUTS		OPERATION
$\overline{OE}$	DIR	
L	L	$\overline{B}$ data to A bus
L	H	$\overline{A}$ data to B bus
H	X	Isoration

RECOMMENDED OPERATING CONDITIONS

PARAMETER	MAX or MIN	LS	ALS	AS	UNIT
I_{CCZ}	MAX	95	-	-	mA
I_{CCL}	MAX	90	28	104	mA
V_{OH}	MAX	5.5	5.5	5.5	V
I_{OL}	MAX	24	24	64	mA
I_{OL}*	MAX	48	48	-	mA

*642-1

SWITCHING CHARACTERISTICS

PARAMETER	INPUT	OUTPUT	MAX or MIN	LS	ALS	AS
t_{PLH}	A	B	MAX	25	30	24
t_{PHL}				25	22	7.5
t_{PLH}	B	A	MAX	25	30	24
t_{PHL}				25	22	7.5
t_{PLH}	$\overline{OE}$, DIR	A	MAX	40	30	23.5
t_{PHL}				60	38	11.5
t_{PLH}	$\overline{OE}$, DIR	B	MAX	40	30	23.5
t_{PHL}				60	38	11.5

UNIT: ns

: OBSOLETED or NOT RECOMMENDED NEW DESIGNS

645

OCTAL BUS TRANSCEIVERS

- Bidirectional Bus Tranceivers
- True Logic
- 3-State Outputs
- Schmitt-Triggered Inputs (SN74LS645, 645-1)

Logic Diagram

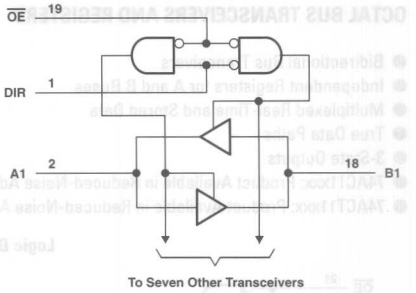

FUNCTION TABLE

CONTROL INPUTS		OPERATION
$\overline{OE}$	DIR	
L	L	B data to A bus
L	H	$\overline{A}$ data to B bus
H	X	Isoration

RECOMMENDED OPERATING CONDITIONS

PARAMETER	MAX or MIN	LS	ALS	AS	SN74 HC	SN74 HCT	UNIT
I_{CCZ}	MAX	95	58	123	0.08	0.08	mA
I_{CCL}	MAX	90	55	149	0.08	0.08	mA
I_{OH}	MAX	-15	-15	-15	-6	-6	mA
I_{OL}	MAX	24	24	64	6	6	mA
I_{OL}*	MAX	48	48	-	-	-	mA

*645-1

SWITCHING CHARACTERISTICS

PARAMETER	INPUT	OUTPUT	MAX or MIN	LS	ALS	AS	SN74 HC	SN74 HCT
t_{PLH}	A	B	MAX	15	10	9.5	26	28
t_{PHL}				15	10	9	26	28
t_{PLH}	B	A	MAX	15	10	9.5	26	28
t_{PHL}				15	10	9	26	28
t_{PZH}	$\overline{OE}$	A	MAX	40	20	11	58	58
t_{PZL}				40	20	10	58	58
t_{PHZ}	$\overline{OE}$	A	MAX	25	10	7	50	50
t_{PLZ}				25	15	12	50	50
t_{PZH}	$\overline{OE}$	B	MAX	40	20	11	58	58
t_{PZL}				40	20	10	58	58
t_{PHZ}	$\overline{OE}$	B	MAX	25	10	7	50	50
t_{PLZ}				25	15	12	50	50

UNIT: ns

PRODUCTION DATA information is current as of publication date. Products conform to specifications per the terms of Texas Instruments standard warranty. Production processing does not necessarily include testing of all parameters. See www.ti.com/sc/logic for the most current data sheets.

OCTAL BUS TRANSCEIVERS AND REGISTERS

- Bidirectional Bus Tranceivers
- Independent Registers for A and B Buses
- Multiplexed Real-Time and Stored Data
- True Data Paths
- 3-State Outputs
- 74AC11xxx: Product Available in Reduced-Noise Advanced CMOS (11000 Series)
- 74ACT11xxx: Product Available in Reduced-Noise Advanced CMOS (11000 Series)

Logic Diagram

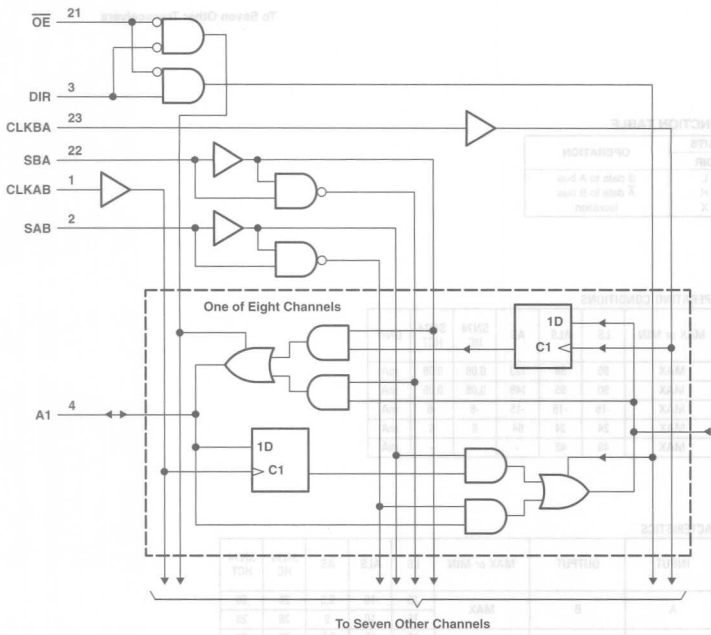

RECOMMENDED OPERATING CONDITIONS

PARAMETER	MAX or MIN	LS	ALS	AS	SN74 HC	CD74 HC	SN74 HCT	CD74 HCT	SN74 BCT	ABT	ABT Ver.A	LVTH 3V	UNIT
I_{CC}	MAX	165	88	211	0.08	0.16	0.08	0.08	67	30	30	5	mA
I_{OH}	MAX	-15	-15	-15	-6	-6	-6	-6	-15	-32	-32	-32	mA
I_{OL}	MAX	24	24	48	6	6	6	6	64	64	64	64	mA
I_{OL}*	MAX	-	48	-	-	-	-	-	-	-	-	-	mA

PARAMETER	MAX or MIN	AC 11	CD74 AC	ACT 11	CD74 ACT	LVC 3V	UNIT
I_{CC}	MAX	0.08	0.08	0.08	0.08	0.01	mA
I_{OH}	MAX	-24	-24	-24	-24	-24	mA
I_{OL}	MAX	24	24	24	24	24	mA
I_{OL}*	MAX	-	-	-	-	-	mA

*646-1

: OBSOLETED or NOT RECOMMENDED NEW DESIGNS

FUNCTION TABLE

INPUTS						DATA I/O†		OPERATION OR FUNCTION
$\overline{OE}$	DIR	CLKAB	CLKBA	SAB	SBA	A1–A8	B1–B8	
H	X	H to L	H to L	X	X	Input	Input	Isolation
H	X	↑	↑	X	X	Input	Input	Store A and B data
L	L	X	X	X	L	Output	Input	Real-time B data to A bus
L	L	X	H to L	X	H	Output	Input	Stored B data to A bus
L	H	X	X	L	X	Input	Output	Real-time A data to B bus
L	H	H to L	X	H	X	Input	Output	Stored A data to B bus

† The data output functions can be enabled or disabled by various signals at OE and DIR. Data input functions are always enabled; i.e., data at the bus terminals is stored on every low-to-high transition of the clock inputs.

SWITCHING CHARACTERISTICS

PARAMETER	INPUT	OUTPUT	MAX or MIN	LS	ALS	AS	SN74 HC	CD74 HC	SN74 HCT	CD74 HCT	SN74 BCT
f_{max}			MIN	-	40	90	27	25	27	20	83
t_w	CLKBA,CLKAB "H"		MIN	15	12.5	5	19	20	19	31	6
	CLKBA,CLKAB "L"			30	12.5	6	19	20	19	31	6
	DATA			30	-	-	-	-	-	-	-
t_{su}	CLKBA,CLKAB "H"		MIN	15	10	6	25	15	25	15	6
	CLKBA,CLKAB "L"			15	10	6	25	15	25	15	6
t_h	CLKBA,CLKAB		MIN	0	0	0	5	9	5	5	0.5
t_{PLH}	CLOCK	A,B	MAX	25	30	8.5	45	55	45	55	11.2
t_{PHL}				35	17	9	45	55	45	55	10.6
t_{PLH}	A,B	B,A	MAX	18	20	9	34	34	34	46	9.5
t_{PHL}				20	12	7	34	34	34	46	10.5
t_{PLH}	SAB,SBA (sored data high)	A,B	MAX	40	25	11	48	43	48	58	13.8
t_{PHL}				35	20	9	48	43	48	58	9.1
t_{PLH}	SAB,SBA (sored data low)	A,B	MAX	50	35	11	48	43	48	58	12
t_{PHL}				25	20	9	48	43	48	58	12.9
t_{PZH}	$\overline{OE}$	A,B	MAX	55	17	9	61	44	61	56	13.2
t_{PZL}				65	20	14	61	44	61	56	14.4
t_{PHZ}	$\overline{OE}$	A,B	MAX	35	10	9	61	44	61	44	10.9
t_{PLZ}				35	16	9	61	44	61	44	10.5
t_{PZH}	DIR	A,B	MAX	45	30	16	61	44	61	56	13.1
t_{PZL}				60	25	18	61	44	61	56	14.6
t_{PHZ}	DIR	A,B	MAX	30	10	10	61	44	61	44	12.6
t_{PLZ}				30	16	10	61	44	61	44	11.8

PARAMETER	INPUT	OUTPUT	MAX or MIN	ABT	ABT A Ver.	LVTH 3V	AC 11	CD74 AC	ACT 11	CD74 ACT	LVC 3V
f_{max}			MIN	125	125	150	100	125	105	110	150
t_w	CLKBA,CLKAB "H"		MIN	4	4	3.3	5	4	4.8	4.5	3.3
	CLKBA,CLKAB "L"			4	4	3.3	5	4	4.8	4.5	3.3
	DATA			-	-	-	-	-	-	-	-
t_{su}	CLKBA,CLKAB "H"		MIN	3.5	3	1.2	4.5	2.5	4.5	2.5	1.5
	CLKBA,CLKAB "L"			3	3	1.6	4.5	2.5	4.5	2.5	1.5
t_h	CLKBA,CLKAB		MIN	0	0	0.8	1	2	2.5	2	1.7
t_{PLH}	CLOCK	A,B	MAX	7.8	5.6	4.7	11	13.5	13.5	15.5	8.4
t_{PHL}				8.4	5.6	4.7	12.2	13.5	14.9	15.5	8.4
t_{PLH}	A,B	B,A	MAX	6.9	4.8	3.5	8.8	11	11.5	12.5	7.4
t_{PHL}				6.9	5.4	3.5	9.8	11	12	12.5	7.4
t_{PLH}	SAB,SBA (sored data high)	A,B	MAX	7.1	6.5	4.9	9.4	12	11.5	14.5	8.6
t_{PHL}				7.9	5.9	4.9	10.7	12	13.5	14.5	8.6
t_{PLH}	SAB,SBA (sored data low)	A,B	MAX	7.1	6.5	4.9	9.9	12	12.4	14.5	8.6
t_{PHL}				7.9	5.9	4.9	11	12	13.1	14.5	8.6
t_{PZH}	$\overline{OE}$	A,B	MAX	6.3	6.3	5.2	12	13.5	14.4	15.5	8.2
t_{PZL}				8.8	8.8	5.2	13.1	13.5	15.3	15.5	8.2
t_{PHZ}	$\overline{OE}$	A,B	MAX	8.3	5	5.5	8.9	13.5	11.6	15.5	7.5
t_{PLZ}				7.5	4.5	5.5	8.3	13.5	10.6	15.5	7.5
t_{PZH}	DIR	A,B	MAX	6.7	6.7	5.2	12.6	13.5	15.3	15.5	8.3
t_{PZL}				9.5	9.5	5.2	13.7	13.5	16.5	15.5	8.3
t_{PHZ}	DIR	A,B	MAX	7.7	5.7	5.6	8.7	13.5	11.3	15.5	7.9
t_{PLZ}				8.2	6	5.6	8.1	13.5	10.3	15.5	7.9

UNIT fmax : MHz other : ns

PRODUCTION DATA information is current as of publication date. Products conform to specifications per the terms of Texas Instruments standard warranty. Production processing does not necessarily include testing of all parameters. See www.ti.com/sc/logic for the most current data sheets.

647

OCTAL BUS TRANSCEIVERS AND REGISTERS

- Bidirectional Bus Tranceivers
- Independent Registers for A and B Buses
- Multiplexed Real-Time and Stored Data
- True Data Paths
- Open-Collector Outputs

Logic Diagram

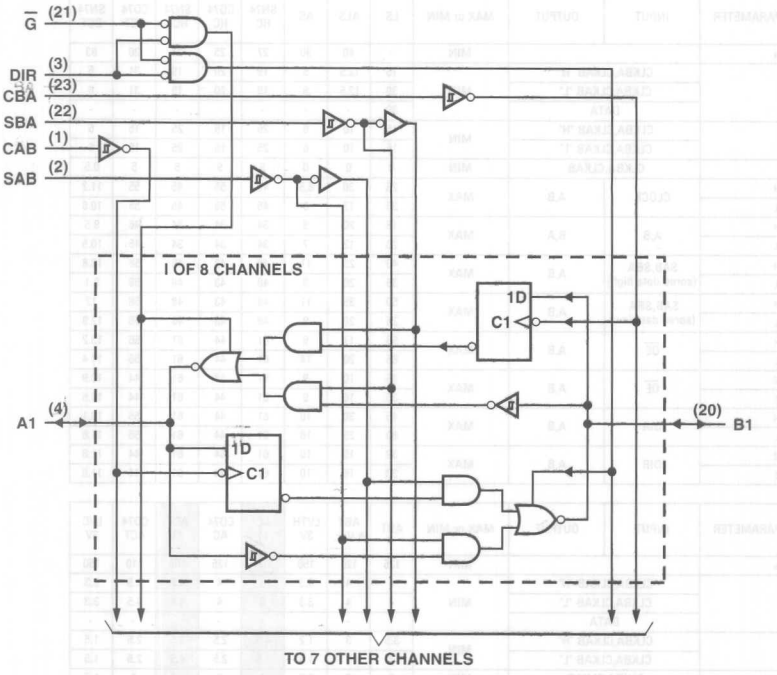

: OBSOLETED or NOT RECOMMENDED NEW DESIGNS

FUNCTION TABLE

INPUTS	DATA I/O†	OPERATION OR FUNCTION

the bus terminals is stored on every low-to-high transition of the clock inputs.

RECOMMENDED OPERATING CONDITIONS

PARAMETER	MAX or MIN	LS	UNIT
I_{CC}	MAX	150	mA
V_{OH}	MAX	5.5	V
I_{OL}	MAX	24	mA

SWITCHING CHARACTERISTICS

PARAMETER	INPUT	OUTPUT	MAX or MIN	LS
t_w			MIN	30
t_{su}	A,B		MIN	15
t_h	A,B		MIN	0
t_{PLH}	CLOCK	A,B	MAX	35
t_{PHL}				45
t_{PLH}	A,B	B,A	MAX	26
t_{PHL}				27
t_{PLH}	SAB,SBA (With Bus Input High)	A,B	MAX	50
t_{PHL}				45
t_{PLH}	SAB,SBA (With Bus Input Low)	A,B	MAX	60
t_{PHL}				30
t_{PLH}	$\overline{G}$	A,B	MAX	40
t_{PHL}				50
t_{PLH}	DIR	A,B	MAX	35
t_{PHL}				40

UNIT: ns

OCTAL BUS TRANSCEIVERS AND REGISTERS

- Bidirectional Bus Tranceivers
- Independent Registers for A and B Buses
- Multiplexed Real-Time and Stored Data
- Inverting Data Paths
- 3-State Outputs

Logic Diagram

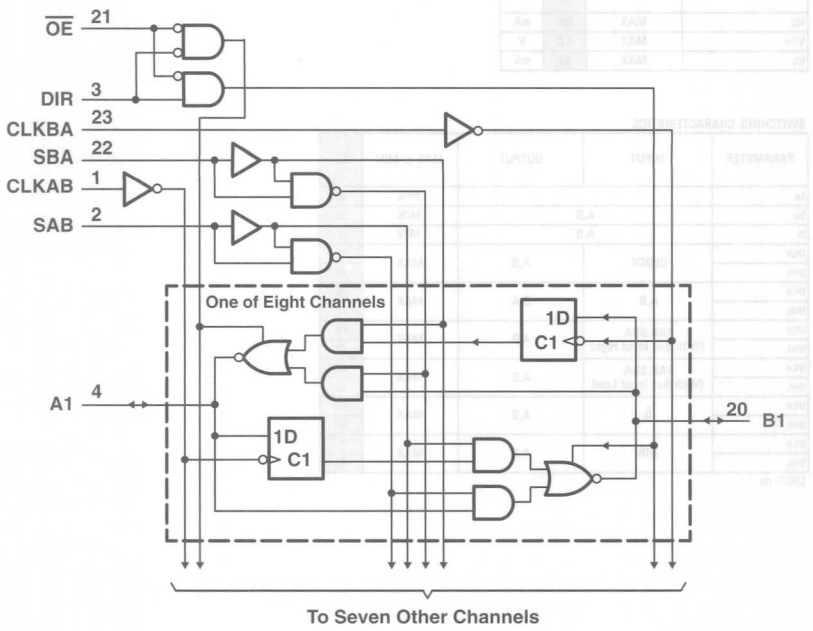

: OBSOLETED or NOT RECOMMENDED NEW DESIGNS

FUNCTION TABLE

INPUTS						DATA I/O†		OPERATION OR FUNCTION
$\overline{OE}$	DIR	CLKAB	CLKBA	SAB	SBA	A1–A8	B1–B8	
H	X	H to L	H to L	X	X	Input	Input	Isolation
H	X	↑	↑	X	X	Input	Input	Store A and B data
L	L	X	X	X	L	Output	Input	Real-time B data to A bus
L	L	X	H to L	X	H	Output	Input	Stored $\overline{B}$ data to A bus
L	H	X	X	L	X	Input	Output	Real-time $\overline{A}$ data to B bus
L	H	H to L	X	H	X	Input	Output	Stored $\overline{A}$ data to B bus

† The data output functions can be enabled or disabled by various signals at OE and DIR. Data input functions are always enabled; i.e., data at the bus terminals is stored on every low-to-high transition of the clock inputs.

RECOMMENDED OPERATING CONDITIONS

PARAMETER	MAX or MIN	LS	ALS	AS	SN74 HC	SN74 HCT	UNIT
I_{CC}	MAX	180	88	195	0.08	0.08	mA
I_{OH}	MAX	-15	-15	-15	-6	-6	mA
I_{OL}	MAX	24	24	48	6	6	mA

SWITCHING CHARACTERISTICS

PARAMETER	INPUT	OUTPUT	MAX or MIN	LS	ALS	AS	SN74 HC	SN74 HCT
f_{max}			MIN	-	40	90	27	27
t_w	CLKAB, CLKBA "H"		MIN	15	12.5	5	19	19
	CLKAB, CLKBA "L"		MIN	30	12.5	6	19	19
	DATA		MIN	30	-	-	-	-
t_{su}	CLKAB, CLKBA		MIN	15	10	6	25	25
t_h	CLKAB, CLKBA		MIN	0	0	0	5	5
t_{PLH}	CLOCK	A,B	MAX	25	33	8.5	45	45
t_{PHL}				40	20	9	45	45
t_{PLH}	A,B	B,A	MAX	18	17	8	34	34
t_{PHL}				25	10	7	34	34
t_{PLH}	SAB,SBA (With Bus Input High)	A,B	MAX	55	25	11	48	48
t_{PHL}				40	21	9	48	48
t_{PLH}	SAB,SBA (With Bus Input Low)	A,B	MAX	40	39	11	48	48
t_{PHL}				40	22	9	48	48
t_{PZH}	$\overline{OE}$	A,B	MAX	50	22	9	61	61
t_{PZL}				55	22	15	61	61
t_{PHZ}	$\overline{OE}$	A,B	MAX	45	10	9	61	61
t_{PLZ}				35	15	9	61	61
t_{PZH}	DIR	A,B	MAX	40	27	16	61	61
t_{PZL}				45	19	18	61	61
t_{PHZ}	DIR	A,B	MAX	35	14	10	61	61
t_{PLZ}				30	15	10	61	61

UNIT fmax : MHz other : ns

- Inverting Data Paths
- 3-State Outputs

Logic Diagram

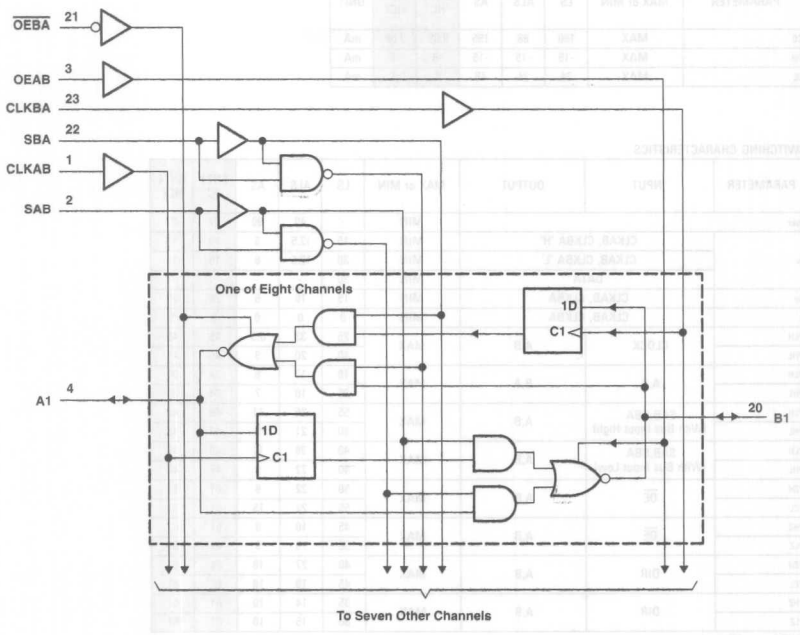

: OBSOLETED or NOT RECOMMENDED NEW DESIGNS

FUNCTION TABLE

INPUTS						DATA I/O		OPERATION OR FUNCTION
OEAB	$\overline{OEBA}$	CLKAB	CLKBA	SAB	SBA	A1–A8	B1–B8	
L	H	H to L	H to L	X	X	Input	Input	Isolation
L	H	↑	↑	X	X	Input	Input	Store A and B data
X	H	↑	H to L	X	X	Input	Unspecified	Store A, hold B
H	H	↑	↑	X	X	Input	Output	Store A in both registers
L	X	H to L	↑	X	X	Unspecified	Input	Hold A, store B
L	L	↑	↑	X	X	Output	Input	Store B in both registers
L	L	X	X	X	L	Output	Input	Real-time $\overline{B}$ data to A bus
L	L	X	H to L	X	H	Output	Input	Stored $\overline{B}$ data to A bus
H	H	X	X	L	X	Input	Output	Real-time $\overline{A}$ data to B bus
H	H	H to L	X	H	X	Input	Output	Stored $\overline{A}$ data to B bus
H	L	H to L	H to L	H	H	Output	Output	Stored $\overline{A}$ data to B bus and stored $\overline{B}$ data to A bus

RECOMMENDED OPERATING CONDITIONS

PARAMETER	MAX or MIN	LS	ALS	AS	SN74 HC	SN74 HCT	SN74 BCT	ABT	CD74 ACT	UNIT
I_{CC}	MAX	165	82	195	0.08	0.08	62	30	160	mA
I_{OH}	MAX	-15	-15	-15	-6	-6	-15	-32	-24	mA
I_{OL}	MAX	24	24	48	6	6	64	64	24	mA
I_{OL}*	MAX	-	48	-	-	-	-	-	-	mA

*651-1

SWITCHING CHARACTERISTICS

PARAMETER	INPUT	OUTPUT	MAX or MIN	LS	ALS	AS	SN74 HC	SN74 HCT	SN74 BCT	ABT	CD74 ACT
f_{max}			MIN	-	40	90	27	20	95	125	110
t_w	CLKBA, CLKAB "H"		MIN	15	12.5	5	19	25	4.8	4	4.5
	CLKBA, CLKAB "L"		MIN	15	12.5	6	19	25	7	4	4.5
	DATA		MIN	15	-	-	-	-	-	-	-
t_{su}	A,B		MIN	15	10	6	25	19	6	3	2.5
t_h	A,B		MIN	0	0	0	5	5	1	0	2
t_{PLH}	CLOCK	A,B	MAX	24	32	8.5	45	45	11.7	5.6	15.5
t_{PHL}				35	17	9	45	45	11.8	5.6	15.5
t_{PLH}	A,B	B,A	MAX	18	18	9	34	34	12.6	6.2	12.5
t_{PHL}				30	10	7	34	34	9.8	5.4	12.5
t_{PLH}	SAB,SBA (With Bus Input High)	A,B	MAX	47	38	11	48	48	9.8	6.5	15.5
t_{PHL}				33	21	9	48	48	15.5	5.9	15.5
t_{PLH}	SAB,SBA (With Bus Input Low)	A,B	MAX	35	25	11	48	48	14.6	6.5	15.5
t_{PHL}				30	21	9	48	48	12.8	5.9	15.5
t_{PZH}	$\overline{OEBA}$	A	MAX	44	20	10	61	61	12	5.8	15.5
t_{PZL}				60	18	16	61	61	13.1	8.5	15.5
t_{PHZ}	$\overline{OEBA}$	A	MAX	38	9	9	61	61	10.2	5	15.5
t_{PLZ}				30	12	9	61	61	9.6	4.1	15.5
t_{PZH}	OEAB	B	MAX	29	22	11	61	61	8.3	6.5	15.5
t_{PZL}				40	21	16	61	61	9.7	7.4	15.5
t_{PHZ}	OEAB	B	MAX	38	12	10	61	61	15	5.5	15.5
t_{PLZ}				30	14	11	61	61	12.3	5.1	15.5

UNIT fmax : MHz other : ns

OCTAL BUS TRANSCEIVERS AND REGISTERS

- Bus Tranceivers / Registers
- Independent Registers and Enables for A and B Buses
- Multiplexed Real-Time and Stored Data
- True Data Paths
- 3-State Outputs
- 74AC11xxx: Product Available in Reduced-Noise Advanced CMOS (11000 Series)
- 74ACT11xxx: Product Available in Reduced-Noise Advanced CMOS (11000 Series)

Logic Diagram

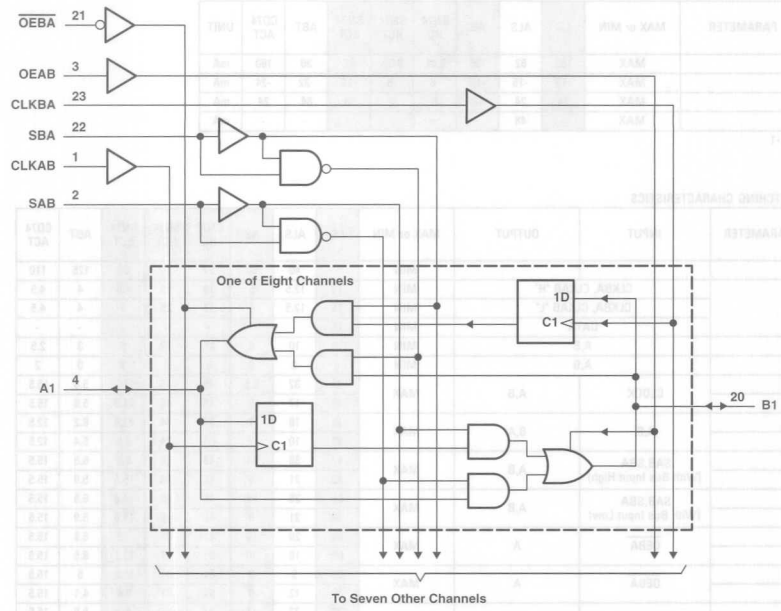

FUNCTION TABLE

INPUTS						DATA I/O		OPERATION OR FUNCTION
OEAB	$\overline{OEBA}$	CLKAB	CLKBA	SAB	SBA	A1–A8	B1–B8	
L	H	H to L	H to L	X	X	Input	Input	Isolation
L	H	↑	↑	X	X	Input	Input	Store A and B data
X	H	↑	H to L	X	X	Input	Unspecified	Store A, hold B
H	H	↑	↑	X	X	Input	Output	Store A in both registers
L	X	H to L	↑	X	X	Unspecified	Input	Hold A, store B
L	L	↑	↑	X	X	Output	Input	Store B in both registers
L	L	X	X	X	L	Output	Input	Real-time $\overline{B}$ data to A bus
L	L	X	H to L	X	H	Output	Input	Stored $\overline{B}$ data to A bus
H	H	X	X	L	X	Input	Output	Real-time $\overline{A}$ data to B bus
H	H	H to L	X	H	X	Input	Output	Stored $\overline{A}$ data to B bus
H	L	H to L	H to L	H	H	Output	Output	Stored $\overline{A}$ data to B bus and stored $\overline{B}$ data to A bus

: OBSOLETED or NOT RECOMMENDED NEW DESIGNS

RECOMMENDED OPERATING CONDITIONS

PARAMETER	MAX or MIN	LS	ALS	AS	SN74 HC	CD74 HC	SN74 HCT	CD74 HCT	SN74 BCT	ABT	ABT Ver.A	UNIT
I_{CC}	MAX	180	88	211	0.08	0.16	0.08	0.16	69	30	30	mA
I_{OH}	MAX	-15	-15	-15	-6	-6	-6	-6	-15	-32	-32	mA
I_{OL}	MAX	24	24	48	6	6	6	6	64	64	64	mA

PARAMETER	MAX or MIN	LVTH 3V	AC 11	CD74 AC	ACT 11	CD74 ACT	LVC 3V	UNIT
I_{CC}	MAX	5	0.08	0.16	0.08	0.16	0.01	mA
I_{OH}	MAX	-32	-24	-24	-24	-24	-24	mA
I_{OL}	MAX	64	24	24	24	24	24	mA

SWITCHING CHARACTERISTICS

PARAMETER	INPUT	OUTPUT	MAX or MIN	LS	ALS	AS	SN74 HC	CD74 HC	SN74 HCT	CD74 HCT	SN74 BCT
f_{max}			MIN	-	40	90	27	20	20	17	77
t_w	CLKBA, CLKAB "H"		MIN	15	12.5	5	19	24	25	38	6.5
	CLKBA, CLKAB "L"		MIN	15	12.5	6	19	24	25	38	6.5
	DATA		MIN	15	-	-	-	-	-	-	-
t_{su}	A,B High		MIN	15	10	6	25	18	19	18	5
t_{su}	A,B Low		MIN	15	10	6	25	18	19	18	5
t_h	A,B		MIN	0	0	0	5	11	5	5	1
t_{PLH}	CLOCK	A,B	MAX	25	30	8.5	45	66	45	66	10.5
t_{PHL}				36	17	9	45	66	45	66	9.9
t_{PLH}	A,B	B,A	MAX	18	18	9	34	41	34	56	8.9
t_{PHL}				20	12	7	34	41	34	56	9.8
t_{PLH}	SAB,SBA (With Bus Input High)	A,B	MAX	35	35	11	48	51	48	69	13.1
t_{PHL}				32	20	9	48	51	48	69	8.5
t_{PLH}	SAB,SBA (With Bus Input Low)	A,B	MAX	50	25	11	48	51	48	69	11.3
t_{PHL}				23	20	9	48	51	48	69	12.5
t_{PZH}	$\overline{OEBA}$	A	MAX	45	17	10	61	53	61	68	10.6
t_{PZL}				54	18	16	61	53	61	68	12
t_{PHZ}	$\overline{OEBA}$	A	MAX	38	10	9	61	53	61	53	10
t_{PLZ}				30	16	9	61	53	61	53	9.5
t_{PZH}	OEAB	B	MAX	30	22	11	61	53	61	68	8.1
t_{PZL}				38	18	16	61	53	61	68	9.3
t_{PHZ}	OEAB	B	MAX	38	10	10	61	53	61	53	11.6
t_{PLZ}				30	16	11	61	53	61	53	11.3

PARAMETER	INPUT	OUTPUT	MAX or MIN	ABT	ABT Ver.A	LVTH 3V	AC 11	CD74 AC	ACT 11	CD74 ACT	LVC 3V
f_{max}			MIN	125	125	150	105	125	105	110	100
t_w	CLKBA, CLKAB "H"		MIN	4	4	3.3	4.8	4	4.8	4.5	3.3
	CLKBA, CLKAB "L"		MIN	4	4	3.3	4.8	4	4.8	4.5	3.3
	DATA		MIN	-	-	-	-	-	-	-	-
t_{su}	A,B High		MIN	3.5	3	1.2	4.5	2.5	4	2.5	1.9
t_{su}	A,B Low		MIN	3.5	3	1.6	4.5	2.5	4	2.5	1.9
t_h	A,B		MIN	0	0	0.8	1	2	2.5	2	1.7
t_{PLH}	CLOCK	A,B	MAX	7.8	5.6	4.7	10.7	13.5	13.1	15.5	8
t_{PHL}				8.4	5.6	4.7	12	13.5	14.4	15.5	8
t_{PLH}	A,B	B,A	MAX	6.7	4.8	3.5	8.6	11	11.1	12.5	7.4
t_{PHL}				6.7	5.4	3.5	9.6	11	11.6	12.5	7.4
t_{PLH}	SAB,SBA (With Bus Input High)	A,B	MAX	6.9	6.5	4.9	9.1	12	11	14.5	8.7
t_{PHL}				7.7	5.9	4.9	10.7	12	13.3	14.5	8.7
t_{PLH}	SAB,SBA (With Bus Input Low)	A,B	MAX	6.9	6.5	4.9	9.9	12	12.2	14.5	8.7
t_{PHL}				7.7	5.9	4.9	10.9	12	12.6	14.5	8.7
t_{PZH}	$\overline{OEBA}$	A	MAX	5.8	5.8	5.2	10.9	13.5	12.6	15.5	7.4
t_{PZL}				8.5	8.5	5.2	12.2	13.5	13.8	15.5	7.4
t_{PHZ}	$\overline{OEBA}$	A	MAX	8.2	5	5.5	7.6	13.5	9.9	15.5	7.5
t_{PLZ}				6.8	4.1	5.5	7.1	13.5	9.3	15.5	7.5
t_{PZH}	OEAB	B	MAX	6.5	6.5	4.7	11.3	13.5	15.2	15.5	7.1
t_{PZL}				7.4	7.4	4.7	12.3	13.5	16.1	15.5	7.1
t_{PHZ}	OEAB	B	MAX	6.9	5.5	5.6	7.6	13.5	10.3	15.5	7.4
t_{PLZ}				6.2	5.1	5.6	7.2	13.5	9.3	15.5	7.4

UNIT fmax : MHz other : ns

PRODUCTION DATA information is current as of publication date. Products conform to specifications per the terms of Texas Instruments standard warranty. Production processing does not necessarily include testing of all parameters. See www.ti.com/sc/logic for the most current data sheets.

653

OCTAL BUS TRANSCEIVERS AND REGISTERS

- Bus Tranceivers / Registers
- Independent Registers and Enables for A and B Buses
- Multiplexed Real-Time and Stored Data
- Inverting Data Paths
- Outputs
  - A Bus: Open-Collector
  - B Bus: 3-State

Logic Diagram

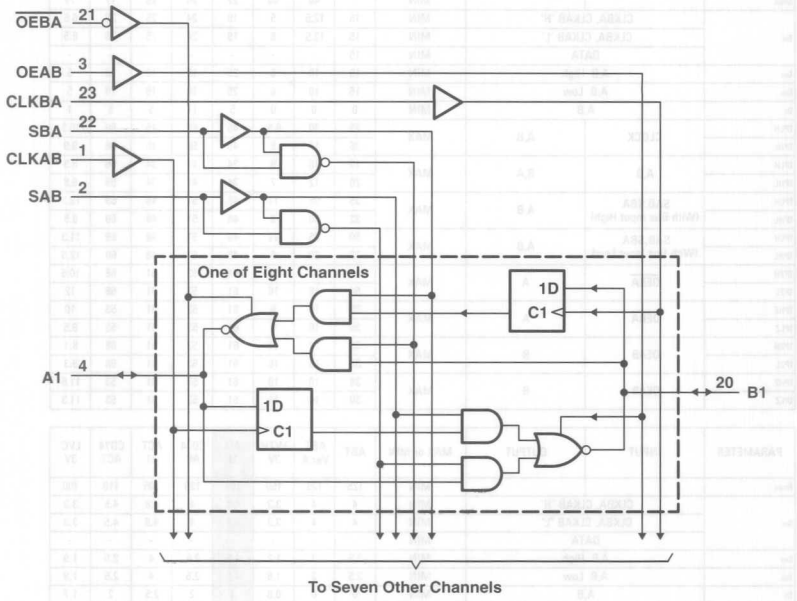

: OBSOLETED or NOT RECOMMENDED NEW DESIGNS

FUNCTION TABLE

L	L	X	X	X	L	Output	Input	Real-time $\overline{B}$ data to A bus Stored $\overline{B}$ data to A bus
L	L	X	H or L	X	H			
H	H	X	X	L	X	Input	Output	Real-time $\overline{A}$ data to B bus Stored $\overline{A}$ data to B bus
H	H	H or L	X	H	X			
H	L	H or L	H or L	H	H	Output	Output	Stored $\overline{A}$ data to B bus and stored $\overline{B}$ data to A bus

NOTES:
† The data output functions can be enabled or dissabled by a variety of level combinations at GAB or $\overline{GBA}$. Data input functions always are enabled; i.e., data at the bus teminals is storedd on evry low-to-high transition on the clock inputs.
‡ Select control = L: clocks can occur simultaneously.
Select control = H: clock must be staggered to load both registers.

RECOMMENDED OPERATING CONDITIONS

PARAMETER	MAX or MIN	LS	ALS	UNIT
I_{CC}	MAX	165	88	mA
I_{OH}	MAX	-15	-15	mA
I_{OL}	MAX	24	24	mA

SWITCHING CHARACTERISTICS

PARAMETER	INPUT	OUTPUT	MAX or MIN	LS	ALS
t_w	CLK "H"		MIN	15	14.5
	CLK "L"		MIN	30	14.5
	DATA		MIN	30	-
t_{su}	A, B		MIN	15	10
t_h	A, B		MIN	0	0
t_{PLH}	CLKBA	A	MAX	38	64
t_{PHL}				39	22
t_{PLH}	CLKAB	B	MAX	23	30
t_{PHL}				36	17
t_{PLH}	A	B	MAX	18	18
t_{PHL}				30	15
t_{PLH}	B	A	MAX	32	56
t_{PHL}				24	15
t_{PLH}	SBA (B "H")	A	MAX	57	62
t_{PHL}				39	25
t_{PLH}	SBA (B "L")	A	MAX	51	62
t_{PHL}				35	25
t_{PLH}	SAB (A "H")	B	MAX	48	35
t_{PHL}				33	22
t_{PLH}	SAB (A "L")	B	MAX	36	25
t_{PHL}				30	22
t_{PLH}	$\overline{OEBA}$	A	MAX	35	30
t_{PHL}				55	24
t_{PZH}	OEAB	B	MAX	29	22
t_{PZL}				38	22
t_{PHZ}	OEAB	B	MAX	39	14
t_{PLZ}				29	16

UNIT:ns

654

OCTAL BUS TRANSCEIVERS AND REGISTERS

- Bus Tranceivers / Registers
- Independent Registers and Enables for A and B Buses
- Multiplexed Real-Time and Stored Data
- True Data Paths
- Outputs
  - A Bus: Open-Collector
  - B Bus: 3-State

Logic Diagram

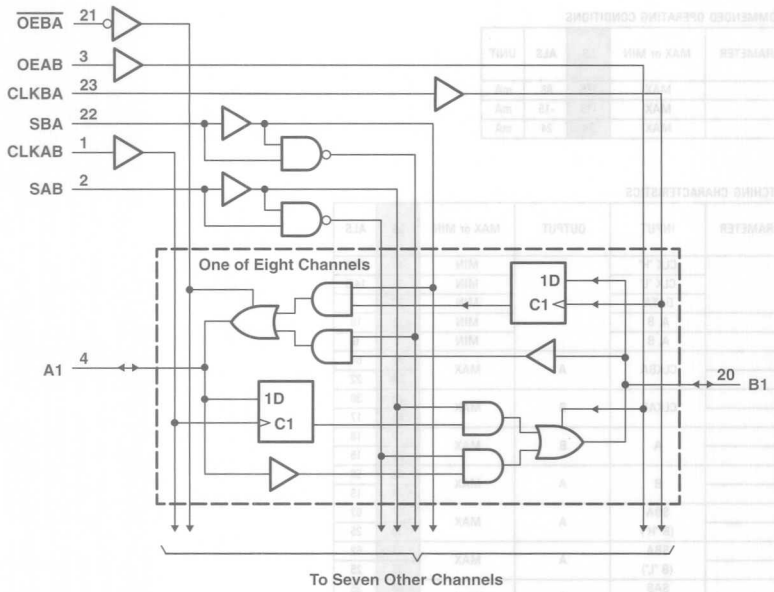

: OBSOLETED or NOT RECOMMENDED NEW DESIGNS

FUNCTION TABLE

INPUTS						DATA I/O		OPERATION OR FUNCTION
OEAB	$\overline{OEBA}$	CLKAB	CLKBA	SAB	SBA	A1–A8	B1–B8	
L	H	H to L	H to L	X	X	Input	Input	Isolation
L	H	↑	↑	X	X	Input	Input	Store A and B data
X	H	↑	H to L	X	X	Input	Unspecified	Store A, hold B
H	H	↑	↑	X	X	Input	Output	Store A in both registers
L	X	H to L	↑	X	X	Unspecified	Input	Hold A, store B
L	L	↑	↑	X	X	Output	Input	Store B in both registers
L	L	X	X	X	L	Output	Input	Real-time $\overline{B}$ data to A bus
L	L	X	H to L	X	H	Output	Input	Stored $\overline{B}$ data to A bus
H	H	X	X	L	X	Input	Output	Real-time $\overline{A}$ data to B bus
H	H	H to L	X	H	X	Input	Output	Stored $\overline{A}$ data to B bus
H	L	H to L	H to L	H	H	Output	Output	Stored $\overline{A}$ data to B bus and stored $\overline{B}$ data to A bus

RECOMMENDED OPERATING CONDITIONS

PARAMETER	MAX or MIN	LS	ALS	UNIT
I_{CC}	MAX	180	88	mA
I_{OH}	MAX	-15	-15	mA
I_{OL}	MAX	24	24	mA

SWITCHING CHARACTERISTICS

PARAMETER	INPUT	OUTPUT	MAX or MIN	LS	ALS
t_w	CLKBA, CLKAB "H"		MIN	15	14.5
	CLKBA, CLKAB "L"		MIN	30	14.5
	DATA		MIN	30	-
t_{su}	A,B		MIN	15	10
t_h	A,B		MIN	0	0
t_{PLH}	CLKBA	A	MAX	33	64
t_{PHL}				36	22
t_{PLH}	CLKAB	B	MAX	21	30
t_{PHL}				33	17
t_{PLH}	A	B	MAX	18	18
t_{PHL}				30	15
t_{PLH}	B	A	MAX	27	56
t_{PHL}				21	21
t_{PLH}	SBA (B "H")	A	MAX	48	62
t_{PHL}				32	25
t_{PLH}	SBA (B "L")	A	MAX	54	62
t_{PHL}				29	25
t_{PLH}	SAB (A "H")	B	MAX	35	25
t_{PHL}				27	22
t_{PLH}	SAB (A "L")	B	MAX	45	35
t_{PHL}				21	22
t_{PLH}	$\overline{OEBA}$	A	MAX	35	30
t_{PHL}				53	24
t_{PZH}	OEAB	B	MAX	29	22
t_{PZL}				33	22
t_{PHZ}	OEAB	B	MAX	39	14
t_{PLZ}				29	16

UNIT: ns

● 74ACT11xxx: Product Available in Reduced-Noise Advanced CMOS (11000 Series)

Logic Diagram

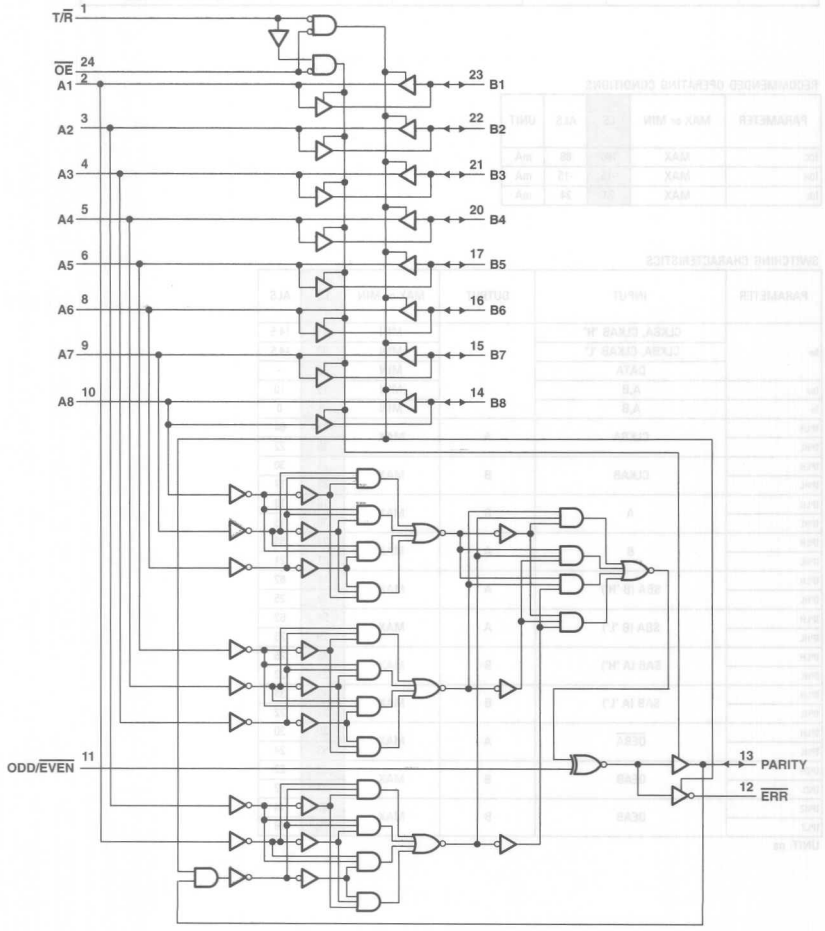

: OBSOLETED or NOT RECOMMENDED NEW DESIGNS

RECOMMENDED OPERATING CONDITIONS

PARAMETER	MAX or MIN	F	SN74 BCT	ABT	ACT 11	UNIT
I_{CCH}	MAX	125	2	0.25	0.08	mA
I_{CCL}	MAX	150	90	40	0.08	mA
I_{CCZ}	MAX	145	1	0.25	0.08	mA
I_{OH} A1-A9	MAX	-3	-3	-32	-24	mA
I_{OH} B1-B9, PARITY, $\overline{ERR}$	MAX	-12	-15	-32	-24	mA
I_{OL} A1-A8	MAX	24	24	64	24	mA
I_{OL} B1-B8, PARITY, $\overline{ERR}$	MAX	64	64	64	24	mA

SWITCHING CHARACTERISTICS

PARAMETER	INPUT	OUTPUT	MAX or MIN	F	SN74 BCT	ABT	ACT 11
t_{PLH}	A,B	B,A	MAX	8	6.6	4.6	9.4
t_{PHL}			MAX	8	9	4.3	9.4
t_{PLH}	A	PARITY	MAX	16	15.4	8.1	14.4
t_{PHL}			MAX	16	15.9	7.7	15
t_{PLH}	ODD/$\overline{EVEN}$	PARITY, $\overline{ERR}$	MAX	12	7.1	4.9	10.7
t_{PHL}			MAX	12.5	9	4.9	11.3
t_{PLH}	B	$\overline{ERR}$	MAX	22.5	15.3	7.9	23.6
t_{PHL}			MAX	22.5	15.5	7.8	24.6
t_{PLH}	PARITY	$\overline{ERR}$	MAX	16.5	13.2	7.7	14.6
t_{PHL}			MAX	17	13.9	7.5	14.7
t_{PZH}	$\overline{OE}$	A, B, PARITY	MAX	9	9.1	6.5	12.1
t_{PZL}			MAX	11	16.3	6.5	13.8
t_{PZH}	$\overline{OE}$	$\overline{ERR}$	MAX	9	9.1	6.6	12.1
t_{PZL}			MAX	11	16.3	9.2	13.8
t_{PHZ}	$\overline{OE}$	A, B, PARITY, ERR	MAX	8	9.1	6.2	12.1
t_{PLZ}			MAX	6.5	8	7.8	11.6

UNIT: ns

666

8-BIT D-TYPE TRANSPARENT READ-BACK LATCHES

- 3-State I/O-Type Read-Back Inputs
- True Outputs
- Bus-Structured Pinout

Logic Diagram

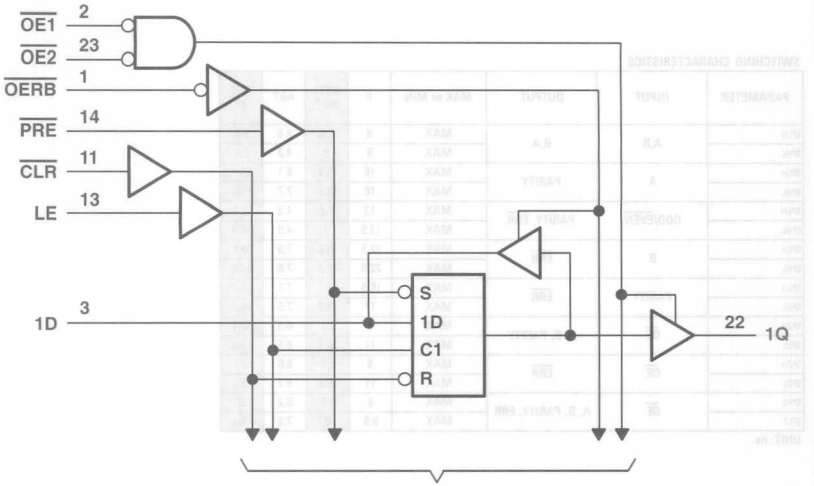

: OBSOLETED or NOT RECOMMENDED NEW DESIGNS

RECOMMENDED OPERATING CONDITIONS

PARAMETER		MAX or MIN	ALS	UNIT
I_{CC}		MAX	73	mA
I_{OH}	Q	MAX	-2.6	mA
	D	MAX	-0.4	mA
I_{OL}	Q	MAX	24	mA
	D	MAX	8	mA

SWITCHING CHARACTERISTICS

PARAMETER		INPUT	OUTPUT	MAX or MIN	ALS
t_w	LE "H"			MIN	10
	$\overline{CLR}$ "L"			MIN	10
	$\overline{PRE}$ "L"			MIN	10
t_{su}	DATA (LE)			MIN	10
	DATA ($\overline{OERB}$)			MIN	10
t_h	DATA (LE)			MIN	5
t_{PLH}		D	Q	MAX	14
t_{PHL}					18
t_{PLH}		LE	Q	MAX	21
t_{PHL}					27
t_{PHL}		$\overline{CLR}$	Q	MAX	29
			D		32
t_{PLH}		$\overline{PRE}$	Q	MAX	22
t_{PHL}			D		28
t_{en}		$\overline{OERB}$	D	MAX	21
t_{dis}					14
t_{en}		$\overline{OE1}$, $\overline{OE2}$	Q	MAX	21
t_{dis}					14

UNIT: ns

Logic Diagram

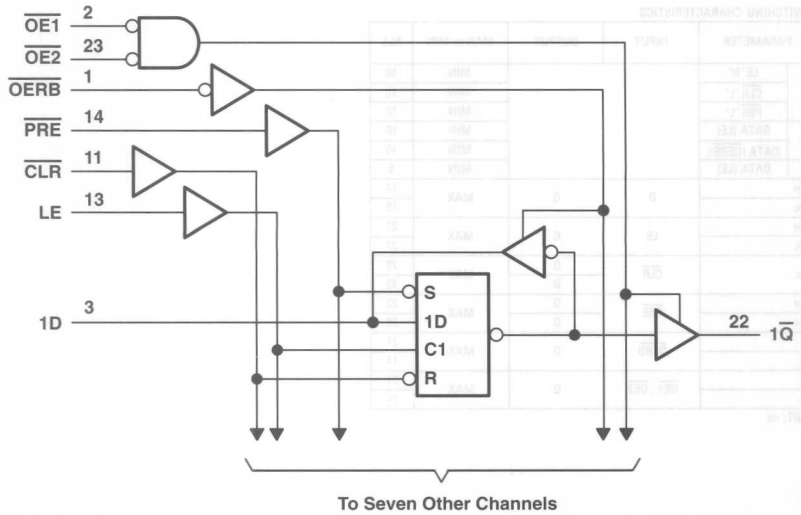

: OBSOLETED or NOT RECOMMENDED NEW DESIGNS

RECOMMENDED OPERATING CONDITIONS

PARAMETER		MAX or MIN	ALS	UNIT
I_{CC}		MAX	79	mA
I_{OH}	Q	MAX	-2.6	mA
	D	MAX	-0.4	mA
I_{OL}	Q	MAX	24	mA
	D	MAX	8	mA

SWITCHING CHARACTERISTICS

PARAMETER		INPUT	OUTPUT	MAX or MIN	ALS
t_w	LE "H"			MIN	10
	$\overline{CLR}$ "L"			MIN	10
	$\overline{PRE}$ "L"			MIN	10
t_{su}	DATA (LE)			MIN	10
	DATA ($\overline{OERB}$)			MIN	10
t_h	DATA (LE)			MIN	5
t_{PLH}		D	$\overline{Q}$	MAX	20
t_{PHL}					15
t_{PLH}		LE	$\overline{Q}$	MAX	28
t_{PHL}					22
t_{PHL}		$\overline{CLR}$	$\overline{Q}$	MAX	24
			D		26
t_{PLH}		$\overline{PRE}$	$\overline{Q}$	MAX	25
t_{PHL}			D		28
t_{en}		$\overline{OERB}$	D	MAX	21
t_{dis}					14
t_{en}		$\overline{OE1}$, $\overline{OE2}$	$\overline{Q}$	MAX	21
t_{dis}					14

UNIT: ns

669

SYNCHRONOUS 4-BIT UP/DOWN BINARY COUNTER

- Fully Synchronous Operation for Counting and Programming
- Internal Look-Ahead for Fast Counting
- Carry Output for n-Bit Cascading

Logic Diagram

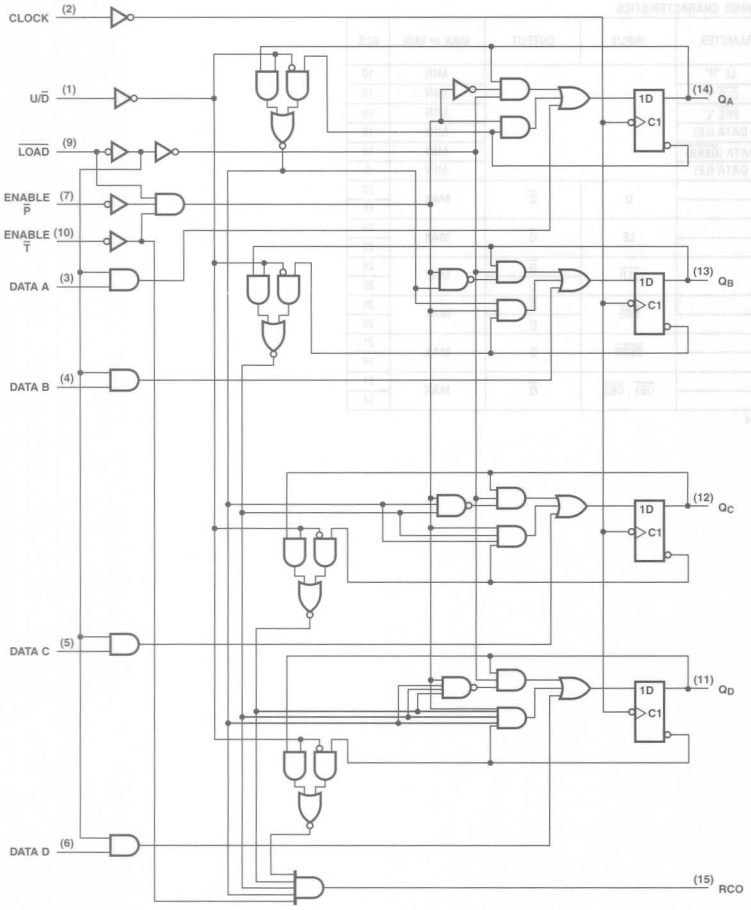

: OBSOLETED or NOT RECOMMENDED NEW DESIGNS

RECOMMENDED OPERATING CONDITIONS

PARAMETER	MAX or MIN	LS	UNIT
I_{CC}	MAX	34	mA
I_{OH}	MAX	-0.4	mA
I_{OL}	MAX	8	mA

SWITCHING CHARACTERISTICS

PARAMETER		INPUT	OUTPUT	MAX or MIN	LS
f_{max}				MIN	25
t_w				MIN	20
t_{su}	A,B,C,D			MIN	25
	$\overline{ENP}$,$\overline{ENT}$			MIN	40
	$\overline{LOAD}$			MIN	30
	U/$\overline{D}$			MIN	45
t_h				MIN	0
t_{PLH}		CLOCK	$\overline{RCO}$	MAX	40
t_{PHL}					60
t_{PLH}		CLOCK	Q	MAX	27
t_{PHL}					27
t_{PLH}		$\overline{ENT}$	$\overline{RCO}$	MAX	17
t_{PHL}					45
t_{PLH}		U/$\overline{D}$	$\overline{RCO}$	MAX	35
t_{PHL}					40

UNIT fmax : MHz other : ns

670

4-BY-4 REGISTER FILE

- Separate Read / Write Addressing Permits Simultaneous Reading and Writing
- Organized as 4 Words of 4 Bits
- Expandable to 512 Words of n-Bits
- 3-State Outputs

Logic Diagram

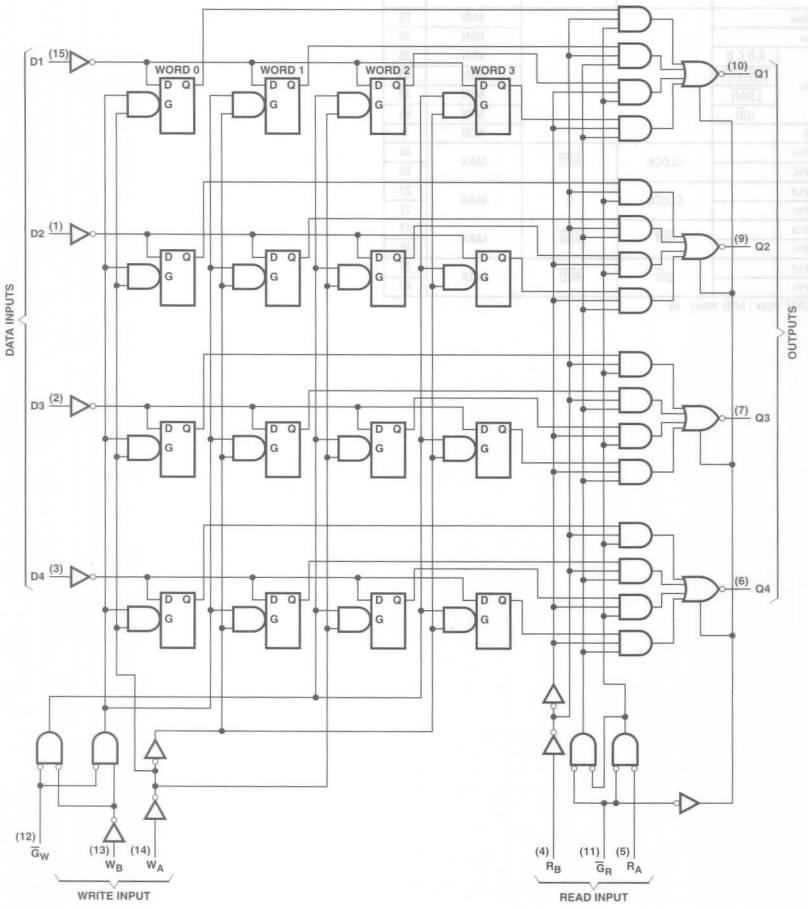

: OBSOLETED or NOT RECOMMENDED NEW DESIGNS

FUNCTION TABLE

WRITE INPUTS			WORD			
W_B	W_A	$\overline{G}_W$	0	1	2	3
L	L	L	Q = D	Q_0	Q_0	Q_0
L	H	L	Q_0	Q = D	Q_0	Q_0
H	L	L	Q_0	Q_0	Q = D	Q_0
H	H	L	Q_0	Q_0	Q_0	Q = D
X	X	H	Q_0	Q_0	Q_0	Q_0

READ INPUTS			OUTPUTS			
R_B	R_A	$\overline{G}_R$	Q1	Q2	Q3	Q4
L	L	L	W0B1	W0B2	W0B3	W0B4
L	H	L	W1B1	W1B2	W1B3	W1B4
H	L	L	W2B1	W2B2	W2B3	W2B4
H	H	L	W3B1	W3B2	W3B3	W3B4
X	X	H	Z	Z	Z	Z

RECOMMENDED OPERATING CONDITIONS

PARAMETER	MAX or MIN	LS	CD74 HC	CD74 HCT	UNIT
I_{CC}	MAX	50	0.16	0.16	mA
I_{OH}	MAX	-2.6	-6	-6	mA
I_{OL}	MAX	8	6	6	mA

SWITCHING CHARACTERISTICS

PARAMETER	INPUT	OUTPUT	MAX or MIN	LS	CD74 HC	CD74 HCT
t_w			MIN	25	24	30
t_{su} (D)			MIN	10	18	18
t_{su} (W)			MIN	15	18	30
t_h (D)			MIN	15	5	5
t_h (W)			MIN	5	5	5
t_{latch}			MIN	25	30	38
t_{PLH}	Read Select	Q	MAX	40	59	53
t_{PHL}				45	59	53
t_{PLH}	Write Enable	Q	MAX	45	75	75
t_{PHL}				50	75	75
t_{PLH}	Data	Q	MAX	45	75	75
t_{PHL}				40	75	75
t_{PZH}	Read Enable	Q	MAX	35	45	57
t_{PZL}				40	45	57
t_{PHZ}	Read Disable	Q	MAX	50	45	53
t_{PLZ}				35	45	53

UNIT: ns

PRODUCTION DATA information is current as of publication date. Products conform to specifications per the terms of Texas Instruments standard warranty. Production processing does not necessarily include testing of all parameters. See www.ti.com/sc/logic for the most current data sheets.

673

16-BIT SHIFT REGISTER

- 16-Bit Serial-In, Serial-Out Shift Register with 16-Bit Parallel-Out Storage Register
- Performs Serial-to-Parallel Conversion

Logic Diagram

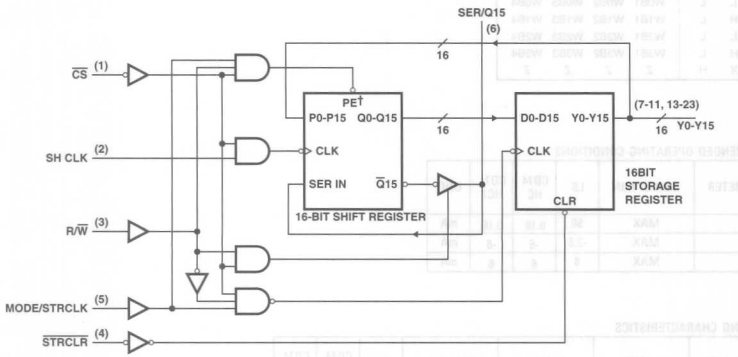

† When PE is active, data synchronously parallel loaded into the shift registers form the 16 P inputs and no shifting takes place.

: OBSOLETED or NOT RECOMMENDED NEW DESIGNS

FUNCTION TABLE

INPUTS					SER/ Q15	SHIFT REGISTER FUNCTIONS				STORAGE REGISTER FUNCTIONS	
$\overline{CS}$	R/W	SH CLK	$\overline{STRCLR}$	MODE/ STRCLK		SHIFT	READ FROM SERIAL INPUT	WRITE INTO SERIAL INPUT	PARALLEL LOAD	CLEAR	LOAD
H	X	X	X	X	Z	NO	NO	NO	NO		NO
X	X	X	L	X						YES	
L	L	↓	X	X	Z	YES	NO	YES	NO		
L	H	X	X	X	Q15		YES	NO			NO
L	H	↓	X	L	Q14n	YES	YES	NO	NO		NO
L	H	↓	L	X	L	NO	YES		YES	YES;	NO
L	H	↓	H	X	Y15n	NO	YES		YES	NO	NO
L	L	X	H	↑	Z		NO			NO	YES

RECOMMENDED OPERATING CONDITIONS

PARAMETER		MAX or MIN	LS	UNIT
I_{CC}		MAX	80	mA
I_{OH}	SER/Q15	MAX	-2.6	mA
	Y0-Y15	MAX	-0.4	mA
I_{OL}	SER/Q15	MAX	24	mA
	Y0-Y15	MAX	8	mA

SWITCHING CHARACTERISTICS

PARAMETER		INPUT	OUTPUT	MAX or MIN	LS
f_{max}				MIN	20
t_w	CLK			MIN	20
	CLR			MIN	20
t_{su}	SER/Q15			MIN	20
	Y0-Y15			MIN	20
	Mode			MIN	35
	$\overline{R/W}$,$\overline{CS}$			MIN	35
t_h	SER/Q15			MIN	0
	Y0-Y15			MIN	0
	Mode			MIN	0
t_{PLH}		$\overline{STRCLR}$	Y0-Y15	MAX	40
t_{PLH}		MODE/ STRCLK	Y0-Y15	MAX	45
t_{PHL}					45
t_{PLH}		SH CLK	SER/Q15	MAX	33
t_{PHL}					40

UNIT fmax : MHz other : ns

674

16-BIT SHIFT REGISTER

- 16-Bit Parallel-In, Serial-Out Shift Register
- Performs Parallel-to-Serial Conversion

Logic Diagram

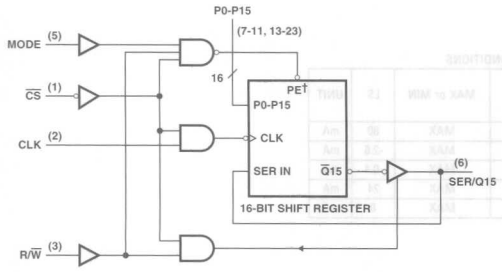

† When PE is active, data synchronously parallel loaded into the shift registers form the 16 P inputs and no shifting takes place.

: OBSOLETED or NOT RECOMMENDED NEW DESIGNS

FUNCTION TABLE

INPUTS				SER/ Q15	OPERATION
$\overline{CS}$	R/$\overline{W}$	MODE	CLK		
H	X	X	X	Z	Do nothing
L	L	X	↓	Z	Shift and write (serial load)
L	H	L	↓	Q14n	Shift and read
L	H	H	↓	P15	parallel load

RECOMMENDED OPERATING CONDITIONS

PARAMETER		MAX or MIN	LS	UNIT
I_{CC}		MAX	40	mA
I_{OH}	SER/Q15	MAX	-2.6	mA
	P0-P15	MAX	-0.4	mA
I_{OL}	SER/Q15	MAX	24	mA
	P0-P15	MAX	8	mA

SWITCHING CHARACTERISTICS

PARAMETER		INPUT	OUTPUT	MAX or MIN	LS
f_{max}				MIN	20
t_w	CLK			MIN	20
	CLR				20
t_{su}	SER/Q15			MIN	20
	P0-P15				20
	Mode				35
	R/$\overline{W}$,$\overline{CS}$				35
t_h	SER/Q15			MIN	0
	P0-P15				0
	Mode				0
t_{PLH}		CLK	SER/Q15	MAX	33
t_{PHL}					40
t_{PZH}		$\overline{CS}$, R/$\overline{W}$	SER/Q15	MAX	45
t_{PZL}					45
t_{PHZ}		$\overline{CS}$, R/$\overline{W}$	SER/Q15	MAX	40
t_{PLZ}					40

UNIT fmax : MHz other : ns

679

ADDRESS COMPARATOR

- 12-Bit Address Comparator with Enable

Logic Diagram

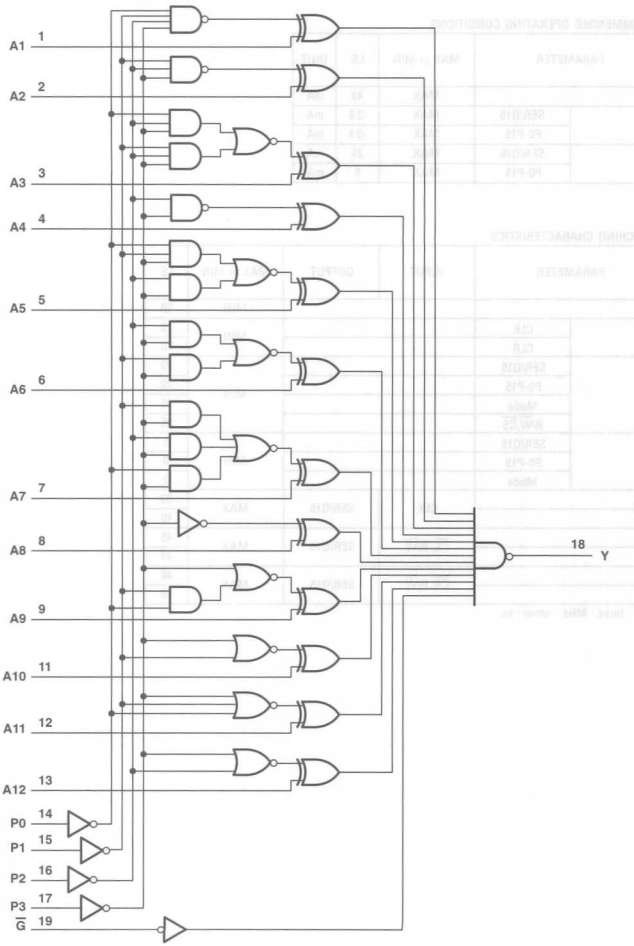

: OBSOLETED or NOT RECOMMENDED NEW DESIGNS

FUNCTION TABLE

	INPUTS																OUTPUT
$\overline{G}$	P3	P2	P1	P0	A1	A2	A3	A4	A5	A6	A7	A8	A9	A10	A11	A12	Y
L	L	L	L	L	H	H	H	H	H	H	H	H	H	H	H	H	L
L	L	L	L	H	L	H	H	H	H	H	H	H	H	H	H	H	L
L	L	L	H	L	L	L	H	H	H	H	H	H	H	H	H	H	L
L	L	L	H	H	L	L	L	H	H	H	H	H	H	H	H	H	L
L	L	H	L	L	L	L	L	L	H	H	H	H	H	H	H	H	L
L	L	H	L	H	L	L	L	L	L	H	H	H	H	H	H	H	L
L	L	H	H	L	L	L	L	L	L	L	H	H	H	H	H	H	L
L	L	H	H	H	L	L	L	L	L	L	L	H	H	H	H	H	L
L	H	L	L	L	L	L	L	L	L	L	L	L	H	H	H	H	L
L	H	L	L	H	L	L	L	L	L	L	L	L	L	H	H	H	L
L	H	L	H	L	L	L	L	L	L	L	L	L	L	L	H	H	L
L	H	L	H	H	L	L	L	L	L	L	L	L	L	L	L	H	L
L	H	H	L	L	L	L	L	L	L	L	L	L	H	H	H	L	L
L	H	H	L	H	L	L	L	L	L	L	L	L	L	H	H	L	L
L	H	H	H	L	L	L	L	L	L	L	L	L	L	L	H	L	L
L	H	H	H	H	L	L	L	L	L	L	L	L	L	L	L	L	L
L	All other combinations																H
H	Any combination																H

RECOMMENDED OPERATING CONDITIONS

PARAMETER	MAX or MIN	ALS	SN74 HC	UNIT
I_{CC}	MAX	28	0.08	mA
I_{OH}	MAX	-2.6	-4	mA
I_{OL}	MAX	24	4	mA

SWITCHING CHARACTERISTICS

PARAMETER	INPUT	OUTPUT	MAX or MIN	ALS	SN74 HC
t_{PLH}	Any P	Y	MAX	25	375
t_{PHL}				35	375
t_{PLH}	Any A	Y	MAX	22	78
t_{PHL}				30	78
t_{PLH}	$\overline{G}$	Y	MAX	13	31
t_{PHL}				25	31

UNIT: ns

682

8-BIT IDENTITY COMPARATOR

- Totem-Pole Outputs
- Hysteresis at P and Q Inputs
- 20kΩ Pullup Resistors on the Q Inputs

Logic Diagram

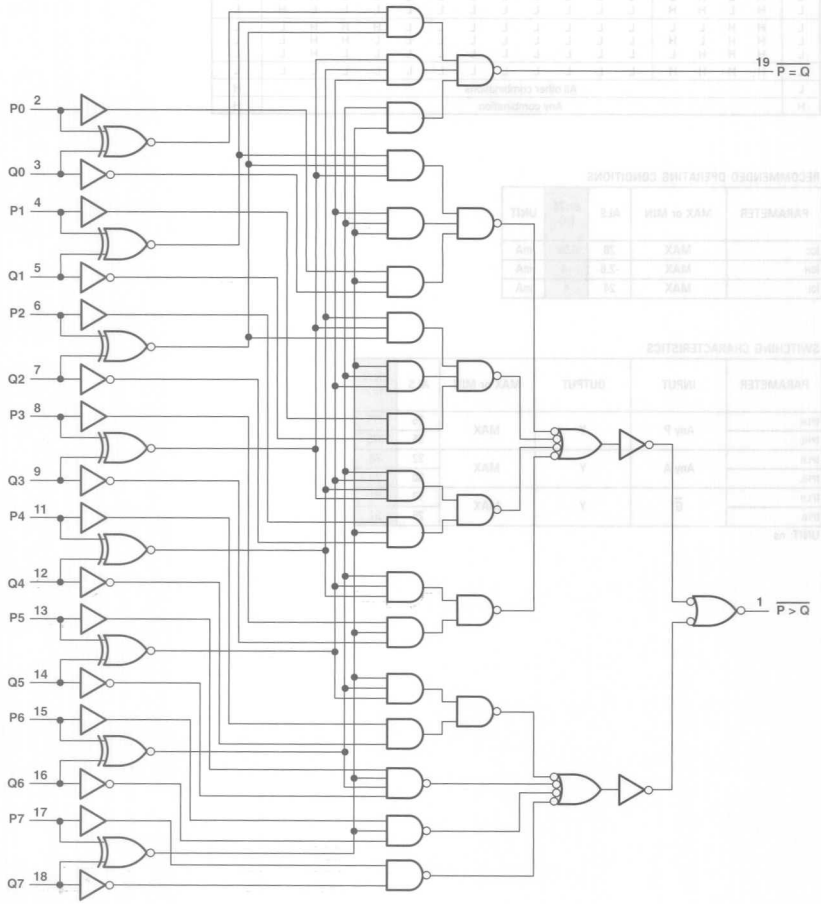

: OBSOLETED or NOT RECOMMENDED NEW DESIGNS

FUNCTION TABLE

DATA INPUT P, Q	OUTPUTS	
	$\overline{P=Q}$	$\overline{P>Q}$
P=Q	L	H
P>Q	H	L
P<Q	H	H

RECOMMENDED OPERATING CONDITIONS

PARAMETER	MAX or MIN	LS	SN74 HC	UNIT
I_{CC}	MAX	70	0.11	mA
I_{OH}	MAX	-0.4	-4	mA
I_{OL}	MAX	24	4	mA

SWITCHING CHARACTERISTICS

PARAMETER	INPUT	OUTPUT	MAX or MIN	LS	SN74 HC
t_{PLH}	P	$\overline{P = Q}$	MAX	25	69
t_{PHL}				25	69
t_{PLH}	Q	$\overline{P = Q}$	MAX	25	69
t_{PHL}				25	69
t_{PLH}	P	$\overline{P > Q}$	MAX	30	69
t_{PHL}				30	69
t_{PLH}	Q	$\overline{P > Q}$	MAX	30	69
t_{PHL}				30	69

UNIT: ns

PRODUCTION DATA information is current as of publication date. Products conform to specifications per the terms of Texas Instruments standard warranty. Production processing does not necessarily include testing of all parameters. See www.ti.com/sc/logic for the most current data sheets.

684

8-BIT IDENTITY COMPARATOR

- Totem-Pole Outputs
- Hysteresis at P and Q Inputs

Logic Diagram

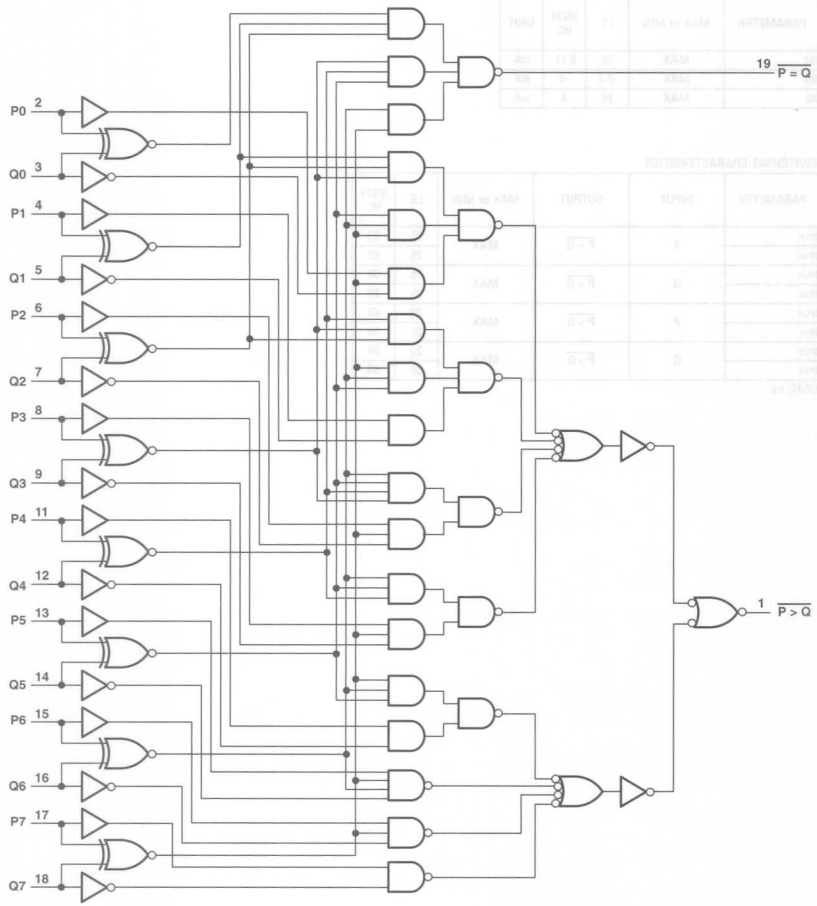

: OBSOLETED or NOT RECOMMENDED NEW DESIGNS

FUNCTION TABLE

DATA INPUT P, Q	OUTPUTS $\overline{P=Q}$	OUTPUTS $\overline{P>Q}$
$\overline{P=Q}$	L	H
$\overline{P>Q}$	H	L
$\overline{P<Q}$	H	H

RECOMMENDED OPERATING CONDITIONS

PARAMETER	MAX or MIN	LS	SN74 HC	UNIT
I_{CC}	MAX	65	0.08	mA
I_{OH}	MAX	-0.4	-4	mA
I_{OL}	MAX	24	4	mA

SWITCHING CHARACTERISTICS

PARAMETER	INPUT	OUTPUT	MAX or MIN	LS	SN74 HC
t_{PLH}	P	$\overline{P = Q}$	MAX	25	69
t_{PHL}				25	69
t_{PLH}	Q	$\overline{P = Q}$	MAX	25	69
t_{PHL}				25	69
t_{PLH}	P	$\overline{P > Q}$	MAX	30	69
t_{PHL}				30	69
t_{PLH}	Q	$\overline{P > Q}$	MAX	30	69
t_{PHL}				30	69

UNIT: ns

686

8-BIT IDENTITY COMPARATOR

- Totem-Pole Outputs
- Hysteresis at P and Q Inputs

Logic Diagram

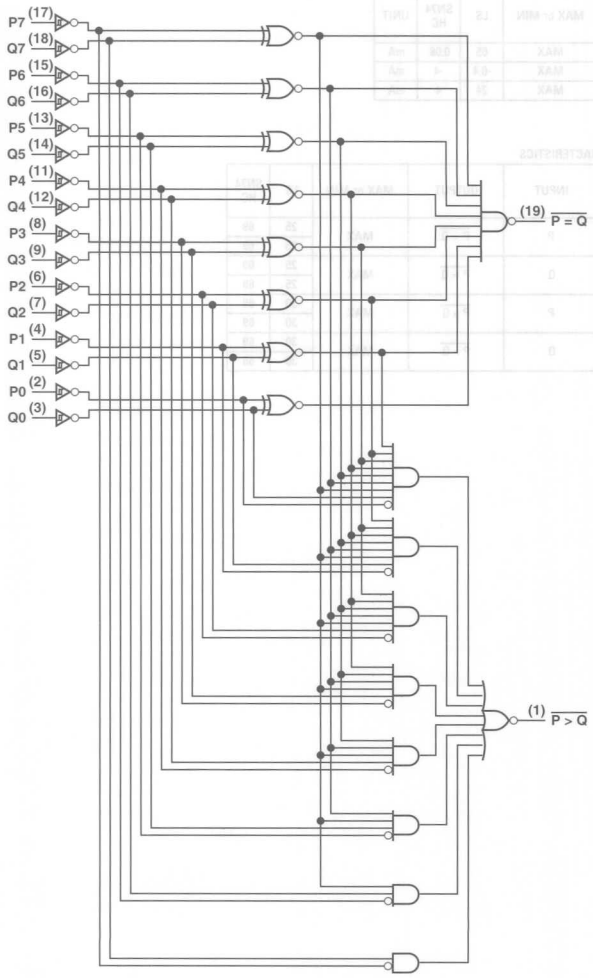

: OBSOLETED or NOT RECOMMENDED NEW DESIGNS

FUNCTION TABLE

INPUTS			OUTPUTS	
DATA	ENABLE		$\overline{P=Q}$	$\overline{P>Q}$
P, Q	$\overline{G1}$	$\overline{G2}$		
P=Q	L	L	L	H
P>Q	L	L	H	L
P<Q	L	L	H	H
X	H	H	H	H

RECOMMENDED OPERATING CONDITIONS

PARAMETER	MAX or MIN	LS	UNIT
I_{CC}	MAX	75	mA
I_{OH}	MAX	-0.4	mA
I_{OL}	MAX	24	mA

SWITCHING CHARACTERISTICS

PARAMETER	INPUT	OUTPUT	MAX or MIN	LS
t_{PLH}	P	$\overline{P=Q}$	MAX	25
t_{PHL}				30
t_{PLH}	Q	$\overline{P=Q}$	MAX	25
t_{PHL}				30
t_{PLH}	$\overline{G1}$	$\overline{P=Q}$	MAX	20
t_{PHL}				30
t_{PLH}	P	$\overline{P>Q}$	MAX	30
t_{PHL}				30
t_{PLH}	Q	$\overline{P>Q}$	MAX	30
t_{PHL}				30
t_{PLH}	$\overline{G2}$	$\overline{P>Q}$	MAX	30
t_{PHL}				25

UNIT: ns

688

8-BIT IDENTITY COMPARATOR

- Totem-Pole Outputs
- Hysteresis at P and Q Inputs

Logic Diagram

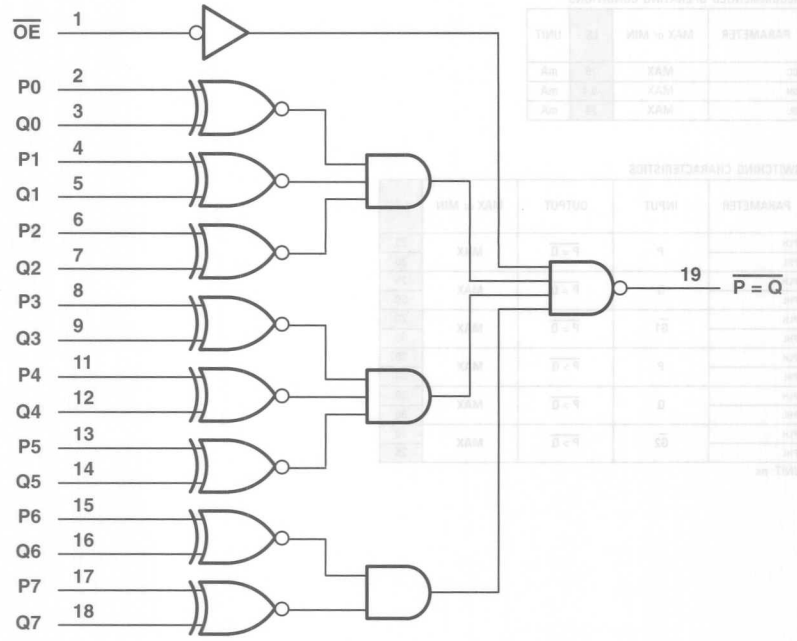

: OBSOLETED or NOT RECOMMENDED NEW DESIGNS

FUNCTION TABLE

INPUTS		OUTPUT
DATA	ENABLE	
P, Q	$\overline{G}$	$\overline{P=Q}$
P=Q	L	L
P>Q	L	H
P<Q	L	H
X	H	H

RECOMMENDED OPERATING CONDITIONS

PARAMETER	MAX or MIN	LS	ALS	SN74 HC	CD74 HC	CD74 HCT	UNIT
I_{CC}	MAX	65	19	0.08	0.16	0.16	mA
I_{OH}	MAX	-0.4	-2.6	-4	-4	-4	mA
I_{OL}	MAX	24	24	4	4	4	mA

SWITCHING CHARACTERISTICS

PARAMETER	INPUT	OUTPUT	MAX or MIN	LS	ALS	SN74 HC	CD74 HC	CD74 HCT
t_{PLH}	P	$\overline{P=Q}$	MAX	18	12	53	51	51
t_{PHL}				23	20	53	51	51
t_{PLH}	Q	$\overline{P=Q}$	MAX	18	12	53	51	51
t_{PHL}				23	20	53	51	51
t_{PLH}	$\overline{G}$	$\overline{P=Q}$	MAX	18	12	30	36	36
t_{PHL}				20	22	30	36	36

UNIT: ns

697

SYNCHRONOUS UP/DOWN COUNTER WITH OUTPUT REGISTER, MULTIPLEXED THREE-STATE OUTPUT

- Multiplexed Outputs for Counter or Latched Data
- 3-State Outputs Drive Bus Lines Directly
- Binary Counter, Direct Clear

Logic Diagram

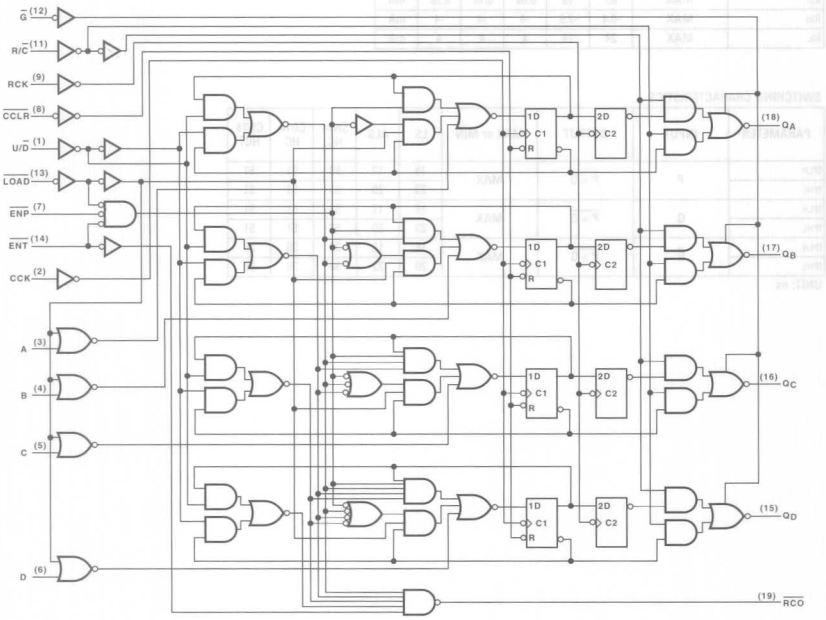

: OBSOLETED or NOT RECOMMENDED NEW DESIGNS

RECOMMENDED OPERATING CONDITIONS

PARAMETER		MAX or MIN	LS	UNIT
I_{CC}		MAX	70	mA
I_{OH}	Q	MAX	-2.6	mA
	$\overline{RCO}$		-0.4	mA
I_{OL}	Q	MAX	24	mA
	$\overline{RCO}$		8	mA

SWITCHING CHARACTERISTICS

PARAMETER		INPUT	OUTPUT	MAX or MIN	LS
t_w	CCK			MIN	25
	RCK				25
t_{su}	A thru D			MIN	30
	$\overline{ENT}$, ENP				30
	U/$\overline{D}$				35
t_h				MIN	0
t_{PLH}		CCK ↑	$\overline{RCO}$	MAX	40
t_{PHL}					40
t_{PLH}		$\overline{ENT}$	$\overline{RCO}$	MAX	20
t_{PHL}					20
t_{PLH}		CCK ↑	Q	MAX	20
t_{PHL}					25
t_{PLH}		RCK ↑	Q	MAX	20
t_{PHL}					25
t_{PHL}		$\overline{CCLR}$ ↓	Q	MAX	40
t_{PLH}		R / $\overline{C}$	Q	MAX	25
t_{PHL}					25

UNIT: ns

699

SYNCHRONOUS UP/DOWN COUNTER WITH OUTPUT REGISTER, MULTIPLEXED THREE-STATE OUTPUT

- Multiplexed Outputs for Counter or Latched Data
- 3-State Outputs Drive Bus Lines Directly
- Binary Counter, Synchronous Clear

Logic Diagram

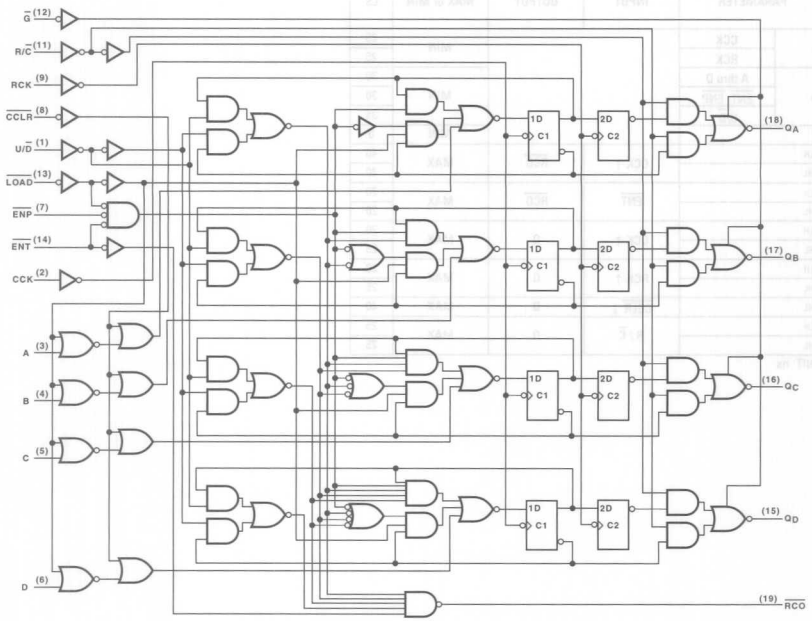

: OBSOLETED or NOT RECOMMENDED NEW DESIGNS

RECOMMENDED OPERATING CONDITIONS

PARAMETER		MAX or MIN	LS	UNIT
I_{CC}		MAX	70	mA
I_{OH}	Q	MAX	-2.6	mA
	$\overline{RCO}$	MAX	-0.4	mA
I_{OL}	Q	MAX	24	mA
	$\overline{RCO}$	MAX	8	mA

SWITCHING CHARACTERISTICS

PARAMETER		INPUT	OUTPUT	MAX or MIN	LS
t_w	CCK			MIN	25
	RCK				25
t_{su}	A thru D			MIN	30
	$\overline{ENT}$, $\overline{ENP}$				30
	U/$\overline{D}$				35
	$\overline{CCLR}$				30
t_h				MIN	0
t_{PLH}		CCK ↑	$\overline{RCO}$	MAX	40
t_{PHL}					40
t_{PLH}		$\overline{ENT}$	$\overline{RCO}$	MAX	20
t_{PHL}					20
t_{PLH}		CCK ↑	Q	MAX	20
t_{PHL}					25
t_{PLH}		RCK ↑	Q	MAX	20
t_{PHL}					25
t_{PLH}		R/C	Q	MAX	25
t_{PHL}					25

UNIT: ns

● Open-Collector Versions of SN74AS240A

Logic Diagram

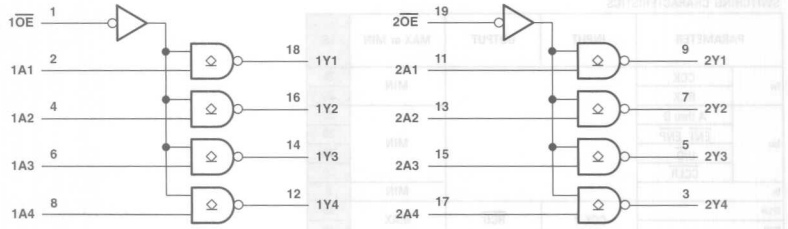

RECOMMENDED OPERATING CONDITIONS

PARAMETER	MAX or MIN	AS	SN74 BCT	UNIT
I_{CC}	MAX	80	86	mA
V_{OH}	MAX	5.5	5.5	V
I_{OL}	MAX	64	64	mA

SWITCHING CHARACTERISTICS

PARAMETER	INPUT	OUTPUT	MAX or MIN	AS	SN74 BCT
t_{PLH}	A	Y	MAX	19	11.3
t_{PHL}				6	4.2
t_{PLH}	$\overline{OE}$	Y	MAX	19.5	16.5
t_{PHL}				7.5	10.3

UNIT:ns

: OBSOLETED or NOT RECOMMENDED NEW DESIGNS

Logic Diagram

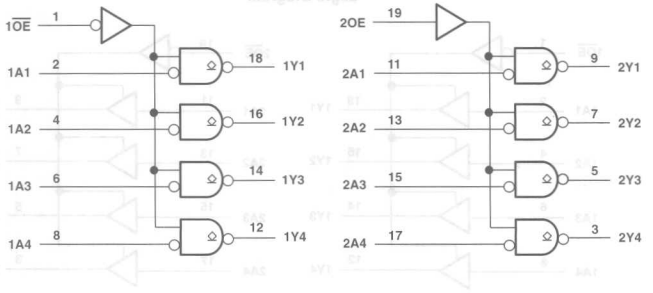

RECOMMENDED OPERATING CONDITIONS

PARAMETER	MAX or MIN	AS	SN74 BCT	SN64 BCT	UNIT
I_{CC}	MAX	95	77	77	mA
V_{OH}	MAX	5.5	5.5	5.5	V
I_{OL}	MAX	64	64	64	mA

SWITCHING CHARACTERISTICS

PARAMETER	INPUT	OUTPUT	MAX or MIN	AS	SN74 BCT	SN64 BCT
t_{PLH}	A	Y	MAX	18.5	10.1	10.1
t_{PHL}				6	6.6	6.6
t_{PLH}	$1\overline{OE}$	1Y	MAX	20	19.7	19.7
t_{PHL}				7	6.9	6.9
t_{PLH}	2OE	2Y	MAX	21	18	18
t_{PHL}				7.5	8.5	8.5

UNIT:ns

760

OCTAL BUFFER/LINE DRIVER/LINE RECEIVER WITH OPEN-COLLECTOR OUTPUTS

- Open-Collector Outputs Drive Bus Lines or Buffer Memory Address Registers
- pnp Inputs Reduce dc Loading
- Open-Collector Versions of SN74ALS244 and SN74AS244

Logic Diagram

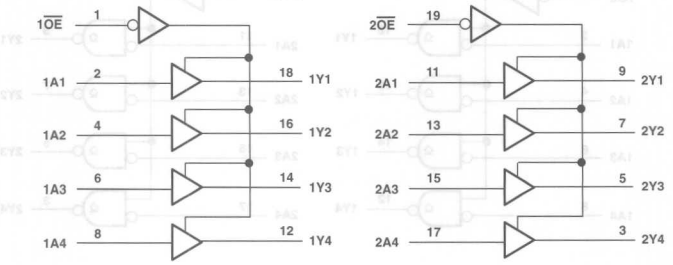

RECOMMENDED OPERATING CONDITIONS

PARAMETER	MAX or MIN	ALS	AS	SN74 BCT	UNIT
I_{CC}	MAX	19	94	76	mA
V_{OH}	MAX	5.5	5.5	5.5	V
I_{OL}	MAX	24	64	64	mA

SWITCHING CHARACTERISTICS

PARAMETER	INPUT	OUTPUT	MAX or MIN	ALS	AS	SN74 BCT
t_{PLH}	A	Y	MAX	15	18.5	10
t_{PHL}				12	6	7.2
t_{PLH}	$\overline{OE}$	Y	MAX	16	18.5	17.5
t_{PHL}				13	7	9.9

UNIT:ns

: OBSOLETED or NOT RECOMMENDED NEW DESIGNS

804

HEX 2-INPUT NAND DRIVERS

- $Y = \overline{A \bullet B}$
- High Capacitive-Drive Capability

Logic Diagram

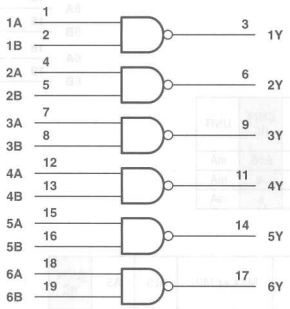

FUNCTION TABLE

INPUTS		OUTPUT
A	B	Y
H	H	L
L	X	H
X	L	H

RECOMMENDED OPERATING CONDITIONS

PARAMETER	MAX or MIN	ALS	AS	SN74 HC	UNIT
I_{CC}	MAX	12	27	0.08	mA
I_{OH}	MAX	-15	-48	-6	mA
I_{OL}	MAX	24	48	6	mA

SWITCHING CHARACTERISTICS

PARAMETER	INPUT	OUTPUT	MAX or MIN	ALS	AS	SN74 HC
t_{PLH}	A, B	Y	MAX	7	4	25
t_{PHL}			MAX	8	4	25

UNIT:ns

PRODUCTION DATA information is current as of publication date. Products conform to specifications per the terms of Texas Instruments standard warranty. Production processing does not necessarily include testing of all parameters. See www.ti.com/sc/logic for the most current data sheets.

805

HEX 2-INPUT NOR DRIVERS

- $Y = \overline{A + B}$
- High Capacitive-Drive Capability

Logic Diagram

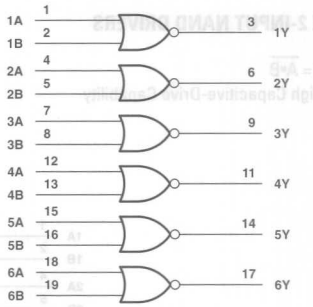

FUNCTION TABLE

INPUTS		OUTPUT
A	B	Y
H	X	L
X	H	L
L	L	H

RECOMMENDED OPERATING CONDITIONS

PARAMETER	MAX or MIN	ALS	AS	SN74 HC	UNIT
I_{CC}	MAX	14	32	0.08	mA
I_{OH}	MAX	-15	-48	-6	mA
I_{OL}	MAX	24	48	6	mA

SWITCHING CHARACTERISTICS

PARAMETER	INPUT	OUTPUT	MAX or MIN	ALS	AS	SN74 HC
t_{PLH}	A, B	Y	MAX	7	4.3	24
t_{PHL}			MAX	8	4.3	24

UNIT:ns

808

HEX 2-INPUT AND DRIVERS

- Y = A + B
- High Capacitive-Drive Capability

Logic Diagram

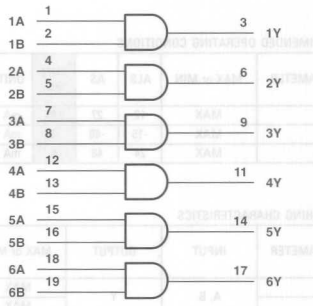

FUNCTION TABLE

INPUTS		OUTPUT
A	B	Y
H	H	H
L	X	L
X	L	L

RECOMMENDED OPERATING CONDITIONS

PARAMETER	MAX or MIN	SN74 HC	AS	UNIT
I_{CC}	MAX	0.08	33	mA
I_{OH}	MAX	-6	-48	mA
I_{OL}	MAX	6	48	mA

SWITCHING CHARACTERISTICS

PARAMETER	INPUT	OUTPUT	MAX or MIN	SN74 HC	AS
t_{PLH}	A, B	Y	MAX	25	6
t_{PHL}			MAX	25	6

UNIT:ns

: OBSOLETED or NOT RECOMMENDED NEW DESIGNS

821

10-BIT BUS INTERFACE FLIP-FLOPS WITH 3-STATE OUTPUT

- Outputs Have Undershoot-Protection Circuitry
- Power-Up High-Impedance State

Logic Diagram

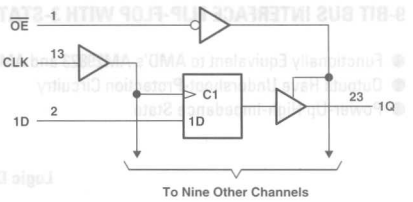

FUNCTION TABLE

INPUTS			OUTPUT
$\overline{OE}$	CLK	D	Q
L	↑	H	H
L	↑	L	L
L	L	X	Q_0
H	X	X	Z

RECOMMENDED OPERATING CONDITIONS

PARAMETER	MAX or MIN	AS	ABT	LVC	UNIT
I_{CC}	MAX	113	38	0.01	mA
I_{OH}	MAX	-24	-32	-24	mA
I_{OL}	MAX	48	64	24	mA

SWITCHING CHARACTERISTICS

PARAMETER	INPUT	OUTPUT	MAX or MIN	AS	ABT	LVC 3V
t_w	High		MIN	8	2.9	3.3
	Low		MIN	8	3.8	3.3
t_{su}			MIN	6	2.1	1.9
t_h			MIN	0	1.3	1.5
t_{PLH}	CLK	Q	MAX	7.5	6.2	7.3
t_{PHL}				13	6.7	7.3
t_{PZH}	$\overline{OE}$	Q	MAX	11	5.8	7.6
t_{PZL}				12	6.3	7.6
t_{PHZ}	$\overline{OE}$	Q	MAX	8	6.7	6.2
t_{PLZ}				8	6.5	6.2

UNIT: ns

PRODUCTION DATA information is current as of publication date. Products conform to specifications per the terms of Texas Instruments standard warranty. Production processing does not necessarily include testing of all parameters. See www.ti.com/sc/logic for the most current data sheets.

823

9-BIT BUS INTERFACE FLIP-FLOP WITH 3-STATE OUTPUT

- Functionally Equivalent to AMD's AM29823 and AM29824
- Outputs Have Undershoot-Protection Circuitry
- Power-Up High-Impedance State

Logic Diagram

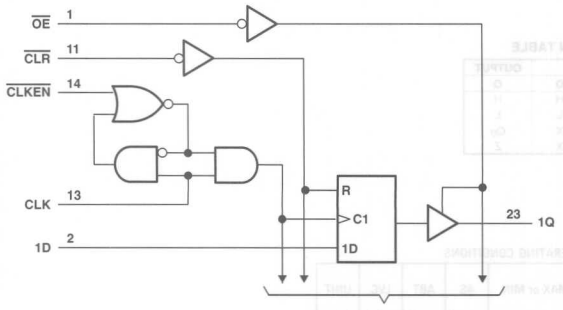

: OBSOLETED or NOT RECOMMENDED NEW DESIGNS

FUNCTION TABLE

INPUTS					OUTPUT
$\overline{OE}$	$\overline{CLR}$	$\overline{CLKEN}$	CLK	D	Q
L	L	X	X	X	L
L	H	L	↑	H	H
L	H	L	↑	L	L
L	H	H	X	X	Q_0
H	X	X	X	X	Z

RECOMMENDED OPERATING CONDITIONS

PARAMETER	MAX or MIN	AS	ABT	LVC 3V	UNIT
I_{CC}	MAX	103	38	0.01	mA
I_{OH}	MAX	-24	-32	-24	mA
I_{OL}	MAX	48	64	24	mA

SWITCHING CHARACTERISTICS

PARAMETER		INPUT	OUTPUT	MAX or MIN	AS	ABT	LVC 3V
t_w	$\overline{CLR}$ "L"			MIN	6.5	5.5	3.3
	CLK "H"				8	2.9	3.3
	CLK "L"				8	3.8	3.3
t_{su}	$\overline{CLR}$			MIN	8	2.5	1
	DATA				6	2.1	1.3
	$\overline{CLKEN}$ "H"				7.5	2	1.8
	$\overline{CLKEN}$ "L"				-	3.3	1.8
t_h	DATA			MIN	-	1.3	2
	$\overline{CLKEN}$ "H"				-	1	-
	$\overline{CLKEN}$ "L"				0	2	1.3
t_{PLH}		CLK	Q	MAX	7.5	6.8	8
t_{PHL}					13	6.7	8
t_{PHL}		$\overline{CLR}$	Q	MAX	15.5	7.1	7.9
t_{PZH}		$\overline{OE}$	Q	MAX	11	6	7.2
t_{PZL}					12	6.5	7.2
t_{PHZ}		$\overline{OE}$	Q	MAX	8	7.5	6
t_{PLZ}					8	6.9	6

UNIT: ns

825

8-BIT BUS INTERFACE FLIP-FLOP WITH 3-STATE OUTPUT

- Improved I_{OH} Specifications (Max: -24mA)
- Outputs Have Undershoot-Protection Circuitry
- Power-Up High-Impedance State

Logic Diagram

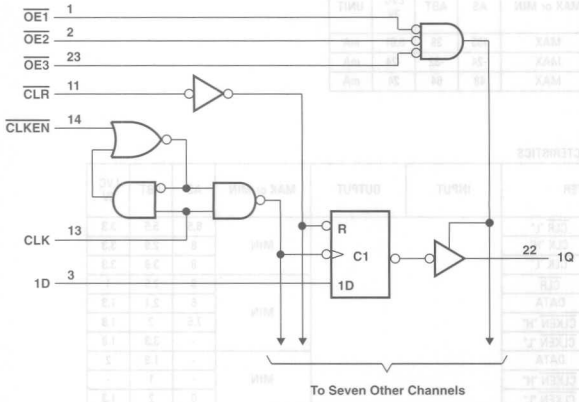

: OBSOLETED or NOT RECOMMENDED NEW DESIGNS

FUNCTION TABLE

INPUTS					OUTPUT
$\overline{OE}$	$\overline{CLR}$	CLKEN	CLK	D	Q
L	L	X	X	X	L
L	H	L	↑	H	H
L	H	L	↑	L	L
L	H	H	X	X	Q_0
H	X	X	X	X	Z

RECOMMENDED OPERATING CONDITIONS

PARAMETER	MAX or MIN	AS	UNIT
I_{CC}	MAX	95	mA
I_{OH}	MAX	-24	mA
I_{OL}	MAX	48	mA

SWITCHING CHARACTERISTICS

PARAMETER		INPUT	OUTPUT	MAX or MIN	AS
t_w	$\overline{CLR}$ "L"			MIN	4
	CLK "H"				8
	CLK "L"				8
t_{su}	$\overline{CLR}$			MIN	8
	DATA				6
	$\overline{CLKEN}$				6
t_h				MIN	0
t_{PLH}		CLK	Q	MAX	7.5
t_{PHL}					13
t_{PHL}		$\overline{CLR}$	Q	MAX	15.5
t_{PZH}		$\overline{OE}$	Q	MAX	11
t_{PZL}					12
t_{PHZ}		$\overline{OE}$	Q	MAX	8
t_{PLZ}					8

UNIT: ns

PRODUCTION DATA information is current as of publication date. Products conform to specifications per the terms of Texas Instruments standard warranty. Production processing does not necessarily include testing of all parameters. See www.ti.com/sc/logic for the most current data sheets.

827

10-BIT BUFFERS/BUS DRIVERS

- 3-State Outputs Drive Bus Lines or Buffer Memory Address Registers
- 74AC11xxx: Product Available in Reduced-Noise Advanced CMOS (11000 Series)
- 74ACT11xxx: Product Available in Reduced-Noise Advanced CMOS (11000 Series)

Logic Diagram

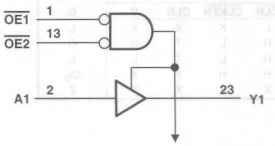

FUNCTION TABLE

INPUTS			OUTPUT
$\overline{OE1}$	$\overline{OE2}$	A	Y
L	L	H	H
L	L	L	L
X	H	X	Z
H	X	X	Z

RECOMMENDED OPERATING CONDITIONS

PARAMETER	MAX or MIN	ABT	AC 11	ACT 11	LVC 3V	UNIT
I_{CC}	MAX	40	0.08	0.08	0.01	mA
I_{OH}	MAX	-32	-24	-24	-24	mA
I_{OL}	MAX	64	24	24	24	mA

SWITCHING CHARACTERISTICS

PARAMETER	INPUT	OUTPUT	MAX or MIN	ABT	AC 11	ACT 11	LVC 3V
t_{PLH}	A	Y	MAX	4.8	8.7	9.2	6.7
t_{PHL}				4.7	9.7	11.2	6.7
t_{PZH}	$\overline{OE}$		MAX	5.9	9.7	11.3	7.3
t_{PZL}				6.9	13	14	7.3
t_{PHZ}	$\overline{OE}$		MAX	6.8	9.1	12	6.7
t_{PLZ}				6.9	8.8	11.6	6.7

UNIT: ns

828

10-BIT BUFFERS/BUS DRIVERS

- 3-State Outputs Drive Bus Lines or Buffer Memory Address Registers
- 74AC11xxx: Product Available in Reduced-Noise Advanced CMOS (11000 Series)
- 74ACT11xxx: Product Available in Reduced-Noise Advanced CMOS (11000 Series)

Logic Diagram

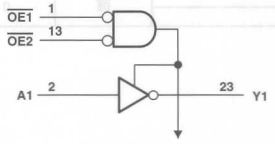

FUNCTION TABLE

INPUTS			OUTPUT
$\overline{OE1}$	$\overline{OE2}$	A	Y
L	L	H	L
L	L	L	H
H	X	X	Z
X	H	X	Z

RECOMMENDED OPERATING CONDITIONS

PARAMETER	MAX or MIN	AC 11	ACT 11	LVC 3V	UNIT
I_{CC}	MAX	0.08	0.08	0.01	mA
I_{OH}	MAX	-24	-24	-24	mA
I_{OL}	MAX	24	24	24	mA

SWITCHING CHARACTERISTICS

PARAMETER	INPUT	OUTPUT	MAX or MIN	AC 11	ACT 11	LVC 3V
t_{PLH}	A	Y	MAX	9.5	10.2	6.7
t_{PHL}				10.4	11.7	6.7
t_{PZH}	$\overline{OE}$		MAX	10.7	12.1	7.3
t_{PZL}				13.2	14.7	7.3
t_{PHZ}	$\overline{OE}$		MAX	9.6	12.3	6.7
t_{PLZ}				9.2	11.7	6.7

UNIT: ns

: OBSOLETED or NOT RECOMMENDED NEW DESIGNS

832

HEX 2-INPUT OR DRIVERS

- Y = A + B
- High Capacitive-Drive Capability

Logic Diagram

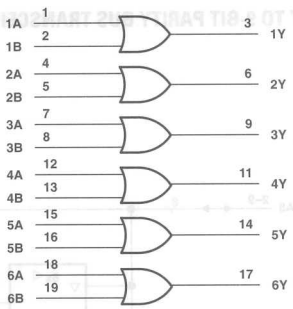

FUNCTION TABLE

INPUTS		OUTPUT
A	B	Y
H	X	H
X	H	H
L	L	L

RECOMMENDED OPERATING CONDITIONS

PARAMETER	MAX or MIN	ALS	AS	SN74 HC	UNIT
I_{CC}	MAX	16	36	0.08	mA
I_{OH}	MAX	-15	-48	-6	mA
I_{OL}	MAX	24	48	6	mA

SWITCHING CHARACTERISTICS

PARAMETER	INPUT	OUTPUT	MAX or MIN	ALS	AS	SN74 HC
t_{PLH}	A, B	Y	MAX	9	6.3	25
t_{PHL}			MAX	8	6.3	25

UNIT:ns

PRODUCTION DATA information is current as of publication date. Products conform to specifications per the terms of Texas Instruments standard warranty. Production processing does not necessarily include testing of all parameters. See www.ti.com/sc/logic for the most current data sheets.

Logic Diagram

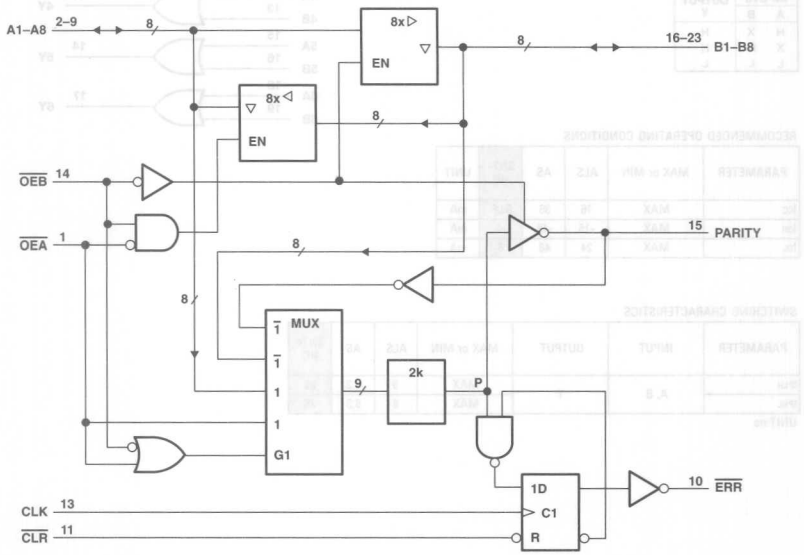

FUNCTION TABLE

INPUTS						OUTPUTS AND I/O				FUNCTION
$\overline{OEB}$	$\overline{OEA}$	$\overline{CLR}$	CLK	Ai Σ OF H's	Bi Σ OF H's	A	B	PARITY	$\overline{ERR}$	
L	H	X	X	Odd Even	NA	NA	A	L H	NA	A data to B bus and generate parity
H	L	H	↑	NA	Odd Even	B	NA	NA	H L	B data to A bus and check parity
X	X	L	X	X	X	X	NA	NA	H	Check error flag register
H	H	H L H H	No↑ No↑ ↑ ↑	X X Odd Even	X	Z	Z	Z	NC H H L	Isolation
L	L	X	X	Odd Even	NA	NA	A	H L	NA	A data to B bus and generate inverted parity

INPUTS		INTERNAL TO DEVICE	OUTPUT PRE-STATE	OUTPUT $\overline{ERR}$	FUNCTION
$\overline{CLR}$	CLK	POINT P	ERR_{n-1}†		
H	↑	H	H	H	Sample
H	↑	X	L	H	
H	↑	L	X	L	
L	X	X	X	H	Clear

† The state of $\overline{ERR}$ before any changes at $\overline{CLR}$, CLK, or point P

RECOMMENDED OPERATING CONDITIONS

PARAMETER	MAX or MIN	ABT	UNIT
I_{CC}	MAX	38	mA
I_{OH}	MAX	-32	mA
I_{OL}	MAX	64	mA

SWITCHING CHARACTERISTICS

PARAMETER	INPUT	OUTPUT	MAX or MIN	ABT
t_{PLH}	A or B	B or A	MAX	5.3
t_{PHL}				5.3
t_{PLH}	A	PARITY	MAX	11.2
t_{PHL}				11
t_{PZH}	$\overline{OE}$	PARITY	MAX	10.5
t_{PZL}				10
t_{PLH}	$\overline{CLR}$	$\overline{ERR}$	MAX	5.2
t_{PHL}	CLK			6.2
t_{PZH}	$\overline{OE}$	A,B, or PARITY	MAX	6.5
t_{PZL}				6.5
t_{PHZ}	$\overline{OE}$	A,B, or PARITY	MAX	7.9
t_{PLZ}				8.1

UNIT: ns

PRODUCTION DATA information is current as of publication date. Products conform to specifications per the terms of Texas Instruments standard warranty. Production processing does not necessarily include testing of all parameters. See www.ti.com/sc/logic for the most current data sheets.

841

10-BIT BUS INTERFACE D-TYPE LATCHES WITH 3-STATE OUTPUTS

- 3-State Buffer-Type Outputs Drive Bus Lines Directly
- Bus-Structured Pinout
- Provide Extra Bus-Driving Latches Necessary for Wider Address/Data Paths or Buses with Parity
- Power-Up High-Impedance State

Logic Diagram

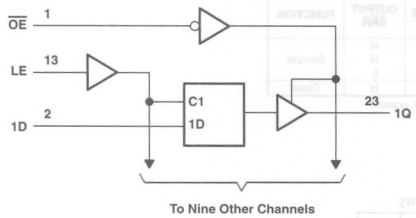

: OBSOLETED or NOT RECOMMENDED NEW DESIGNS

FUNCTION TABLE

INPUTS			OUTPUT
$\overline{OE}$	LE	D	Q
L	H	H	L
L	H	L	H
L	L	X	Q_0
H	X	X	Z

RECOMMENDED OPERATING CONDITIONS

PARAMETER	MAX or MIN	ALS	AS	ABT	LVC 3V	UNIT
I_{CC}	MAX	62	94	38	0.01	mA
I_{OH}	MAX	-2.6	-24	-32	-24	mA
I_{OL}	MAX	24	48	64	24	mA

SWITCHING CHARACTERISTICS

PARAMETER	INPUT	OUTPUT	MAX or MIN	ALS	AS	ABT	LVC 3V
t_w			MIN	20	4	3.3	3.3
t_{su}	High			10	2.5	2.5	2.1
t_{su}	Low			10	2.5	1.5	2.1
t_h				5	2.5	1.5	1
t_{PLH}	D	Q	MAX	13	6.5	6.2	6.7
t_{PHL}				13	10.5	6.2	6.7
t_{PLH}	LE	Q	MAX	21	12	6.5	7.6
t_{PHL}				26	12	6.7	7.6
t_{PZH}	$\overline{OE}$	Q	MAX	12	14	5.3	7.2
t_{PZL}				12	16	6.3	7.2
t_{PHZ}	$\overline{OE}$	Q	MAX	10	8	7.1	5.9
t_{PLZ}				12	8	6.5	5.9

UNIT: ns

PRODUCTION DATA information is current as of publication date. Products conform to specifications per the terms of Texas Instruments standard warranty. Production processing does not necessarily include testing of all parameters. See www.ti.com/sc/logic for the most current data sheets.

9-BIT BUS INTERFACE D-TYPE LATCHES WITH 3-STATE OUTPUTS

Logic Diagram

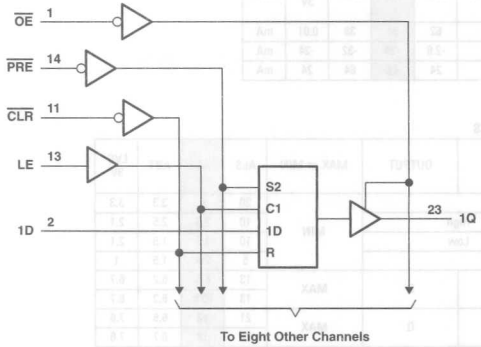

: OBSOLETED or NOT RECOMMENDED NEW DESIGNS

FUNCTION TABLE

INPUTS					OUTPUT
$\overline{PRE}$	$\overline{CLR}$	$\overline{OE}$	LE	D	
L	H	L	X	X	H
H	L	L	X	X	L
L	L	L	X	X	H
H	H	L	H	L	L
H	H	L	H	H	H
H	H	L	L	X	Q_0
X	X	H	X	X	Z

RECOMMENDED OPERATING CONDITIONS

PARAMETER	MAX or MIN	ALS	AS	ABT	UNIT
I_{CC}	MAX	67	92	34	mA
I_{OH}	MAX	-2.6	-24	-32	mA
I_{OL}	MAX	24	48	64	mA

SWITCHING CHARACTERISTICS

PARAMETER		INPUT	OUTPUT	MAX or MIN	ALS	AS	ABT
t_w	$\overline{CLR}$ "L"			MIN	35	4	5.5
	$\overline{PRE}$ "L"				35	4	4.5
	LE "H"				20	4	-
	LE "L"				-	4	3.4
t_{su}	LE "L"			MIN	10	2.5	2.5
	LE "H"				10	2.5	3
	$\overline{PRE}$ inactive				-	15	1.6
	$\overline{CLR}$ inactive				-	14	2
t_h	LE "L"			MIN	5	2.5	1
	LE "H"				5	2.5	1.5
t_{PLH}		D	Q	MAX	13	6.5	6.7
t_{PHL}					18	9	7.2
t_{PLH}		LE	Q	MAX	21	12	7.2
t_{PHL}					26	12	6.9
t_{PLH}		$\overline{CLR}$	Q	MAX	-	-	7.1
t_{PHL}					23	13	8
t_{PLH}		$\overline{PRE}$	Q	MAX	22	10	7.4
t_{PHL}					-	-	7.2
t_{PZH}		$\overline{OE}$	Q	MAX	12	10.5	5.7
t_{PZL}					14	13.5	6.5
t_{PHZ}		$\overline{OE}$	Q	MAX	10	8	6.8
t_{PLZ}					12	8	5.9

UNIT: ns

Logic Diagram

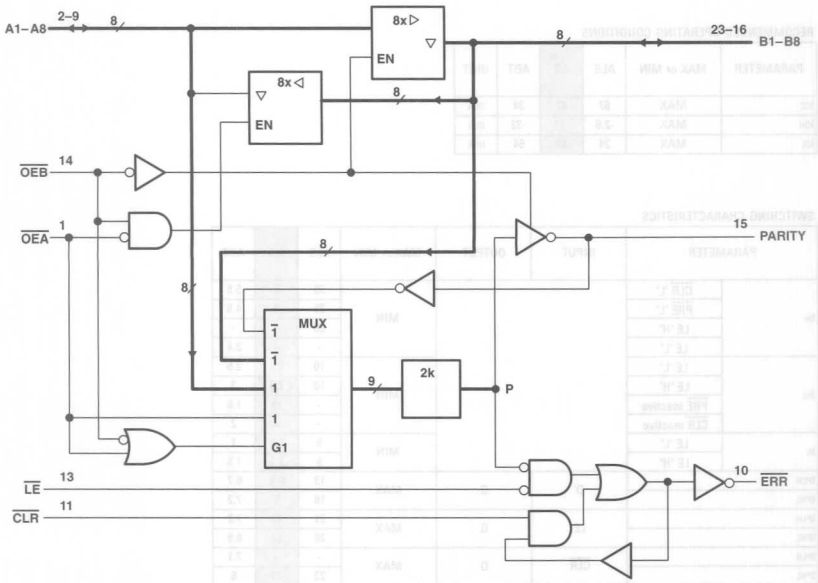

: OBSOLETED or NOT RECOMMENDED NEW DESIGNS

FUNCTION TABLE

INPUTS						OUTPUT AND I/Os				FUNCTION
$\overline{OEB}$	$\overline{OEA}$	$\overline{CLR}$	LE	Ai Σ OF H	Bi† Σ OF H	A	B	PARITY	$\overline{ERR}$‡	
L	H	X	X	Odd Even	NA	NA	A	L H	NA	A data to B bus and generate parity
H	L	H	L	NA	Odd Even	B	NA	NA	H L	B data to A bus and check parity
H	L	H	H	X	X	X	NA	NA	NC	Store error flag
X	X	L	H	X	X	X	NA	NA	H	Clear error flag register
H	H	H L H H	H H L L	X X L Odd H Even	X	Z	Z	Z	NC H H L	Isolation§ (parity check)
L	L	X	X	Odd Even	NA	NA	A	H L	NA	A data to B bus and generate inverted parity

INPUTS		INTERNAL TO DEVICE	OUTPUT PRE-STATE	OUTPUT $\overline{ERR}$	FUNCTION
$\overline{CLR}$	LE	POINT P	$\overline{ERR}_{n-1}$†		
L	L	L H	X	L H	Pass
H	L	L X H	X L H	L L H	Sample
L	H	X	X	H	Clear
H	H	X	L H	L H	Store

RECOMMENDED OPERATING CONDITIONS

PARAMETER	MAX or MIN	ABT	UNIT
I_{CC}	MAX	38	mA
I_{OH}	MAX	-32	mA
I_{OL}	MAX	64	mA

SWITCHING CHARACTERISTICS

PARAMETER	INPUT	OUTPUT	MAX or MIN	ABT
t_{PLH}	A or B	B or A	MAX	5.3
t_{PHL}				5.3
t_{PLH}	A	PARITY	MAX	11.2
t_{PHL}				11
t_{PLH}	$\overline{OE}$	PARITY	MAX	10.5
t_{PHL}				10
t_{PLH}	$\overline{CLR}$	$\overline{ERR}$	MAX	6.2
t_{PLH}	$\overline{LE}$	ERR	MAX	6
t_{PHL}				6.6
t_{PLH}	B or RARITY	ERR	MAX	11.7
t_{PHL}				12.8
t_{PZH}	$\overline{OE}$	A or B or PARITY	MAX	6.7
t_{PZL}				6.7
t_{PHZ}	$\overline{OE}$	A or B or PARITY	MAX	7.9
t_{PLZ}				8.1

UNIT: ns

857

HEX 2-TO-1 UNIVERSAL MULTIPLEXERS

- Select True or Complementary Data
- Perform AND/NAND (Masking) of A or B Operand
- Cascadable to Expand Number of Operands
- Detect Zeros on A or B Operands
- 3-State Outputs Interface Directly with System Bus

Logic Diagram

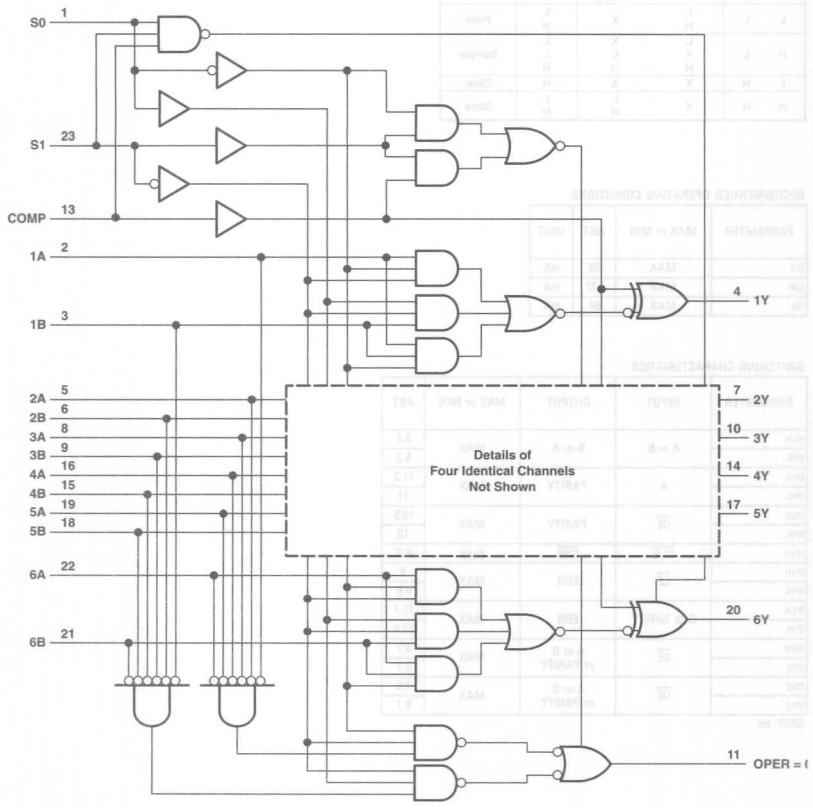

: OBSOLETED or NOT RECOMMENDED NEW DESIGNS

L	H	H	L	L
H	L	L	$\overline{A}$	H = all A inputs L
H	L	H	$\overline{B}$	H = all B inputs L
H	H	L	$\overline{A+B}$	Z
H	H	H	Z	Z

RECOMMENDED OPERATING CONDITIONS

PARAMETER		MAX or MIN	ALS	AS	UNIT
I_{CCZ}		MAX	36	135	mA
I_{CCL}		MAX	33	175	mA
I_{OH}	Y	MAX	-2.6	-15	mA
	OPER = 0	MAX	-2.6	-2	mA
I_{OL}	Y	MAX	24	48	mA
	OPER = 0	MAX	24	20	mA

SWITCHING CHARACTERISTICS

PARAMETER	INPUT	OUTPUT	MAX or MIN	ALS	AS
t_{pd}	A or B (COMP = "H")	Y inverting	MAX	14	12
t_{pd}	A or B (COMP = "L")	Y non-inverting	MAX	14	10
t_{pd}	S0 or S1	Y	MAX	33	13
t_{pd}	COMP	Y		18	13
t_{pd}	A or B	OPER = 0		37	14
t_{pd}	S0 to S1	OPER = 0		23	18
t_{en}	S0 to S1	Y	MAX	35	12
t_{dis}				23	11
t_{en}	COMP	Y	MAX	24	12
t_{dis}				21	9
t_{en}	S0	OPER = 0	MAX	20	12
t_{dis}				27	9
t_{en}	S1	OPER = 0	MAX	25	12
t_{dis}				19	9
t_{en}	COMP	OPER = 0	MAX	25	13
t_{dis}				20	9

UNIT: ns

861

10-BIT TRANSCEIVERS WITH 3-STATE OUTPUTS

Logic Diagram

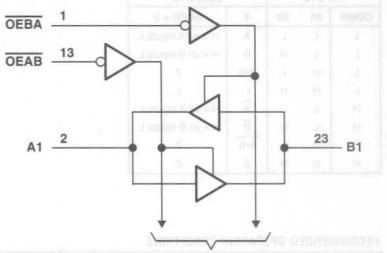

FUNCTION TABLE

INPUTS		OPERATION
$\overline{OEAB}$	$\overline{OEBA}$	
L	H	A data to B bus
H	L	B data to A bus
H	H	Isolation
L	L	Latch A and B (A = B)

RECOMMENDED OPERATING CONDITIONS

PARAMETER	MAX or MIN	ABT	LVC 3V	UNIT
I_{CC}	MAX	38	0.01	mA
I_{OH}	MAX	-32	-24	mA
I_{OL}	MAX	64	24	mA

SWITCHING CHARACTERISTICS

PARAMETER	INPUT	OUTPUT	MAX or MIN	ABT	LVC 3V
t_{PLH}	A or B	B or A	MAX	5.2	6.4
t_{PHL}				4.9	6.4
t_{PZH}	$\overline{OEAB}$ or $\overline{OEBA}$	B or A	MAX	5.9	7
t_{PZL}				6.9	7
t_{PHZ}	$\overline{OEAB}$ or $\overline{OEBA}$	B or A	MAX	7.5	5.9
t_{PLZ}				7.1	5.9

UNIT: ns

: OBSOLETED or NOT RECOMMENDED NEW DESIGNS

863

9-BIT BUS TRANSCEIVER WITH 3-STATE OUTPUTS

- 3-State Outputs

Logic Diagram

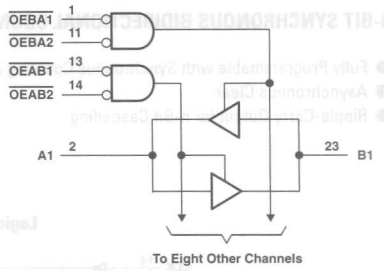

FUNCTION TABLE

INPUTS				OPERATION
OEAB1	OEAB2	OEBA1	OEBA2	
L	L	L	L	Latch A and B
L	L	H	X	A to B
L	L	X	H	
H	X	L	L	B to A
X	H	L	L	
H	X	H	X	Isolation
H	X	X	H	
X	H	X	H	
X	H	H	X	

RECOMMENDED OPERATING CONDITIONS

PARAMETER	MAX or MIN	ABT	LVC 3V	UNIT
I_{CC}	MAX	38	0.01	mA
I_{OH}	MAX	-32	-24	mA
I_{OL}	MAX	64	24	mA

SWITCHING CHARACTERISTICS

PARAMETER	INPUT	OUTPUT	MAX or MIN	ABT	LVC 3V
t_{PLH}	A or B	B or A	MAX	5.7	6.1
t_{PHL}				3.9	6.1
t_{PZH}	$\overline{OE}$	A or B	MAX	5.5	7.2
t_{PZL}				5.4	7.2
t_{PHZ}	$\overline{OE}$	A or B	MAX	6.7	6.3
t_{PLZ}				6.9	6.3

UNIT: ns

PRODUCTION DATA information is current as of publication date. Products conform to specifications per the terms of Texas Instruments standard warranty. Production processing does not necessarily include testing of all parameters. See www.ti.com/sc/logic for the most current data sheets.

Logic Diagram

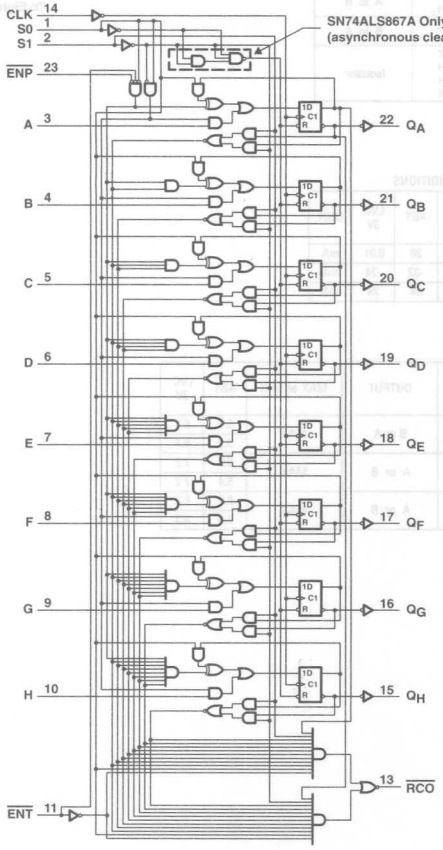

FUNCTION TABLE

S1	S0	FUNCTION
L	L	Clear
L	H	Count down
H	L	Load
H	H	Count up

RECOMMENDED OPERATING CONDITIONS

PARAMETER	MAX or MIN	ALS	AS	UNIT
I_{CC}	MAX	45	195	mA
I_{OH}	MAX	-0.4	-2	mA
I_{OL}	MAX	8	20	mA

SWITCHING CHARACTERISTICS

PARAMETER	INPUT	OUTPUT	MAX or MIN	ALS	AS
f_{max}			MIN	35	50
t_w	CLK (clock)		MIN	14	10
	S0 and S1 (clear)			10	10
t_{su}	Data input A-H		MIN	10	4
	$\overline{ENP}$ or $\overline{ENT}$			15	8
	S0 low and S1 high (load)			12	10
	S0 and S1 low (clear)			-	10
	S0 high and S1 low (count down)			12	40
	S0 and S1 high (count up)			12	40
t_h	S0 high after S1 ↑ or S1 high after S0 ↑		MIN	3	-
	Data input A-H			0	0
t_{PLH}	CLK	$\overline{RCO}$	MAX	14	22
t_{PHL}				14	16
t_{PLH}	CLK	Any Q	MAX	16	11
t_{PHL}				16	15
t_{PLH}	$\overline{ENT}$	$\overline{RCO}$	MAX	14	10
t_{PHL}				9	17
t_{PLH}	$\overline{ENP}$	$\overline{RCO}$	MAX	-	14
t_{PHL}				-	17
t_{PHL}	S0, S1 (clear mode)	Any Q	MAX	26	-
t_{PLH}	S0 or S1 (count up/down)	$\overline{RCO}$	MAX	16	-
t_{PHL}				16	-
t_{PHL}	S0 or S1 (clear mode)	$\overline{RCO}$	MAX	16	21

UNIT fmax : MHz other : ns

869

8-BIT SYNCHRONOUS BIDIRECTIONAL COUNTER

- Fully Programmable with Synchronous Counting and Loading
- Synchronous Clear
- Ripple-Carry Output for n-Bit Cascading

Logic Diagram

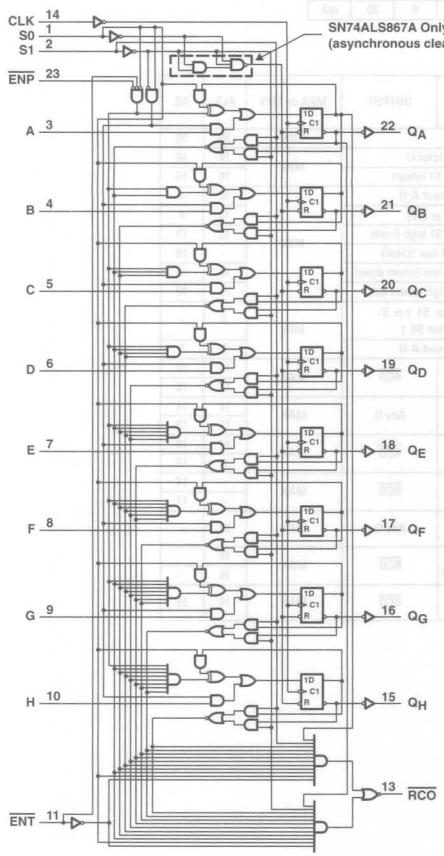

: OBSOLETED or NOT RECOMMENDED NEW DESIGNS

FUNCTION TABLE

S1	S0	FUNCTION
L	L	Clear
L	H	Count down
H	L	Load
H	H	Count up

RECOMMENDED OPERATING CONDITIONS

PARAMETER	MAX or MIN	ALS	AS	UNIT
I_{CC}	MAX	45	195	mA
I_{OH}	MAX	-0.4	-2	mA
I_{OL}	MAX	8	20	mA

SWITCHING CHARACTERISTICS

PARAMETER	INPUT	OUTPUT	MAX or MIN	ALS	AS
f_{max}			MIN	35	45
t_w	CLK		MIN	14	11
t_{su}	Data input A-H		MIN	10	5
	$\overline{ENP}$ or $\overline{ENT}$			15	9
	S0 low and S1 high (load)			13	11
	S0 and S1 low (clear)			13	11
	S0 high and S1 low (count down)			13	50
	S0 and S1 high (count up)			13	50
t_h	S0 high after S1 ↑ or S1 high after S0 ↑		MIN	3	-
	Data input A-H			0	0
t_{PLH}	CLK	$\overline{RCO}$	MAX	14	35
t_{PHL}				14	18
t_{PLH}	CLK	Any Q	MAX	16	11
t_{PHL}				16	15
t_{PLH}	$\overline{ENT}$	$\overline{RCO}$	MAX	14	15
t_{PHL}				9	17
t_{PLH}	$\overline{ENP}$	$\overline{RCO}$	MAX	-	19
t_{PHL}				-	18
t_{PLH}	S1 (count up/down)	$\overline{RCO}$	MAX	15	-
t_{PHL}				15	-
t_{PLH}	S0 (clear/load)	$\overline{RCO}$	MAX	16	-
t_{PHL}				12	-

UNIT fmax : MHz other : ns

Logic Diagram

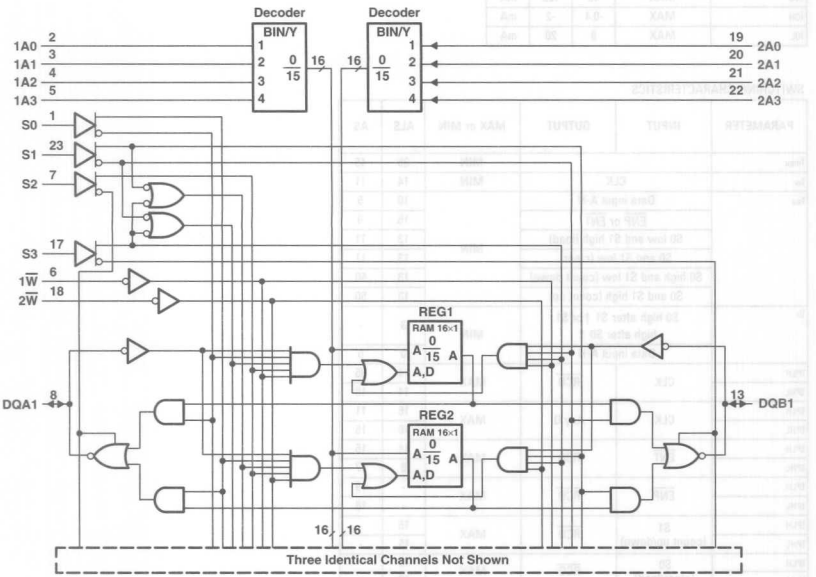

: OBSOLETED or NOT RECOMMENDED NEW DESIGNS

FUNCTION TABLE

FILE SELECT			INPUT/OUTPUT		
S0	S1	FILE SEL	S2	S3	I/O SEL
L	L	1R to A, 1R to B	L	L	A out B A out, B out
H	L	2R to A, 1R to B			
L	H	1R to A, 2R to B			
H	H	2R to A, 2R to B			
L	L	A to 1R, 1R to B	H	L	A in B A in, B out
H	L	A to 2R, 1R to B			
L	H	A to 1R, 2R to B			
H	H	A to 2R, 2R to B			
L	L	1R to A, B to 1R	L	H	A out B A out, B in
H	L	2R to A, B to 1R			
L	H	1R to A, B to 2R			
H	H	2R to A, B to 2R			
L	L	B to 1R	H	H	A in Bin A in, B
H	L	A to 2R, B to 1R			
L	H	A to 1R, B to 2R			
H	H	B to 2R			

RECOMMENDED OPERATING CONDITIONS

PARAMETER	MAX or MIN	ALS	AS	UNIT
I_{CC}	MAX	110	190	mA
I_{OL}	MAX	24	48	mA
I_{OH}	MAX	-2.6	-15	mA

SWITCHING CHARACTERISTICS

PARAMETER	INPUT	OUTPUT	MAX or MIN	ALS	AS
t_w	write		MIN	12	12
t_{su}	Address before write ↓		MIN	5	5
	Data before write ↑			15	15
	Select before write ↓			12	12
t_h	Address before write ↓		MIN	0	0
	Data before write ↑			0	0
	Select before write ↓			12	12
$t_{a(A)}$	Any A	Any DQ	MAX	19	15
$t_{a(S)}$	S0	Any DQA	MAX	15	13
	S1	Any DQB		15	13
t_{dis}	S2	Any DQA	MAX	14	11
	S3	Any DQB		14	11
t_{en}	S2	Any DQA	MAX	17	12
	S3	Any DQB		17	12
t_{pd}	$\overline{W}$	Any $\overline{DQ}$	MAX	23	19
	DA	DQB		26	22
	DQB	DQA		26	22

UNIT: ns

873

DUAL 4-BIT D-TYPE LATCHES

- 3-State Buffer-Type Outputs Drive Bus Lines Directly
- Bus-Structured Pinout
- Asynchronous Clear

Logic Diagram

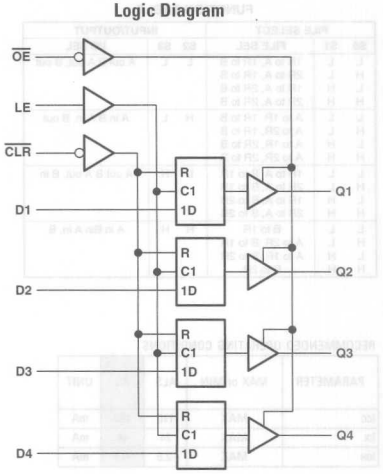

FUNCTION TABLE

INPUTS				OUTPUT
$\overline{OE}$	$\overline{CLR}$	ENABLE LE	D	
L	L	X	X	L
L	H	H	H	H
L	H	H	L	L
L	H	L	X	Q_0
H	X	X	X	Z

RECOMMENDED OPERATING CONDITIONS

PARAMETER	MAX or MIN	ALS	AS	UNIT
I_{CC}	MAX	31	129	mA
I_{OH}	MAX	-2.6	-15	mA
I_{OL}	MAX	24	48	mA

SWITCHING CHARACTERISTICS

PARAMETER		INPUT	OUTPUT	MAX or MIN	ALS	AS
t_w	$\overline{CLR}$ low			MIN	15	5
	LE high				10	5
t_{su}					10	2
t_h					7	4.5
t_{PLH}		D	Q	MAX	14	9.5
t_{PHL}					14	7.5
t_{PLH}		LE	Q	MAX	22	13
t_{PHL}					21	7.5
t_{PHL}		$\overline{CLR}$	Q	MAX	20	9
t_{PZH}		$\overline{OE}$	Q	MAX	18	6.5
t_{PZL}					18	10.5
t_{PHZ}		$\overline{OE}$	Q	MAX	10	7.5
t_{PLZ}					15	7.5

UNIT: ns

: OBSOLETED or NOT RECOMMENDED NEW DESIGNS

874

DUAL 4-BIT D-TYPE EDGE-TRIGGERD FLIP-FLOPS

- 3-State Buffer-Type Outputs Drive Bus Lines Directly
- Bus-Structured Pinout
- Asynchronous Clear

Logic Diagram

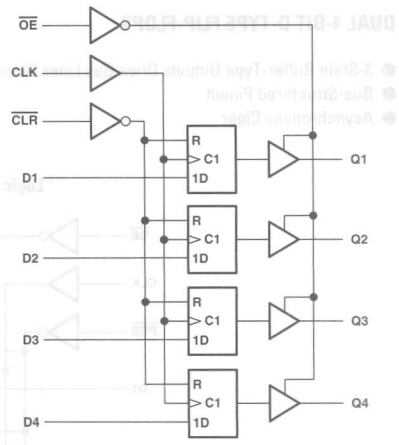

FUNCTION TABLE

INPUTS				OUTPUTS
$\overline{OE}$	$\overline{CLR}$	CLK	D	
L	L	X	X	L
L	H	↑	H	H
L	H	↑	L	L
L	H	L	X	Q_0
H	X	X	X	Z

RECOMMENDED OPERATING CONDITIONS

PARAMETER	MAX or MIN	ALS	AS	UNIT
I_{CC}	MAX	32	160	mA
I_{OH}	MAX	-2.6	-15	mA
I_{OL}	MAX	24	48	mA

SWITCHING CHARACTERISTICS

PARAMETER	INPUT	OUTPUT	MAX or MIN	ALS	AS
f_{max}			MIN	30	125
t_w	$\overline{PRE}$ or $\overline{CLR}$ low		MIN	10	2
	CLK "H"			16.5	3
	CLK "L"			16.5	4
t_{su}	Data		MIN	15	2
	$\overline{PRE}$ or $\overline{CLR}$ inactive			10	4
t_h			MIN	0	1
t_{PLH}	CLK	Q	MAX	14	8.5
t_{PHL}				14	10.5
t_{PHL}	$\overline{CLR}$	Q	MAX	17	9.5
t_{PZH}	$\overline{OE}$	Q	MAX	18	7
t_{PZL}				18	10.5
t_{PHZ}	$\overline{OE}$	Q	MAX	10	6
t_{PLZ}				12	7.5

UNIT fmax : MHz other : ns

PRODUCTION DATA information is current as of publication date. Products conform to specifications per the terms of Texas Instruments standard warranty. Production processing does not necessarily include testing of all parameters. See www.ti.com/sc/logic for the most current data sheets.

876

DUAL 4-BIT D-TYPE FLIP-FLOPS

- 3-State Buffer-Type Outputs Drive Bus Lines Directly
- Bus-Structured Pinout
- Asynchronous Clear

Logic Diagram

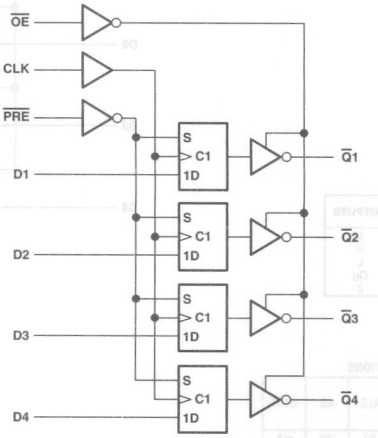

: OBSOLETED or NOT RECOMMENDED NEW DESIGNS

FUNCTION TABLE
(each filip-flop)

INPUTS				OUTPUT
$\overline{OE}$	$\overline{PRE}$	CLK	D	$\overline{Q}$
L	L	X	X	L
L	H	↑	H	L
L	H	↑	L	H
L	H	L	X	$\overline{Q}_0$
H	X	X	X	Z

RECOMMENDED OPERATING CONDITIONS

PARAMETER	MAX or MIN	ALS	AS	UNIT
I_{CC}	MAX	31	160	mA
I_{OH}	MAX	-2.6	-15	mA
I_{OL}	MAX	24	48	mA

SWITCHING CHARACTERISTICS

PARAMETER		INPUT	OUTPUT	MAX or MIN	ALS	AS
f_{max}				MIN	30	80
t_w	$\overline{PRE}$ "L"			MIN	10	4.5
	CLK "H"				16.5	6.2
	CLK "L"				16.5	6.2
t_{su}	Data			MIN	15	4.5
	$\overline{PRE}$ inactive				10	5
t_h				MIN	0	2
t_{PLH}		CLK	$\overline{Q}$	MAX	14	8.5
t_{PHL}					14	10.5
t_{PHL}		$\overline{PRE}$	$\overline{Q}$	MAX	19	9.5
t_{PZH}		$\overline{OE}$	$\overline{Q}$	MAX	18	7
t_{PZL}					18	11
t_{PHZ}		$\overline{OE}$	$\overline{Q}$	MAX	10	7
t_{PLZ}					13	7

UNIT f_{max} : MHz, other : ns

PRODUCTION DATA information is current as of publication date. Products conform to specifications per the terms of Texas Instruments standard warranty. Production processing does not necessarily include testing of all parameters. See www.ti.com/sc/logic for the most current data sheets.

885

8-BIT MAGNITUDE COMPARATOR

- SN54AS885 Latchable P-Input Ports with Power-Up Clear
- Choice of Logical or Arithmetic (Two's Complement) Comparison
- Data and PLE Inputs Utilize pnp Input Transistors to Reduce dc Loading Effects
- Cascadable to n Bits While Maintaining High Performance

Logic Diagram

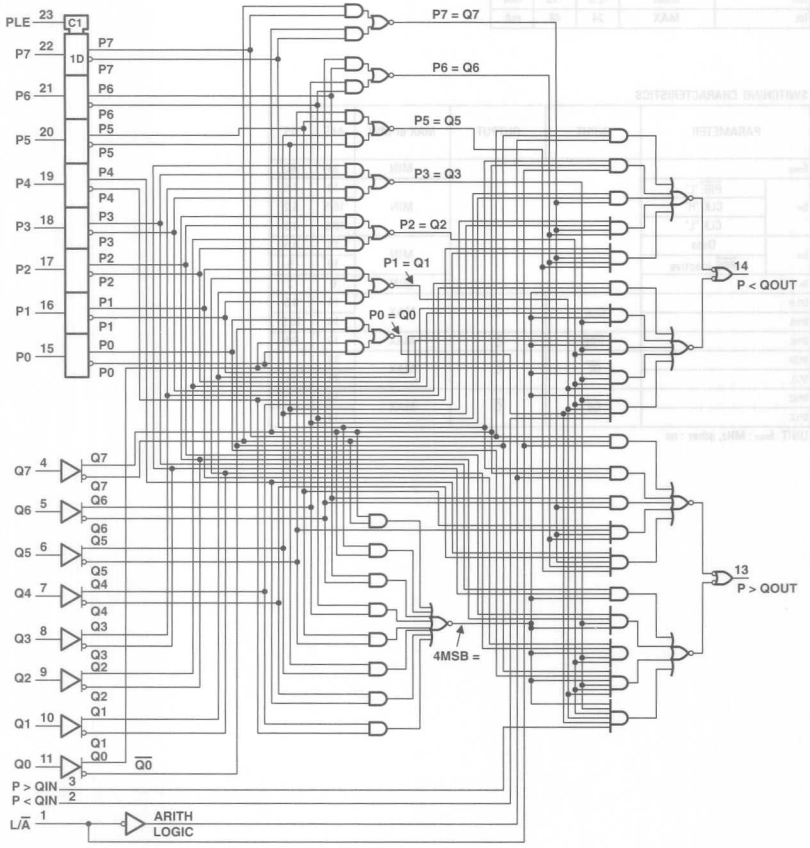

: OBSOLETED or NOT RECOMMENDED NEW DESIGNS

FUNCTION TABLE

COMPARISON	INPUTS				OUTPUTS	
	L/A	DATA P0–P7, Q0–Q7	P > QIN	P < QIN	P > QOUT	P < QOUT
Logical	H	P > Q	X	X	H	L
Logical	H	P < Q	X	X	L	H
Logical†	H	P = Q	H or L	H or L	H or L	H or L
Arithmetic	L	P AG Q	X	X	H	L
Arithmetic	L	Q AG P	X	X	L	H
Arithmetic†	L	P = Q	H or L	H or L	H or L	H or L

† In these cases, P > QOUT follows P > QIN and P < QOUT follows P < QIN.
AG = arithmetically greater than

RECOMMENDED OPERATING CONDITIONS

PARAMETER	MAX or MIN	AS	UNIT
I_{CC}	MAX	210	mA
I_{OH}	MAX	-2	mA
I_{OL}	MAX	20	mA

SWITCHING CHARACTERISTICS

PARAMETER	INPUT	OUTPUT	MAX or MIN	AS
t_{su}	Data before PLE ↓		MIN	2
t_h	Data after PLE ↓			4
t_{PLH}	L/$\overline{A}$	P < QOUT, P > QOUT	MAX	13
t_{PHL}				13
t_{PLH}	P < QIN, P > QIN	P < QOUT, P > QOUT	MAX	8
t_{PHL}				8
t_{PLH}	Any P or Q data input	P < QOUT, P > QOUT	MAX	17.5
t_{PHL}				15

UNIT: ns

990

8-BIT D-TYPE TRANSPARENT READ-BACK LATCHES

- 3-State I/O-Type Read-Back Inputs
- True Logic Outputs
- Bus-Structured Pinout

Logic Diagram

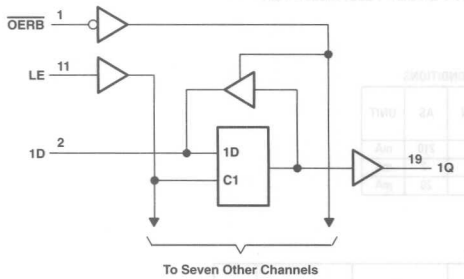

RECOMMENDED OPERATING CONDITIONS

PARAMETER		MAX or MIN	ALS	UNIT
I_{CC}		MAX	70	mA
I_{OH}	Q	MAX	-2.6	mA
	D		-0.4	mA
I_{OL}	Q	MAX	24	mA
	D		8	mA

SWITCHING CHARACTERISTICS

PARAMETER	INPUT	OUTPUT	MAX or MIN	ALS
t_w	LE high		MIN	10
t_{su}	Data before LE ↓		MIN	10
	Data before $\overline{OERB}$			10
t_h	Data after LE ↓		MIN	5
t_{PLH}	D	Q	MAX	17
t_{PHL}				24
t_{PLH}	LE	Q	MAX	26
t_{PHL}				26
t_{en}	$\overline{OERB}$	D	MAX	21
t_{dis}			MAX	19

UNIT: ns

: OBSOLETED or NOT RECOMMENDED NEW DESIGNS

992

9-BIT D-TYPE TRANSPARENT

- 3-State I/O-Type Read-Back Inputs
- True Logic Outputs
- Bus-Structured Pinout
- Designed with Nine Bits for Parity Applications

Logic Diagram

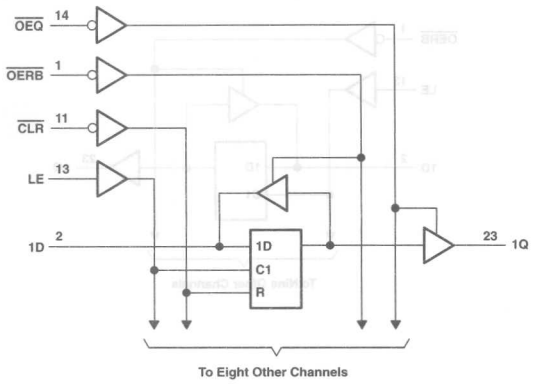

RECOMMENDED OPERATING CONDITIONS

PARAMETER		MAX or MIN	ALS	UNIT
I_{CC}		MAX	80	mA
I_{OH}	Q	MAX	-2.6	mA
	D		-0.4	mA
I_{OL}	Q	MAX	24	mA
	D		8	mA

SWITCHING CHARACTERISTICS

PARAMETER	INPUT	OUTPUT	MAX or MIN	ALS
t_w	C "H"		MIN	10
	CLR "L"			10
t_{su}	Data befor LE ↓		MIN	10
	Data befor $\overline{OERB}$ ↓			10
t_h	Data affter LE ↓		MIN	5
t_{PLH}	D	Q	MAX	14
t_{PHL}				16
t_{PLH}	LE	Q	MAX	20
t_{PHL}				25
t_{PHL}	$\overline{CLR}$	Q	MAX	20
		D		26
t_{en}	$\overline{OERB}$	D	MAX	21
t_{dis}				14
t_{en}	$\overline{OEQ}$	Q	MAX	18
t_{dis}				14

UNIT:ns

PRODUCTION DATA information is current as of publication date. Products conform to specifications per the terms of Texas Instruments standard warranty. Production processing does not necessarily include testing of all parameters. See www.ti.com/sc/logic for the most current data sheets.

994

10-BIT D-TYPE TRANSPARENT READ-BACK LATCHES

- 3-State I/O-Type Read-Back Inputs
- True Logic Outputs
- Bus-Structured Pinout

Logic Diagram

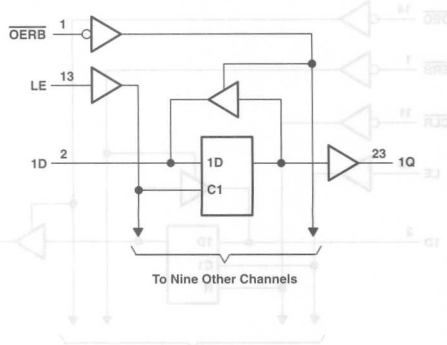

: OBSOLETED or NOT RECOMMENDED NEW DESIGNS

RECOMMENDED OPERATING CONDITIONS

PARAMETER		MAX or MIN	ALS	UNIT
I_{CC}		MAX	82	mA
I_{OH}	Q	MAX	-2.6	mA
	D		-0.4	mA
I_{OL}	Q	MAX	24	mA
	D		8	mA

SWITCHING CHARACTERISTICS

PARAMETER	INPUT	OUTPUT	MAX or MIN	ALS
t_w	C "H"		MIN	10
t_{su}	Data befor LE ↓		MIN	10
	Data befor $\overline{OERB}$ ↓			10
t_h	Data affter LE ↓		MIN	5
t_{PLH}	D	Q	MAX	14
t_{PHL}				18
t_{PLH}	LE	Q	MAX	21
t_{PHL}				27
t_{en}	$\overline{OERB}$	D	MAX	21
t_{dis}				16

UNIT:ns

996

8-BIT D-TYPE EDGE-TRIGGERED READ-BACK LATCHES

- 3-State I/O-Type Read-Back Inputs
- True Logic Outputs
- T/C Determines True or Complementary Data at Q Outputs

Logic Diagram

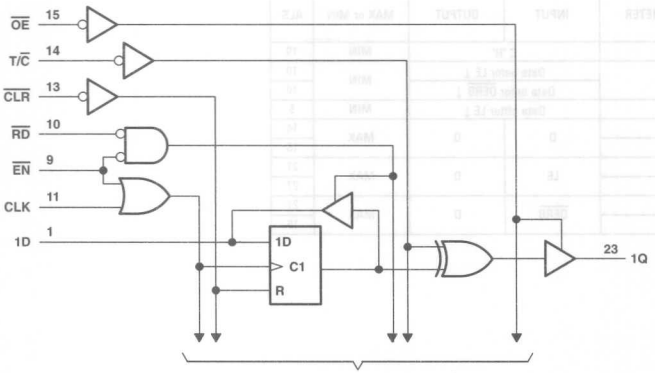

: OBSOLETED or NOT RECOMMENDED NEW DESIGNS

RECOMMENDED OPERATING CONDITIONS

PARAMETER		MAX or MIN	ALS	UNIT
I_{CC}		MAX	85	mA
I_{OL}	Q	MAX	24	mA
	D		8	mA
I_{OH}	Q	MAX	-2.6	mA
	D		-0.4	mA

SWITCHING CHARACTERISTICS

PARAMETER	INPUT	OUTPUT	MAX or MIN	ALS
t_w	$\overline{CLR}$ low		MIN	10
	CLK low			14.5
	CLK high			14.5
t_{su}	Data before CLK ↑		MIN	15
	$\overline{EN}$ low before CLK ↑			10
	CLK high before $\overline{EN}$ ↑*1			15
	$\overline{CLR}$ high (inactive) before CLK ↑			10
t_h	Data after CLK ↑		MIN	0
	$\overline{EN}$ low after CLK ↑			5
	$\overline{RD}$ high after CLK ↑*2			5
t_{PLH}	CLK ($T/\overline{C}$ = H or L)	Q	MAX	28
t_{PHL}				28
t_{PLH}	$\overline{CLR}$ ($T/\overline{C}$ = L)	Q	MAX	27
t_{PHL}	$\overline{CLR}$ ($T/\overline{C}$ = H)			23
t_{PLH}	$T/\overline{C}$	Q	MAX	23
t_{PHL}				23
t_{PHL}	$\overline{CLR}$	D	MAX	30
t_{en}*3	$\overline{RD}$	D	MAX	16
t_{dis}*4				19
t_{en}*3	$\overline{EN}$	D	MAX	16
t_{dis}*4				19
t_{en}*3	$\overline{OE}$	Q	MAX	15
t_{dis}*4				10

UNIT: ns

*1 This setup time ensures that EN will not false clock the date register.

*2 This hold time ensures that there will be no conflict on the input date bus.

*3 = t_{PZH} or t_{PZL}

*4 = t_{PHZ} or t_{PLZ}

1000

QUAD 2-INPUT NAND BUFFERS/DRIVERS

- Buffer Version of SN74ALS00A
- Driver Version of SN74AS00
- High Capacitive-Drive Capability

Logic Diagram

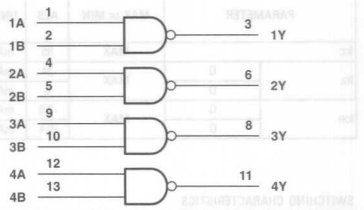

FUNCTION TABLE

INPUTS		OUTPUT
A	B	Y
H	H	L
L	X	H
X	L	H

RECOMMENDED OPERATING CONDITIONS

PARAMETER	MAX or MIN	ALS	AS	UNIT
I_{CC}	MAX	7.8	19	mA
I_{OH}	MAX	-2.6	-48	mA
I_{OL}	MAX	24	48	mA

SWITCHING CHARACTERISTICS

PARAMETER	INPUT	OUTPUT	MAX or MIN	ALS	AS
t_{PLH}	A or B	Y	MAX	8	4
t_{PHL}				7	4

UNIT: ns

1004

HEX INVERTING DRIVERS

- Driver Version of SN74ALS04B and SN74AS04
- High Capacitive-Drive Capability

Logic Diagram

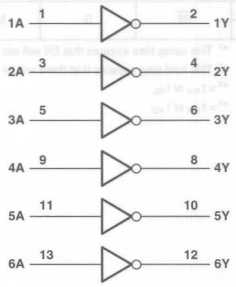

FUNCTION TABLE

INPUT A	OUTPUT Y
H	L
L	H

RECOMMENDED OPERATING CONDITIONS

PARAMETER	MAX or MIN	ALS	AS	UNIT
I_{CC}	MAX	12	27	mA
I_{OH}	MAX	-15	-48	mA
I_{OL}	MAX	24	48	mA

SWITCHING CHARACTERISTICS

PARAMETER	INPUT	OUTPUT	MAX or MIN	ALS	AS
t_{PLH}	A or B	Y	MAX	7	4
t_{PHL}				6	4

UNIT: ns

: OBSOLETED or NOT RECOMMENDED NEW DESIGNS

1005

HEX INVERTING BUFFER GATES WITH OPEN-COLLECTOR OUTPUTS

- Buffer Version of SN74ALS05A

Logic Diagram

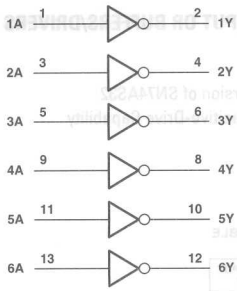

FUNCTION TABLE

INPUT A	OUTPUT Y
H	L
L	H

RECOMMENDED OPERATING CONDITIONS

PARAMETER	MAX or MIN	ALS	UNIT
I_{CC}	MAX	12	mA
V_{OH}	MAX	5.5	V
I_{OL}	MAX	24	mA

SWITCHING CHARACTERISTICS

PARAMETER	INPUT	OUTPUT	MAX or MIN	ALS
t_{PLH}	A	Y	MAX	30
t_{PHL}				10

UNIT: ns

1008

QUADRUPLE 2-INPUT POSITIVE-AND BUFFERS/DRIVERS

- Buffer Version of SN74ALS08
- Driver Version of SN74AS08

Logic Diagram

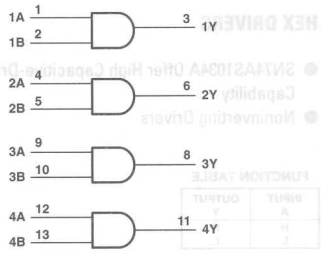

FUNCTION TABLE

INPUTS A	INPUTS B	OUTPUT Y
H	H	H
L	X	L
X	L	L

RECOMMENDED OPERATING CONDITIONS

PARAMETER	MAX or MIN	ALS	AS	UNIT
I_{CC}	MAX	9.3	22	mA
I_{OH}	MAX	-2.6	-48	mA
I_{OL}	MAX	24	48	mA

SWITCHING CHARACTERISTICS

PARAMETER	INPUT	OUTPUT	MAX or MIN	ALS	AS
t_{PLH}	A or B	Y	MAX	9	6
t_{PHL}				9	6

UNIT: ns

PRODUCTION DATA information is current as of publication date. Products conform to specifications per the terms of Texas Instruments standard warranty. Production processing does not necessarily include testing of all parameters. See www.ti.com/sc/logic for the most current data sheets.

1032

QUAD 2-INPUT OR BUFFERS/DRIVERS

Logic Diagram

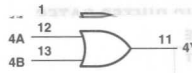

FUNCTION TABLE
(each gate)

INPUTS A	INPUTS B	OUTPUT Y
H	X	H
X	H	H
L	L	L

RECOMMENDED OPERATING CONDITIONS

PARAMETER	MAX or MIN	ALS	AS	UNIT
I_{CC}	MAX	10.6	24	mA
I_{OH}	MAX	-2.6	-48	mA
I_{OL}	MAX	24	48	mA

SWITCHING CHARACTERISTICS

PARAMETER	INPUT	OUTPUT	MAX or MIN	ALS	AS
t_{PLH}	A or B	Y	MAX	9	6.3
t_{PHL}	A or B	Y	MAX	12	6.3

UNIT:ns

1034

HEX DRIVERS

- SN74AS1034A Offer High Capacitive-Drive Capability
- Noninverting Drivers

Logic Diagram

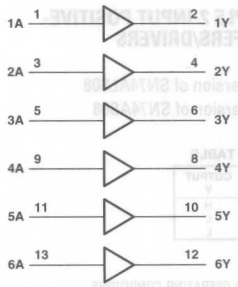

FUNCTION TABLE

INPUT A	OUTPUT Y
H	H
L	L

RECOMMENDED OPERATING CONDITIONS

PARAMETER	MAX or MIN	ALS	AS	UNIT
I_{CC}	MAX	14	35	mA
I_{OH}	MAX	-15	-48	mA
I_{OL}	MAX	24	48	mA

SWITCHING CHARACTERISTICS

PARAMETER	INPUT	OUTPUT	MAX or MIN	ALS	AS
t_{PLH}	A	Y	MAX	8	6
t_{PHL}				8	6

UNIT: ns

: OBSOLETED or NOT RECOMMENDED NEW DESIGNS

1035

HEX BUFFERS WITH OPEN-COLLECTOR OUTPUTS

- Noninverting Buffers with Open-Collector Outputs

Logic Diagram

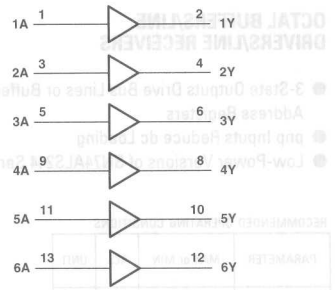

FUNCTION TABLE

INPUT A	OUTPUT Y
H	H
L	L

RECOMMENDED OPERATING CONDITIONS

PARAMETER	MAX or MIN	ALS	UNIT
I_{CC}	MAX	14	mA
V_{OH}	MAX	5.5	V
I_{OL}	MAX	24	mA

SWITCHING CHARACTERISTICS

PARAMETER	INPUT	OUTPUT	MAX or MIN	ALS
t_{PLH}	A	Y	MAX	30
t_{PHL}				12

UNIT: ns

1240

OCTAL BUFFERS/LINE DRIVERS/LINE RECEIVERS

- Low-Power Versions of SN74ALS240A
- 3-State Outputs Drive Bus Lines or Buffer Memory Address Registers
- 3-State Outputs Drive Bus Lines or Buffer Memory Address Registers

Logic Diagram

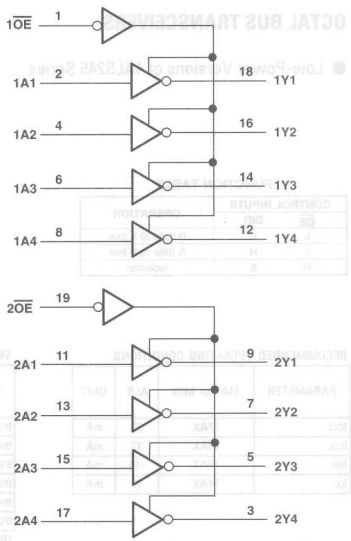

RECOMMENDED OPERATING CONDITIONS

PARAMETER	MAX or MIN	ALS	UNIT
I_{CCZ}	MAX	13	mA
I_{CCL}	MAX	14	mA
I_{OH}	MAX	-15	mA
I_{OL}	MAX	16	mA

SWITCHING CHARACTERISTICS

PARAMETER	INPUT	OUTPUT	MAX or MIN	ALS
t_{PLH}	$\overline{A}$	Y	MAX	13
t_{PHL}				13
t_{PZH}	$\overline{OE}$	Y	MAX	20
t_{PZL}				22
t_{PHZ}	$\overline{OE}$	Y	MAX	10
t_{PLZ}				13

UNIT: ns

PRODUCTION DATA information is current as of publication date. Products conform to specifications per the terms of Texas Instruments standard warranty. Production processing does not necessarily include testing of all parameters. See www.ti.com/sc/logic for the most current data sheets.

1244

OCTAL BUFFERS/LINE DRIVERS/LINE RECEIVERS

- 3-State Outputs Drive Bus Lines or Buffer Memory Address Registers
- pnp Inputs Reduce dc Loading
- Low-Power Versions of SN74ALS244 Series

Logic Diagram

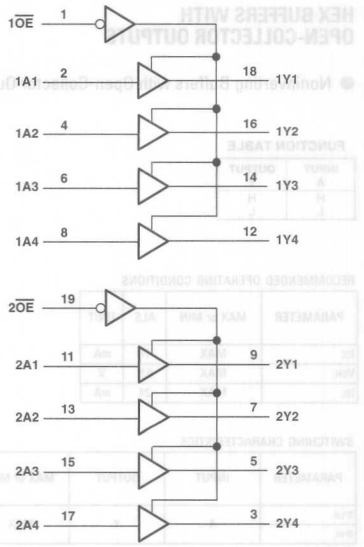

RECOMMENDED OPERATING CONDITIONS

PARAMETER	MAX or MIN	ALS	UNIT
I_{CCZ}	MAX	20	mA
I_{CCL}	MAX	17	mA
I_{OH}	MAX	-15	mA
I_{OL}	MAX	16	mA

SWITCHING CHARACTERISTICS

PARAMETER	INPUT	OUTPUT	MAX or MIN	ALS
t_{PLH}	A	Y	MAX	14
t_{PHL}				14
t_{PZH}	$\overline{OE}$	Y	MAX	22
t_{PZL}				22
t_{PHZ}	$\overline{OE}$	Y	MAX	13
t_{PLZ}				16

UNIT: ns

1245

OCTAL BUS TRANSCEIVERS

- Low-Power Versions of 4ALS245 Series

Logic Diagram

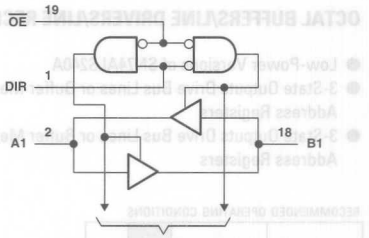

FUNCTION TABLE

CONTROL INPUTS		OPERATION
$\overline{OE}$	DIR	
L	L	B data to A bus
L	H	A data to B bus
H	X	Isolation

RECOMMENDED OPERATING CONDITIONS

PARAMETER	MAX or MIN	ALS	UNIT
I_{CCZ}	MAX	36	mA
I_{CCL}	MAX	33	mA
I_{OH}	MAX	-15	mA
I_{OL}	MAX	16	mA

SWITCHING CHARACTERISTICS

PARAMETER	INPUT	OUTPUT	MAX or MIN	ALS
t_{PLH}	A or B	B or A	MAX	13
t_{PHL}				13
t_{PZH}	$\overline{OE}$	A or B	MAX	25
t_{PZL}				25
t_{PHZ}	$\overline{OE}$	A or B	MAX	12
t_{PLZ}				18

UNIT: ns

: OBSOLETED or NOT RECOMMENDED NEW DESIGNS

1640

OCTAL BUS TRANSCEIVERS

- Lower-Power Versions of SN74ALS640B
- Inverting Logic
- 3-State Outputs

Logic Diagram

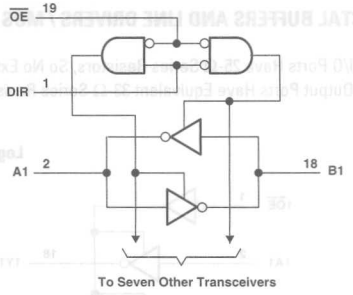

FUNCTION TABLE

CONTROL INPUTS		OPERATION
$\overline{OE}$	DIR	
L	L	$\overline{B}$ data to A bus
L	H	$\overline{A}$ data to B bus
H	X	Isolation

RECOMMENDED OPERATING CONDITIONS

PARAMETER	MAX or MIN	ALS	UNIT
I_{CC}	MAX	32	mA
I_{OH}	MAX	-15	mA
I_{OL}	MAX	16	mA

SWITCHING CHARACTERISTICS

PARAMETER	INPUT	OUTPUT	MAX or MIN	ALS
t_{PLH}	A or B	B or A	MAX	15
t_{PHL}				10
t_{PZH}	$\overline{OE}$	A or B	MAX	20
t_{PZL}				22
t_{PHZ}	$\overline{OE}$	A or B	MAX	10
t_{PLZ}				13

UNIT: ns

1645

OCTAL BUS TRANSCEIVERS

- Lower-Power Versions of SN74ALS645A
- 3-State Outputs

Logic Diagram

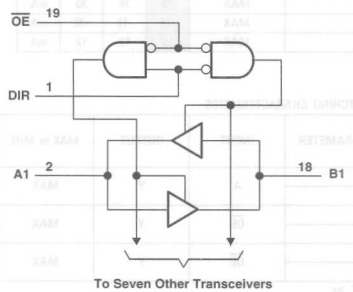

FUNCTION TABLE

CONTROL INPUTS		OPERATION
$\overline{OE}$	DIR	
L	L	B data to A bus
L	H	A data to B bus
H	X	Isolation

RECOMMENDED OPERATING CONDITIONS

PARAMETER	MAX or MIN	ALS	UNIT
I_{CC}	MAX	38	mA
I_{OH}	MAX	-15	mA
I_{OL}	MAX	16	mA

SWITCHING CHARACTERISTICS

PARAMETER	INPUT	OUTPUT	MAX or MIN	ALS
t_{PLH}	A or B	B or A	MAX	13
t_{PHL}				13
t_{PZH}	$\overline{OE}$	A or B	MAX	25
t_{PZL}				25
t_{PHZ}	$\overline{OE}$	A or B	MAX	12
t_{PLZ}				18

UNIT: ns

PRODUCTION DATA information is current as of publication date. Products conform to specifications per the terms of Texas Instruments standard warranty. Production processing does not necessarily include testing of all parameters. See www.ti.com/sc/logic for the most current data sheets.

Logic Diagram

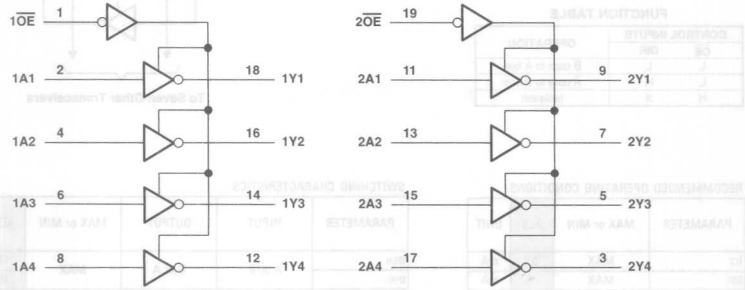

RECOMMENDED OPERATING CONDITIONS

PARAMETER	MAX or MIN	ALS	BCT	ABT	UNIT
I_{CCZ}	MAX	20	8	0.25	mA
I_{CCL}	MAX	23	76	30	mA
I_{OH}	MAX	-15	-12	-32	mA
I_{OL}	MAX	15	12	12	mA

SWITCHING CHARACTERISTICS

PARAMETER	INPUT	OUTPUT	MAX or MIN	ALS	BCT	ABT
t_{PLH}	A	Y	MAX	10	5.7	4.8
t_{PHL}				10	4.4	5.4
t_{PZH}	$\overline{OE}$	Y	MAX	17	9.3	5.2
t_{PZL}				20	12.4	6.8
t_{PHZ}	$\overline{OE}$	Y	MAX	10	8.7	6.4
t_{PLZ}				15	10.6	6.2

UNIT: ns

: OBSOLETED or NOT RECOMMENDED NEW DESIGNS

OCTAL BUFFERS AND LINE DRIVERS / MOS DRIVERS WITH 3-STATE OUTPUTS

- Output Ports Have Equivalent 25-Ω Series Resistors, So No External Resistors Are Required (SN74ABT2241A)
- Output Ports Have Equivalent 33-Ω Series Resistors, So No External Resistors Are Required (SN74BCT2241)

Logic Diagram

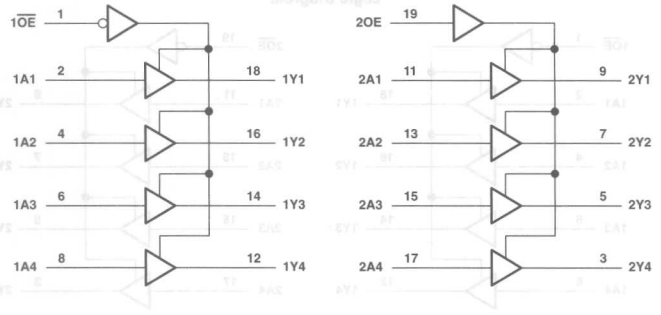

RECOMMENDED OPERATING CONDITIONS

PARAMETER	MAX or MIN	SN74 BCT	ABT	UNIT
I_{CCZ}	MAX	9	0.25	mA
I_{CCL}	MAX	76	30	mA
I_{OH}	MAX	-12	-32	mA
I_{OL}	MAX	12	12	mA

SWITCHING CHARACTERISTICS

PARAMETER	INPUT	OUTPUT	MAX or MIN	SN74 BCT	ABT
t_{PLH}	A	Y	MAX	4.9	4.7
t_{PHL}				6.9	5.6
t_{PZH}	1$\overline{OE}$	Y	MAX	8.9	5.8
t_{PZL}				10.3	8.4
t_{PHZ}	1$\overline{OE}$	Y	MAX	8.7	6.6
t_{PLZ}				11.3	6.4
t_{PZH}	2OE	Y	MAX	8.9	5.8
t_{PZL}				10.3	8.4
t_{PHZ}	2OE	Y	MAX	8.7	6.6
t_{PLZ}				11.3	6.4

UNIT: ns

PRODUCTION DATA information is current as of publication date. Products conform to specifications per the terms of Texas Instruments standard warranty. Production processing does not necessarily include testing of all parameters. See www.ti.com/sc/logic for the most current data sheets.

2244

OCTAL BUFFERS AND LINE DRIVERS / MOS DRIVERS WITH 3-STATE OUTPUTS

- Output Ports Have Equivalent 25-Ω Series Resistors, So No External Resistors Are Required (SN74ABT2244A)
- Output Ports Have Equivalent 33-Ω Series Resistors, So No External Resistors Are Required (SN74BCT2244)
- Output Ports Have Equivalent 26-Ω Series Resistors, So No External Resistors Are Required (SN74LVC2244A)

Logic Diagram

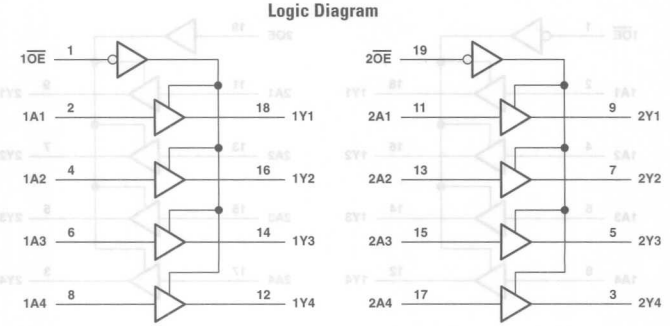

FUNCTION TABLE

INPUTS		OUTPUT
$\overline{OE}$	A	Y
H	X	Z
L	L	L
L	H	H

RECOMMENDED OPERATING CONDITIONS

PARAMETER	MAX or MIN	ALS	SN74 BCT	ABT	LVC 3V	UNIT
I_{CCZ}	MAX	23	10	0.25	0.01	mA
I_{CCL}	MAX	22	77	30	0.01	mA
I_{OH}	MAX	-15	-12	-32	-12	mA
I_{OL}	MAX	15	12	12	12	mA

SWITCHING CHARACTERISTICS

PARAMETER	INPUT	OUTPUT	MAX or MIN	ALS	SN74 BCT	ABT	LVC 3V
t_{PLH}	A	Y	MAX	16	4.9	4.7	5.5
t_{PHL}				17	6.7	5.6	5.5
t_{PZH}	$\overline{OE}$	Y	MAX	17	8.7	5.5	7.1
t_{PZL}				14	10.4	8.3	7.1
t_{PHZ}	$\overline{OE}$	Y	MAX	9	7.8	6.6	6.8
t_{PLZ}				9	9.8	5.8	6.8

UNIT: ns

: OBSOLETED or NOT RECOMMENDED NEW DESIGNS

2245

OCTAL TRANSCEIVER AND LINE/ MOS DRIVERS WITH 3-STATE OUTPUTS

- B Port Has Equivalent 33-Ω Series Resistors, So No External Resistors Are Required (SN74BCT2245)
- B-Port Outputs Have Equivalent 25-Ω Series Resistors, So No External Resistors Are Required (SN74ABT2245)
- Outputs Have Equivalent 25-Ω Series Resistors, So No External Resistors Are Required (SN74ABTR2245)
- All Outputs Have Equivalent 26-Ω Series Resistors, So No External Resistors Are Required (SN74LVCR2245)
- B-Port Outputs Have Equivalent 22-Ω Series Resistors, So No External Resistors Are Required (SN74LVTH2245)

Logic Diagram

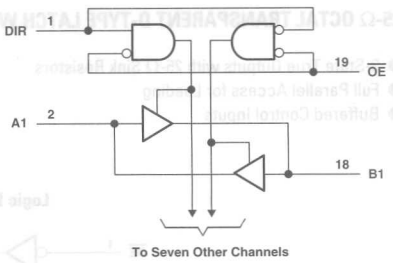

FUNCTION TABLE

INPUTS		OPERATION
$\overline{OE}$	DIR	
L	L	B data to A bus
L	H	A data to B bus
H	X	Isolation

RECOMMENDED OPERATING CONDITIONS

PARAMETER	MAX or MIN	SN74 BCT	ABT	ABTR	LVCR 3V	LVTH 3V	UNIT
I_{CCZ}	MAX	15	0.25	0.25	0.01	0.19	mA
I_{CCL}	MAX	100	32	32	0.01	5	mA
I_{OH} (A port)	MAX	-3	-32	-12	-12	-32	mA
I_{OH} (B port)	MAX	-12	-12	-12	-12	-12	mA
I_{OL} (A port)	MAX	24	64	12	12	64	mA
I_{OL} (B port)	MAX	12	12	12	12	12	mA

SWITCHING CHARACTERISTICS

PARAMETER	INPUT	OUTPUT	MAX or MIN	SN74 BCT	ABT	ABTR	LVCR 3V	LVTH 3V
t_{PLH}	A	B	MAX	5.8	3.8	3.8	6.3	4.4
t_{PHL}				7.8	4.5	4.5	6.3	4.4
t_{PLH}	B	A	MAX	7	3.6	3.8	6.3	3.5
t_{PHL}				7.7	4	4.5	6.3	3.5
t_{PZH}	$\overline{OE}$	B	MAX	9.9	6.1	6.1	8.2	6.2
t_{PZL}				12.2	6.3	6.3	8.2	6.2
t_{PHZ}	$\overline{OE}$	B	MAX	8.2	5.3	5.3	7.8	5.9
t_{PLZ}				9.2	4.8	4.8	7.8	5.4
t_{PZH}	$\overline{OE}$	A	MAX	11.1	5.5	6.1	8.2	5.5
t_{PZL}				11.4	5.7	6.3	8.2	5.5
t_{PHZ}	$\overline{OE}$	A	MAX	9.4	5.6	5.3	7.8	5.9
t_{PLZ}				7.6	4.5	4.8	7.8	5

UNIT: ns

PRODUCTION DATA information is current as of publication date. Products conform to specifications per the terms of Texas Instruments standard warranty. Production processing does not necessarily include testing of all parameters. See www.ti.com/sc/logic for the most current data sheets.

Logic Diagram

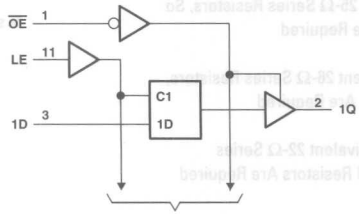

RECOMMENDED OPERATING CONDITIONS

PARAMETER	MAX or MIN	F	UNIT
I_{CC}	MAX	66	mA
I_{OH}	MAX	-3	mA
I_{OL}	MAX	12	mA

SWITCHING CHARACTERISTICS

PARAMETER	INPUT	OUTPUT	MAX or MIN	F
t_w	LE high		MIN	6
t_{su}	Data before LE ↓		MIN	2
t_h	Data after LE ↓		MIN	6
t_{PLH}	D	Q	MAX	9
t_{PHL}				7
t_{PLH}	LE	Q	MAX	13
t_{PHL}				8
t_{PZH}	$\overline{OE}$	Q	MAX	12
t_{PZL}				9.5
t_{PHZ}	$\overline{OE}$	Q	MAX	7.5
t_{PLZ}				6

UNIT:ns

PRODUCTION DATA information is current as of publication date. Products conform to specifications per the terms of Texas Instruments standard warranty. Production processing does not necessarily include testing of all parameters. See www.ti.com/sc/logic for the most current data sheets.

2414

MEMORY DECODER WITH ON-CHIP V_{CC} MONITOR

- Built-In Supply-Voltage Monitor for V_{CC}
- Separate Enable Inputs for Easy Cascading

Logic Diagram

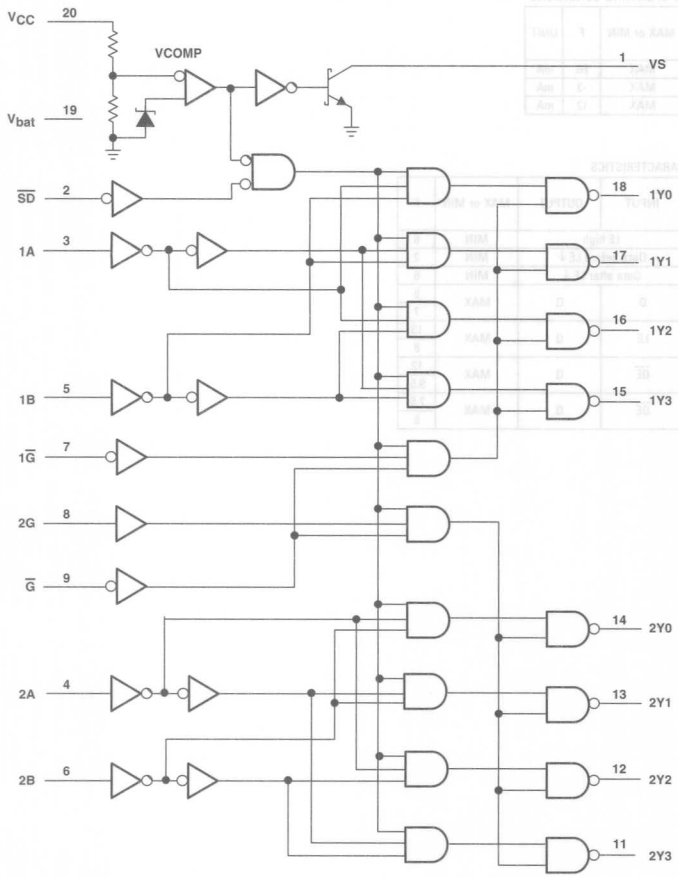

: OBSOLETED or NOT RECOMMENDED NEW DESIGNS

FUNCTION TABLE

INPUTS					OUTPUTS			
CONTROL			SELECT					
$\overline{G}$	1$\overline{G}$	$\overline{SD}$	1B	1A	1Y0	1Y1	1Y2	1Y3
H	X	X	X	X	H	H	H	H
X	H	X	X	X	H	H	H	H
X	X	L	X	X	H	H	H	H
L	L	H	L	L	L	H	H	H
L	L	H	L	H	H	L	H	H
L	L	H	H	L	H	H	L	H
L	L	H	H	H	H	H	H	L

INPUTS					OUTPUTS			
CONTROL			SELECT					
$\overline{G}$	2$\overline{G}$	$\overline{SD}$	2B	2A	2Y0	2Y1	2Y2	2Y3
H	X	X	X	X	H	H	H	H
X	H	X	X	X	H	H	H	H
X	X	L	X	X	H	H	H	H
L	H	H	L	L	L	H	H	H
L	H	H	L	H	H	L	H	H
L	H	H	H	L	H	H	L	H
L	H	H	H	H	H	H	H	L

RECOMMENDED OPERATING CONDITIONS

PARAMETER	MAX or MIN	SN74 BCT	UNIT
I_{CC}	MAX	3	mA
I_{OH}	MAX	-0.4	mA
I_{bat} (Output low)	MAX	3	mA
I_{OL}	MAX	8	mA

SWITCHING CHARACTERISTICS

PARAMETER	INPUT	OUTPUT	MAX or MIN	SN74 BCT
t_{PLH}	A or B	Any Y	MAX	12
t_{PHL}				12
t_{PLH}	Any $\overline{G}$	Any Y	MAX	10
t_{PHL}				11
t_{PLH}	$\overline{SD}$	Any Y	MAX	12
t_{PHL}				12
t_{PLH}	V_{cc}	Any Y	MAX	250
t_{PHL}				250
t_{PLH}	V_{cc}	VS	MAX	250
t_{PHL}				250

UNIT: ns

2541 ...sistors Are Required

RECOMMENDED OPERATING CONDITIONS

PARAMETER	MAX or MIN	ALS	UNIT
I_{CCZ}	MAX	22	mA
I_{CCL}	MAX	25	mA
I_{OH}	MAX	-0.4	mA
I_{OL}	MAX	12	mA

SWITCHING CHARACTERISTICS

PARAMETER	INPUT	OUTPUT	MAX or MIN	ALS
t_{PLH}	A	Y	MAX	15
t_{PHL}				12
t_{PZH}	$\overline{OE}$	Y	MAX	15
t_{PZL}				20
t_{PHZ}	$\overline{OE}$	Y	MAX	10
t_{PLZ}				12

UNIT: ns

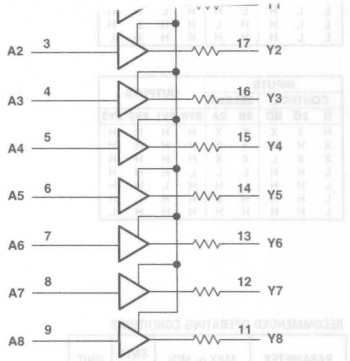

All output resistors are 25 Ω.

2827

10-BIT BUS/MOS MEMORY DRIVERS WITH 3-STATE OUTPUTS

- Output Ports Have Equivalent 25-Ω Series Resistors, So No External Resistors Are Required (SN74ABT2827)
- Output Ports Have Equivalent 25-Ω Resistors; No External Resistors Are Required (SN74BCT2827C)

Logic Diagram

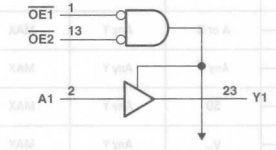

RECOMMENDED OPERATING CONDITIONS

PARAMETER	MAX or MIN	SN74 BCT	ABT	UNIT
I_{CCZ}	MAX	6	0.25	mA
I_{CCL}	MAX	40	40	mA
I_{OH}	MAX	-1	-12	mA
I_{OL}	MAX	12	12	mA

SWITCHING CHARACTERISTICS

PARAMETER	INPUT	OUTPUT	MAX or MIN	SN74 BCT	ABT
t_{PLH}	A	Y	MAX	6	5.5
t_{PHL}				7.8	5.1
t_{PZH}	$\overline{OE}$	Y	MAX	10.7	6.7
t_{PZL}				12.9	7.8
t_{PHZ}	$\overline{OE}$	Y	MAX	13	7.2
t_{PLZ}				10	7.5

UNIT: ns

: OBSOLETED or NOT RECOMMENDED NEW DESIGNS

2828

10-BIT BUS/MOS MEMORY DRIVERS WITH 3-STATE INVERTING OUTPUTS

- Output Ports Have Equivalent 33-Ω Series Resistors, So No External Resistors Are Required (SN74BCT2828)

Logic Diagram

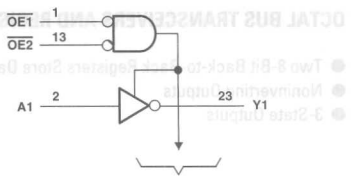

RECOMMENDED OPERATING CONDITIONS

PARAMETER	MAX or MIN	SN74 BCT	UNIT
I_{CCZ}	MAX	6	mA
I_{CCL}	MAX	40	mA
I_{OH}	MAX	-1	mA
I_{OL}	MAX	12	mA

SWITCHING CHARACTERISTICS

PARAMETER	INPUT	OUTPUT	MAX or MIN	SN74 BCT
t_{PLH}	A	Y	MAX	6.6
t_{PHL}				5
t_{PZH}	$\overline{OE}$	Y	MAX	9
t_{PZL}				11.5
t_{PHZ}	$\overline{OE}$	Y	MAX	10.8
t_{PLZ}				8.7

UNIT: ns

PRODUCTION DATA information is current as of publication date. Products conform to specifications per the terms of Texas Instruments standard warranty. Production processing does not necessarily include testing of all parameters. See www.ti.com/sc/logic for the most current data sheets.

2952

OCTAL BUS TRANSCEIVERS AND REGISTERS

- Two 8-Bit Back-to-Back Registers Store Data Flowing in Both Directions
- Noninverting Outputs
- 3-State Outputs

Logic Diagram

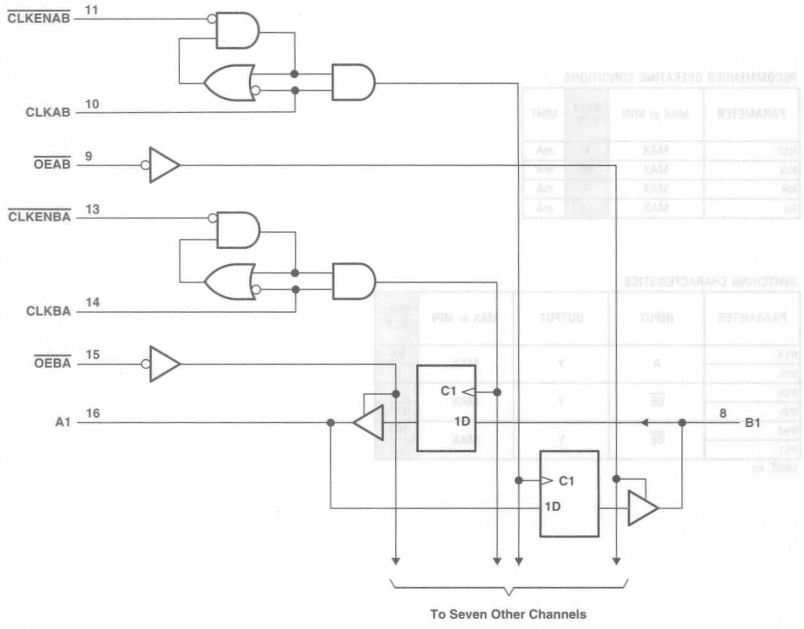

: OBSOLETED or NOT RECOMMENDED NEW DESIGNS

FUNCTION TABLE†

INPUTS				OUTPUT
CLKENAB	CLKAB	$\overline{OEAB}$	A	B
H	X	L	X	B_0
L	↑	L	L	L
L	↑	L	H	H
X	X	H	X	Z

† A-to-B data flow is shown; B-to-A data flow is similar but uses $\overline{CLKENBA}$, CLKBA, and $\overline{OEBA}$.
‡ Level of B before the indicated steady-state input conditions were established

RECOMMENDED OPERATING CONDITIONS

PARAMETER		MAX or MIN	SN74 BCT	ABT	LVC 3V	LVT 3V	UNIT
I_{CC}		MAX	55	35	0.01	5	mA
I_{OH}	A	MAX	-3	-32	-24	-32	mA
	B		-15	-32	-24	-32	mA
I_{OL}	A	MAX	24	64	24	64	mA
	B		64	64	24	64	mA

SWITCHING CHARACTERISTICS

PARAMETER	INPUT	OUTPUT	MAX or MIN	SN74 BCT	ABT	LVC 3V	LVT 3V
f_{max}			MIN	125	150	150	150
t_w	CLK "H"		MIN	4	3.3	3.3	3.3
	CLK "L"			4	3.3	3.3	3.3
t_{su}	A or B High		MIN	2.5	2.5	1.3	1.5
	A or B Low			2.5	2.5	1.3	1.5
	$\overline{CLKENAB}$ or $\overline{CLKENBA}$ High			2	3	1.1	1.5
	$\overline{CLKENAB}$ or $\overline{CLKENBA}$ Low			2	3	1.1	1.9
t_h	A or B		MIN	1.5	1.5	1.1	1
	$\overline{CLKENAB}$ or $\overline{CLKENBA}$			2.5	2	1.1	1.2
t_{PLH}	CLKBA	A,B	MAX	9	5.9	8.2	4.6
t_{PHL}	CLKAB			10.5	6.3	8.2	4.6
t_{PZH}	$\overline{OEBA}$	A,B	MAX	8.2	5.6	7.8	4.6
t_{PZL}	$\overline{OEAB}$			12.9	6.6	7.8	4.6
t_{PHZ}	$\overline{OEBA}$	A,B	MAX	8.4	6.4	7.8	5.4
t_{PLZ}	$\overline{OEAB}$			7	6.2	7.8	5.1

UNIT fmax : MHz other : ns

2953

OCTAL BUS TRANSCEIVERS AND REGISTERS

- Two 8-Bit, Back-to-Back Registers Store Data Flowing in Both Directions
- Inverting Outputs
- 3-State Outputs

Logic Diagram

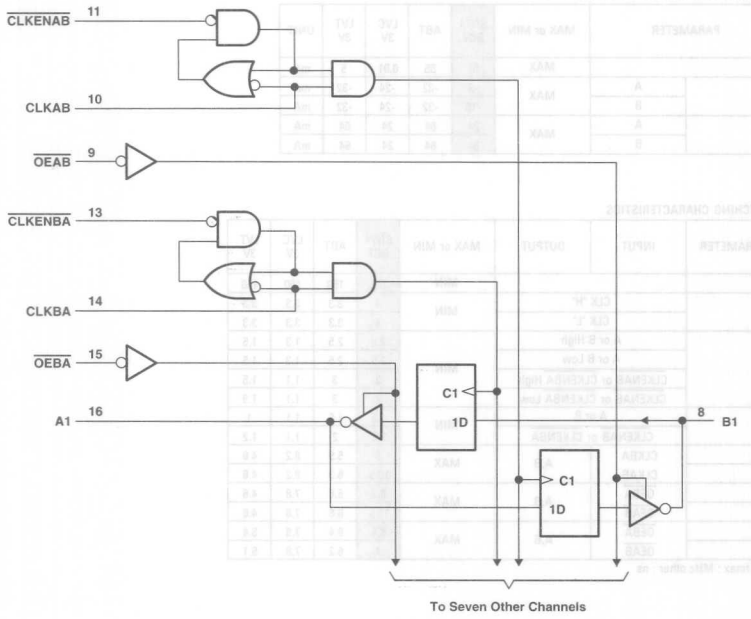

: OBSOLETED or NOT RECOMMENDED NEW DESIGNS

FUNCTION TABLE†

INPUTS				OUTPUT
$\overline{OEAB}$	CLKAB	$\overline{OEAB}$	A	B
H	↑	L	X	A_0
L	↑	L	L	H
L	↑	L	H	L
X	X	H	X	Z

† A-to-B data flow is shown; B-to-A data flow is similar but uses $\overline{CEBA}$, CLKBA, and $\overline{OEBA}$.
‡ Level of B before the indicated steady-state input conditions were established

RECOMMENDED OPERATING CONDITIONS

PARAMETER		MAX or MIN	SN74 BCT	UNIT
I_{CC}		MAX	55	mA
I_{OH}	A	MAX	-3	mA
	B		-15	mA
I_{OL}	A	MAX	24	mA
	B		64	mA

SWITCHING CHARACTERISTICS

PARAMETER	INPUT	OUTPUT	MAX or MIN	SN74 BCT
f_{max}			MIN	110
t_w	CLK "H"		MIN	4.5
	CLK "L"			4.5
t_{su}	A or B High		MIN	2.5
	A or B Low			2.5
	$\overline{CLKENAB}$ or $\overline{CLKENBA}$ High			2
	$\overline{CLKENAB}$ or $\overline{CLKENBA}$ Low			2
t_h	A or B		MIN	1.5
	$\overline{CLKENAB}$ or $\overline{CLKENBA}$			2
t_{PLH}	CLKBA	A,B	MAX	9.5
t_{PHL}	CLKAB			10.2
t_{PZH}	$\overline{OEBA}$	A,B	MAX	8.8
t_{PZL}	$\overline{OEAB}$			14
t_{PHZ}	$\overline{OEBA}$	A,B	MAX	9.1
t_{PLZ}	$\overline{OEAB}$			7.6

UNIT fmax : MHz other : ns

3245

OCTAL BUS TRANSCEIVER WITH ADJUSTABLE OUTPUT VOLTAGE AND 3-STATE OUTPUTS

Logic Diagram

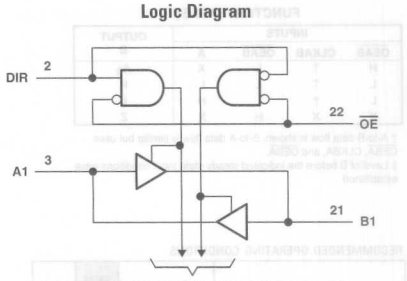

FUNCTION TABLE

INPUTS		OPERATION
$\overline{OE}$	DIR	
L	L	B data to A bus
L	H	A data to B bus
H	X	Isolation

RECOMMENDED OPERATING CONDITIONS

PARAMETER		MAX or MIN	V_{CCA}(V)	V_{CCB}(V)	LVCC	UNIT
I_{CCA}	B to A	MAX	3.6	OPEN	0.05	mA
				3.6	0.05	mA
				5.5	0.05	mA
I_{CCB}	A to B	MAX	3.6	3.6	0.05	mA
				5.5	0.08	mA
I_{OHA}		MAX	2.7	3	-12	mA
			3.3		-24	mA
I_{OHB}		MAX	2.7	3.3	-12	mA
			3.3	3	-24	mA
I_{OLA}		MAX	2.7	3	12	mA
			3.3		24	mA
I_{OLB}		MAX	2.7	3.3	12	mA
			3.3	3	24	mA

SWITCHING CHARACTERISTICS

PARAMETER	INPUT	OUTPUT	MAX or MIN	LVCC V_{CCA} = 2.5V V_{CCB} = 3.3V	LVCC V_{CCA} = 3.6V V_{CCB} = 5V
t_{PLH}	A	B	MAX	9.4	6
t_{PHL}				9.1	5.3
t_{PLH}	B	A	MAX	11.2	5.8
t_{PHL}				9.9	7
t_{PZL}	$\overline{OE}$	$\overline{A}$	MAX	14.5	9.2
t_{PZH}				12.9	9.5
t_{PZL}	$\overline{OE}$	$\overline{B}$	MAX	13	8.1
t_{PZH}				12.8	8.4
t_{PLZ}	$\overline{OE}$	$\overline{A}$	MAX	7.1	7
t_{PHZ}				6.9	7.8
t_{PLZ}	$\overline{OE}$	$\overline{B}$	MAX	8.8	7.3
t_{PHZ}				8.9	7

UNIT: ns

: OBSOLETED or NOT RECOMMENDED NEW DESIGNS

4002

DUAL 4-INPUT POSITIVE-NOR GATES

- $Y = \overline{A + B + C + D}$

Logic Diagram

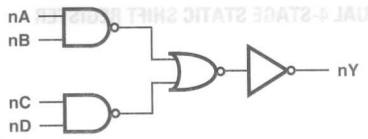

FUNCTION TABLE

INPUTS				OUTPUT
A	B	C	D	Y
L	L	L	L	H
H	X	X	X	L
X	H	X	X	L
X	X	H	X	L
X	X	X	H	L

NOTES:
H = High Voltage Level
L = Low Voltage Level
X = Irrelevant

RECOMMENDED OPERATING CONDITIONS

PARAMETER	MAX or MIN	SN74 HC	CD74 HC	UNIT
I_{CC}	MAX	0.02	0.04	mA
I_{OH}	MAX	-4	-4	mA
I_{OL}	MAX	4	4	mA

SWITCHING CHARACTERISTICS

PARAMETER	INPUT	OUTPUT	MAX or MIN	SN74 HC	CD74 HC
t_{PLH}	A, B, C, D	Y	MAX	28	30
t_{PHL}			MAX	28	30

UNIT:ns

Logic Diagram

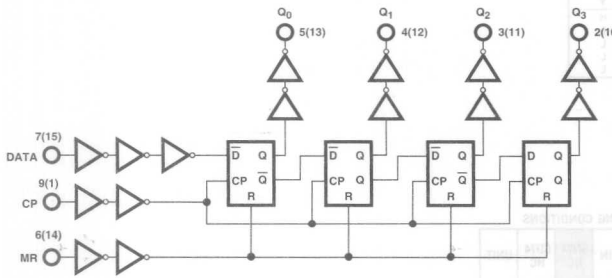

FUNCTION TABLE

INPUTS			OUTPUT			
CP	D	R	Q_0	Q_1	Q_2	Q_3
↑	l	L	L	q'_0	q'_1	q'_2
↑	h	L	H	q'_0	q'_1	q'_2
↓	X	L	q'_0	q'_1	q'_2	q'_3
X	X	H	L	L	L	L

NOTES:
H = High Voltage Level
h = High Voltage Level One Set-up Time Prior to the Low to High Clock Transition
L = Low Voltage Level
l = Low Voltage Level One Set-up Time Prior to the Low to High Clock Transition
X = Don't Care.
↑ = Low to High Clock Transition
↓ = High to Low Clock Transition
q'_n = Lower case letters indicate the state of the referenced output one set-up time prior to the Low to High clock transition.

RECOMMENDED OPERATING CONDITIONS

PARAMETER	MAX or MIN	CD74 HC	UNIT
I_{CC}	MAX	0.16	mA
I_{OH}	MAX	-4	mA
I_{OL}	MAX	4	mA

SWITCHING CHARACTERISTICS

PARAMETER	INPUT	OUTPUT	MAX or MIN	CD74 HC
f_{max}			MIN	45
tW	Clock		MIN	24
	MR			45
t_{SUL}	Data-In to CP		MIN	18
t_{SUH}			MIN	18
t_H	Data-In to CP		MIN	0
t_{PLH}	Clock	Qn	MAX	54
t_{PHL}				54
t_{PLH}	MR	Qn (Clock High)	MAX	83
t_{PHL}				83
t_{PLH}	MR	Qn (Clock Low)	MAX	98
t_{PHL}				98

UNIT : fmax : MHz other : ns

: OBSOLETED or NOT RECOMMENDED NEW DESIGNS

Logic Diagram

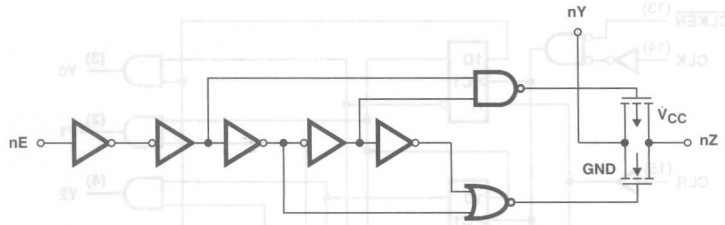

FUNCTION TABLE

INPUT nE	SWITCH
L	OFF
H	ON

NOTES:
H = High Level Voltage
L = Low Level Voltage

RECOMMENDED OPERATING CONDITIONS

PARAMETER	MAX or MIN	CD74 HC	UNIT
I_{CC}	MAX	0.32	mA

SWITCHING CHARACTERISTICS

PARAMETER	INPUT	OUTPUT	MAX or MIN	CD74 HC
t_{PLH}	Switch In	Switch Out	MAX	18
t_{PHL}				18
t_{PZH}	En	Z	MAX	57
t_{PZL}				57
t_{PHZ}	En	Z	MAX	44
t_{PLZ}				44

UNIT:ns

PRODUCTION DATA information is current as of publication date. Products conform to specifications per the terms of Texas Instruments standard warranty. Production processing does not necessarily include testing of all parameters. See www.ti.com/sc/logic for the most current data sheets.

Logic Diagram

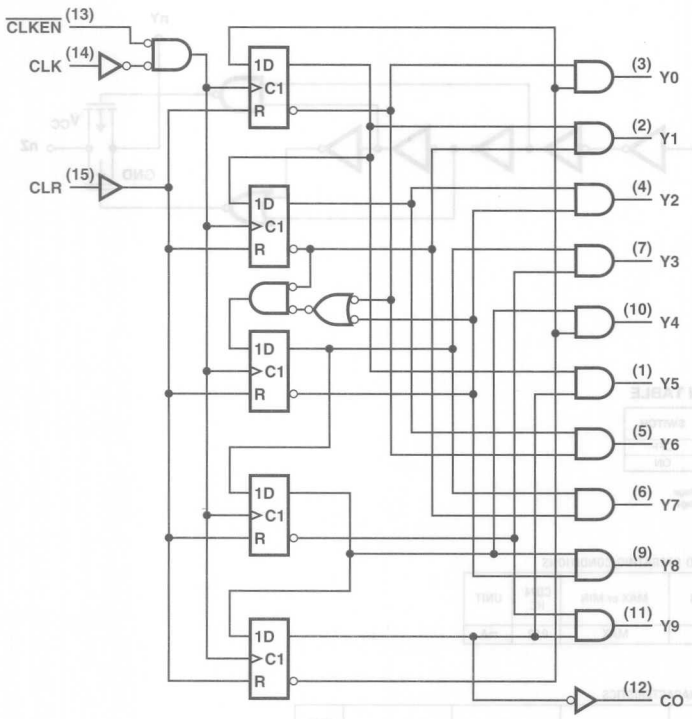

: OBSOLETED or NOT RECOMMENDED NEW DESIGNS

FUNCTION TABLE

INPUTS			OUTPUT STATE†
CLK	$\overline{CLKEN}$	CLR	
L	X	L	No Change
X	H	L	No Change
X	X	H	"0" = H, "1"-"9" = L
↑	L	L	Increments Counter
↓	X	L	No Change
X	↑	L	No Change
H	↓	L	Increments Counter

NOTES:
H = High Level
L = Low Level
↑ = High to Low Transition
↓ = Low to High Transition
X = Don't Care
† If n < 5 TC = H, Otherwise = L

RECOMMENDED OPERATING CONDITIONS

PARAMETER	MAX or MIN	SN74 HC	CD74 HC	UNIT
I_{CC}	MAX	0.08	0.16	mA
I_{OH}	MAX	-4	-4	mA
I_{OL}	MAX	4	4	mA

SWITCHING CHARACTERISTICS

PARAMETER	INPUT	OUTPUT	MAX or MIN	SN74 HC	CD74 HC
f_{max}			MIN	25	20
t_w	CLK (CP)		MIN	20	24
	CLR (MR) H			20	24
t_{su}	$\overline{CLKEN}$ to CLK ($\overline{CE}$ to CP)		MIN	13	22
	CLK Inactive			13	-
t_h	$\overline{CLKEN}$ to CLK ($\overline{CE}$ to CP)		MIN	5	0
t_{PLH}	CLK (CP)	Y, CO (0 to 9, TC)	MAX	58	69
t_{PHL}				58	69
t_{PLH}	$\overline{CLKEN}$ ($\overline{CE}$)	Y, CO (0 to 9, TC)	MAX	63	75
t_{PHL}				63	75
t_{PLH}	CLR (MR)	Y (0 to 9)	MAX	58	69
t_{PHL}				58	69
t_{PLH}	CLR (MR)	CO (TC)	MAX	-	69
t_{PHL}				58	69

UNIT f_{max} : MHz, other : ns

PRODUCTION DATA information is current as of publication date. Products conform to specifications per the terms of Texas Instruments standard warranty. Production processing does not necessarily include testing of all parameters. See www.ti.com/sc/logic for the most current data sheets.

Logic Diagram

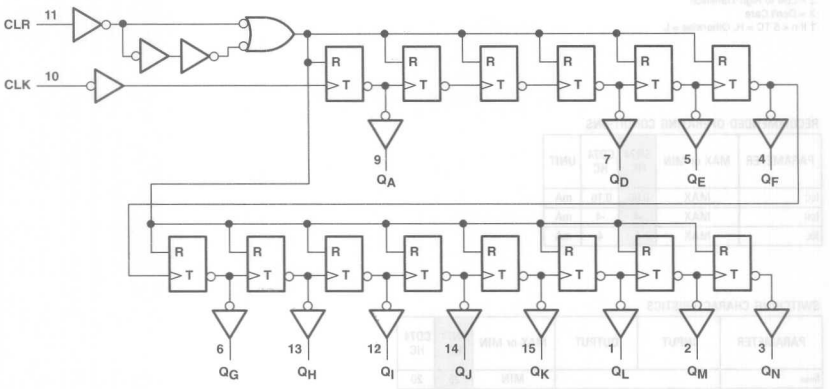

FUNCTION TABLE

CLK	CLR	OUTPUT
↑	L	No Change
↓	L	Advance to Next State
X	H	All Outputs Are Low

NOTE: H = High Voltage Level, L = Low Voltage Level, X = Don't Care, ↑ = Transition from Low to High Level, ↓ = Transition from High to Low.

RECOMMENDED OPERATING CONDITIONS

PARAMETER	MAX or MIN	SN74 HC	CD74 HC	CD74 HCT	UNIT
I_{CC}	MAX	0.08	0.16	0.16	mA
I_{OH}	MAX	-4	-4	-4	mA
I_{OL}	MAX	4	4	4	mA

SWITCHING CHARACTERISTICS

PARAMETER		INPUT	OUTPUT	MAX or MIN	SN74 HC	CD74 HC	CD74 HCT
f_{max}				MIN	22	20	16
t_w	CLK			MIN	23	24	30
	CLR high				18	24	30
t_{su}	CLK	CLR inactive before CLK ↓		MIN	15	-	-
t_{PLH}		CLK	Q_A	MAX	38	42	60
t_{PHL}					38	42	60
t_{PHL}		CLR	Any	MAX	35	51	60

UNIT fmax : MHz other : ns

4024

7-STAGE BINARY COUNTERS

Logic Diagram

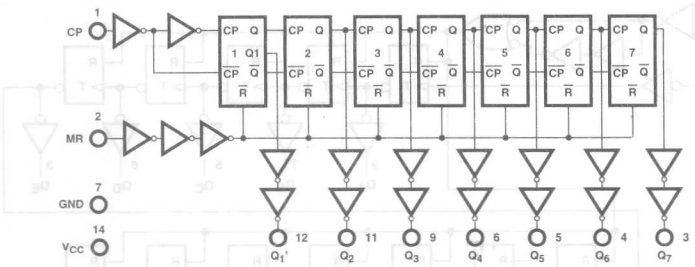

FUNCTION TABLE

CLK	CLR	OUTPUT STATE
↓	L	No Change
↑	L	Advance to Next State
X	H	All outputs Are Low

NOTES:
H = High Voltage Level, L = Low Voltage Level, X = Don't Care, ↑ = Transition form Low to High Level, ↓ = Transition High to Low.

RECOMMENDED OPERATING CONDITIONS

PARAMETER	MAX or MIN	SN74 HC	CD74 HC	CD74 HCT	UNIT
I_{CC}	MAX	0.08	0.16	0.16	mA
I_{OH}	MAX	-4	-4	-4	mA
I_{OL}	MAX	4	4	4	mA

SWITCHING CHARACTERISTICS

PARAMETER	INPUT	OUTPUT	MAX or MIN	SN74 HC	CD74 HC	CD74 HCT
f_{max}			MIN	22	20	16
t_w	CLK (CP)		MIN	23	24	30
	CLR (MR) H			20	24	30
t_{su}	CLR iow before CLK		MIN	20	-	-
t_{PLH}	CLK (CP)	QA (Q1)	MAX	30	42	60
t_{PHL}				30	42	60
t_{PLH}	CLR (MR)	any Q	MAX	-	51	60
t_{PHL}				33	51	60

UNIT f_{max} : MHz, other : ns

PRODUCTION DATA information is current as of publication date. Products conform to specifications per the terms of Texas Instruments standard warranty. Production processing does not necessarily include testing of all parameters. See www.ti.com/sc/logic for the most current data sheets.

4040

12-STAGE BINARY COUNTERS

- Same Pinouts as CMOS4040
- V_{CC}: 2V to 6V

Logic Diagram

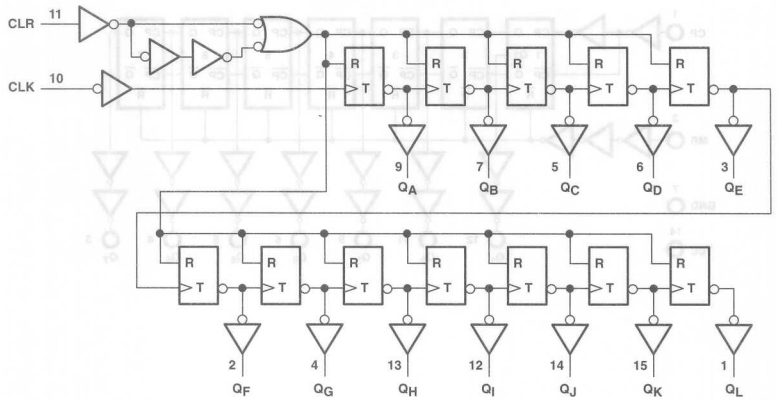

FUNCTION TABLE

CLK	CLR	OUTPUT
↑	L	No Change
↓	L	Advance to Next State
X	H	All Outputs Are Low

NOTE: H = High Voltage Level, L = Low Voltage Level, X = Don't Care, ↑ = Transition from Low to High Level, ↓ = Transition from High to Low.

RECOMMENDED OPERATING CONDITIONS

PARAMETER	MAX or MIN	SN74 HC	CD74 HC	CD74 HCT	LV 3V	LV 5V	UNIT
I_{CC}	MAX	0.08	0.16	0.16	-	0.02	mA
I_{OH}	MAX	-4	-4	-4	-6	-12	mA
I_{OL}	MAX	4	4	4	6	12	mA

SWITCHING CHARACTERISTICS

PARAMETER		INPUT	OUTPUT	MAX or MIN	SN74 HC	CD74 HC	CD74 HCT	LV 3V	LV 5V
f_{max}				MIN	22	20	16	50	80
t_w	CLK			MIN	23	24	30	5	5
	CLR high				18	24	30	5	5
t_{su}	CLK	CLR inactive before CLK ↓		MIN	15	-	-	5	5
t_{PLH}		CLK	Q_A	MAX	38	42	60	17.5	10.5
t_{PHL}					38	42	60	17.5	10.5
t_{PHL}		CLR	Any	MAX	35	51	60	18.5	12

UNIT fmax : MHz other : ns

: OBSOLETED or NOT RECOMMENDED NEW DESIGNS

4046

PHASE-LOCKED-LOOP WITH VCO

Logic Diagram

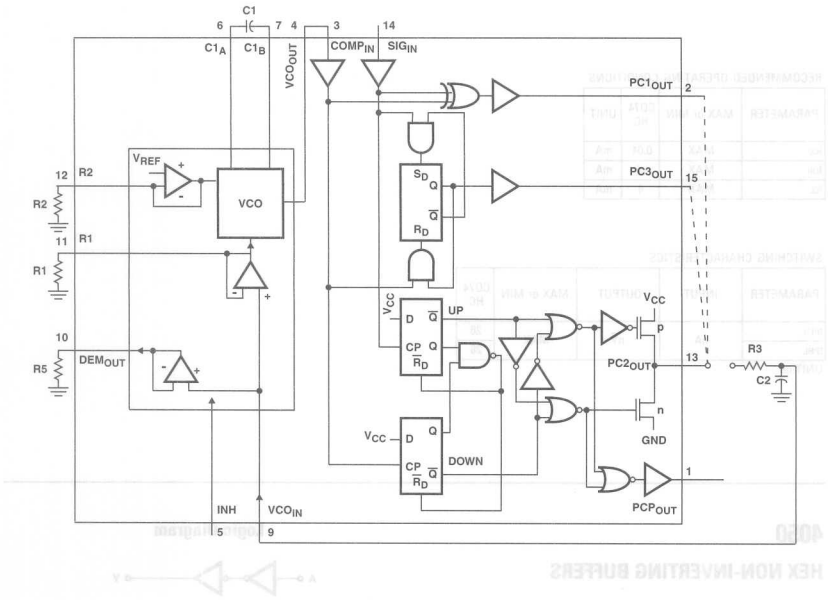

Pin Descriptions

PIN NUMBER	SYMBOL	NAME AND FUNCTION
1	PCP_{OUT}	Phase Comparator Pulse Output
2	$PC1_{OUT}$	Phase Comparator 1 Output
3	$COMP_{IN}$	Comparator Input
4	VCO_{OUT}	VCO Output
5	INH	Inhibit Input
6	$C1_A$	Capacitor C1 Connection A
7	$C1_B$	Capacitor C1 Connection B
8	GND	Ground (0V)
9	VCO_{IN}	VCO Input
10	DEM_{OUT}	Demodulator Output
11	R_1	Resistor R1 Connection
12	R_2	Resistor R2 Connection
13	$PC2_{OUT}$	Phase Comparator 2 Output
14	SIG_{IN}	Signal Input
15	$PC3_{OUT}$	Phase Comparator 3 Output
16	V_{CC}	Positive Supply Voltage

RECOMMENDED OPERATING CONDITIONS

PARAMETER	MAX or MIN	CD74 HC	CD74 HCT	UNIT
I_{CC}	MAX	0.16	0.16	mA
I_{OH}	MAX	-4	-4	mA
I_{OL}	MAX	4	4	mA

SWITCHING CHARACTERISTICS

PARAMETER	INPUT	OUTPUT	MAX or MIN	CD74 HC	CD74 HCT
t_{PLH}	SIG_{IN}	$PC1_{OUT}$	MAX	60	68
t_{PHL}	$COMP_{IN}$			60	68
t_{PLH}	SIG_{IN}	PCP_{OUT}	MAX	90	102
t_{PHL}	$COMP_{IN}$			90	102
t_{PLH}	SIG_{IN}	$PC3_{OUT}$	MAX	74	87
t_{PHL}	$COMP_{IN}$			74	87
t_{TLH}	A	$\overline{Y}$	MAX	22	22
t_{THL}				22	22
t_{PZH}	SIG_{IN}	$PC2_{OUT}$	MAX	80	90
t_{PZL}	$COMP_{IN}$			80	90
t_{PLZ}	SIG_{IN}	$PC2_{OUT}$	MAX	95	102
t_{PHZ}	$COMP_{IN}$			95	102

UNIT:ns

PRODUCTION DATA information is current as of publication date. Products conform to specifications per the terms of Texas Instruments standard warranty. Production processing does not necessarily include testing of all parameters. See www.ti.com/sc/logic for the most current data sheets.

4049

HEX INVERTING BUFFERS

Logic Diagram

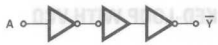

RECOMMENDED OPERATING CONDITIONS

PARAMETER	MAX or MIN	CD74 HC	UNIT
I_{CC}	MAX	0.04	mA
I_{OH}	MAX	-4	mA
I_{OL}	MAX	4	mA

SWITCHING CHARACTERISTICS

PARAMETER	INPUT	OUTPUT	MAX or MIN	CD74 HC
t_{PLH}	nA	$n\overline{Y}$	MAX	26
t_{PHL}				26

UNIT:ns

4050

HEX NON-INVERTING BUFFERS

Logic Diagram

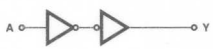

RECOMMENDED OPERATING CONDITIONS

PARAMETER	MAX or MIN	CD74 HC	UNIT
I_{CC}	MAX	0.04	mA
I_{OH}	MAX	-4	mA
I_{OL}	MAX	4	mA

SWITCHING CHARACTERISTICS

PARAMETER	INPUT	OUTPUT	MAX or MIN	CD74 HC
t_{PLH}	nA	nY	MAX	26
t_{PHL}				26

UNIT:ns

: OBSOLETED or NOT RECOMMENDED NEW DESIGNS

Logic Diagram

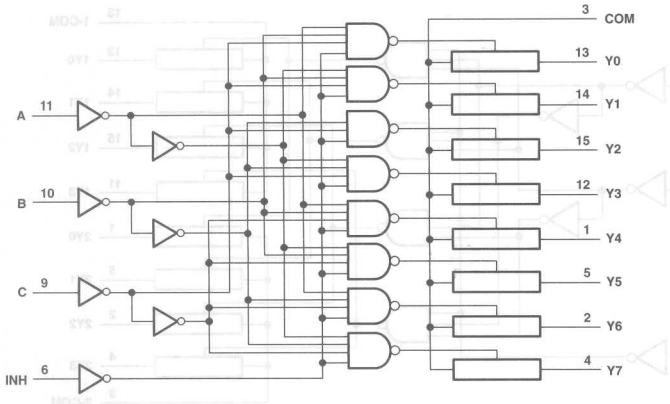

FUNCTION TABLE

INPUTS				ON
INH	C	B	A	CHANNEL
L	L	L	L	Y0
L	L	L	H	Y1
L	L	H	L	Y2
L	L	H	H	Y3
L	H	L	L	Y4
L	H	L	H	Y5
L	H	H	L	Y6
L	H	H	H	Y7
H	X	X	X	None

RECOMMENDED OPERATING CONDITIONS

PARAMETER	MAX or MIN	CD74 HC	CD74 HCT	LV 3V	LV 5V	UNIT
I_{CC}	MAX	0.16	0.16	-	0.02	mA

SWITCHING CHARACTERISTICS

PARAMETER	INPUT	OUTPUT	MAX or MIN	CD74 HC	CD74 HCT	LV 3V	LV 5V
t_{PLH}	COM or Yn	Yn or COM	MAX	18	18	12	8
t_{PHL}				18	18	12	8
t_{PZH}	INH	COM or Yn	MAX	68	83	25	18
t_{PZL}				68	83	25	18
t_{PHZ}	INH	COM or Yn	MAX	68	68	25	18
t_{PLZ}				68	68	25	18

UNIT: ns

PRODUCTION DATA information is current as of publication date. Products conform to specifications per the terms of Texas Instruments standard warranty. Production processing does not necessarily include testing of all parameters. See www.ti.com/sc/logic for the most current data sheets.

DUAL 4-CHANNEL ANALOG MULTIPLEXERS / DEMULTIPLEXERS

Logic Diagram

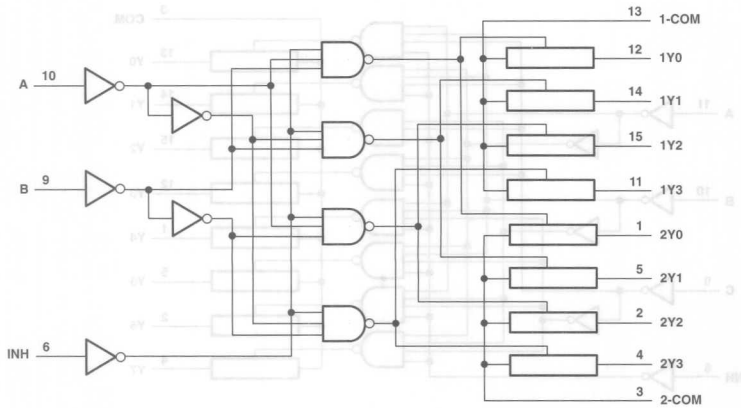

FUNCTION TABLE

INPUTS			ON CHANNEL
INH	B	A	
L	L	L	1Y0, 2Y0
L	L	H	1Y1, 2Y1
L	H	L	1Y2, 2Y2
L	H	H	1Y3, 2Y3
H	X	X	None

RECOMMENDED OPERATING CONDITIONS

PARAMETER	MAX or MIN	CD74 HC	CD74 HCT	LV 3V	LV 5V	UNIT
I_{CC}	MAX	0.16	0.16	-	0.02	mA

SWITCHING CHARACTERISTICS

PARAMETER	INPUT	OUTPUT	MAX or MIN	CD74 HC	CD74 HCT	LV 3V	LV 5V
t_{PLH}	COM or Yn	Yn or COM	MAX	18	18	12	8
t_{PHL}				18	18	12	8
t_{PZH}	INH	COM or Yn	MAX	98	105	25	18
t_{PZL}				98	105	25	18
t_{PHZ}	INH	COM or Yn	MAX	75	75	25	18
t_{PLZ}				75	75	25	18

: OBSOLETED or NOT RECOMMENDED NEW DESIGNS

4053

TRIPLE 2-CHANNEL ANALOG MULTIPLEXERS/DEMULTIPLEXERS

Logic Diagram

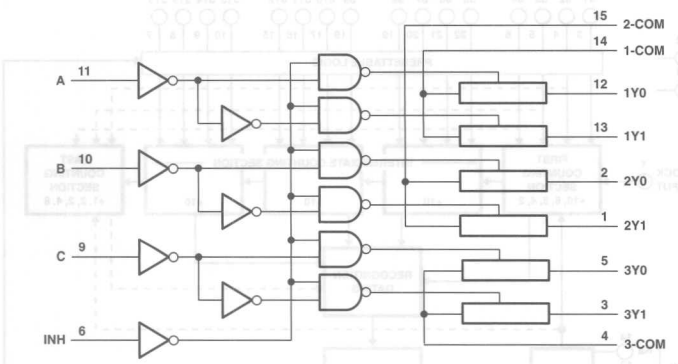

FUNCTION TABLE

INPUTS				ON CHANNEL
INH	C	B	A	
L	L	L	L	1Y0, 2Y0, 3Y0
L	L	L	H	1Y1, 2Y0, 3Y0
L	L	H	L	1Y0, 2Y1, 3Y0
L	L	H	H	1Y1, 2Y1, 3Y0
L	H	L	L	1Y0, 2Y0, 3Y1
L	H	L	H	1Y1, 2Y0, 3Y1
L	H	H	L	1Y0, 2Y1, 3Y1
L	H	H	H	1Y1, 2Y1, 3Y1
H	X	X	X	None

RECOMMENDED OPERATING CONDITIONS

PARAMETER	MAX or MIN	CD74 HC	CD74 HCT	LV 3V	LV 5V	UNIT
Icc	MAX	0.16	0.16	-	0.02	mA

SWITCHING CHARACTERISTICS

PARAMETER	INPUT	OUTPUT	MAX or MIN	CD74 HC	CD74 HCT	LV 3V	LV 5V
tPLH	COM or Yn	Yn or COM	MAX	18	18	12	8
tPHL				18	18	12	8
tPZH	INH	COM or Yn	MAX	66	72	25	18
tPZL				66	72	25	18
tPHZ	INH	COM or Yn	MAX	63	66	25	18
tPLZ				63	66	25	18

UNIT: ns

PRODUCTION DATA information is current as of publication date. Products conform to specifications per the terms of Texas Instruments standard warranty. Production processing does not necessarily include testing of all parameters. See www.ti.com/sc/logic for the most current data sheets.

Function Diagram

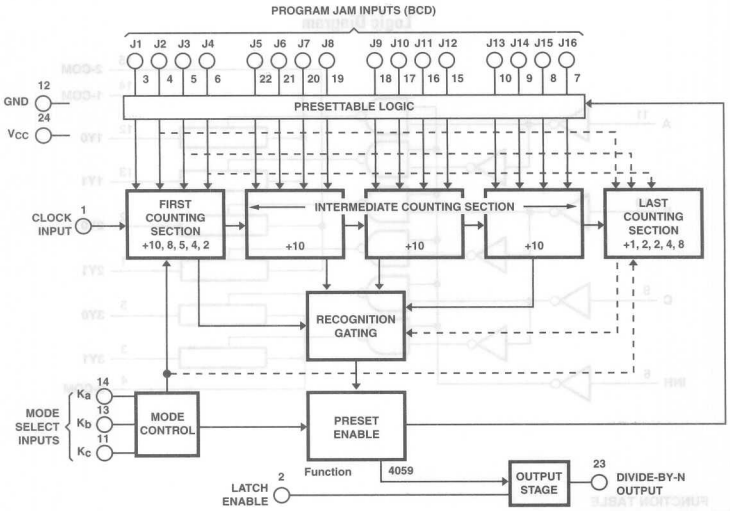

FUNCTION TABLE

MODE SELECT INPUT		
Ka	Kb	Kc
H	H	H
L	H	H
H	L	H
L	L	H
H	H	L
X	L	L

RECOMMENDED OPERATING CONDITIONS

PARAMETER	MAX or MIN	CD74 HC	UNIT
I_{CC}	MAX	0.16	mA
I_{OH}	MAX	-4	mA
I_{OL}	MAX	4	mA

SWITCHING CHARACTERISTICS

PARAMETER	INPUT	OUTPUT	MAX or MIN	CD74 HC
f_{max}	CP		MIN	18
t_w	CP		MIN	27
t_{su}	Kb, Kc to CP		MIN	22
t_{PLH}	CP	Q	MAX	60
t_{PHL}				60
t_{PLH}	LE	Q	MAX	53
t_{PHL}				53

UNIT fmax : MHz other : ns

: OBSOLETED or NOT RECOMMENDED NEW DESIGNS

- V_{CC}: 2V to 6V

Logic Diagram

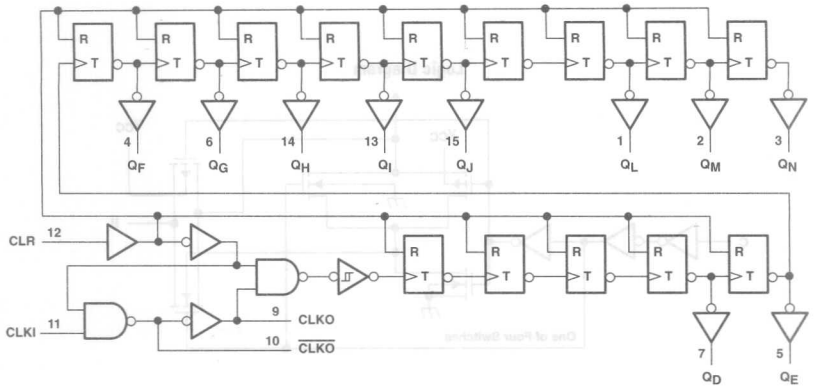

FUNCTION TABLE

INPUTS		OUTPUTS		
CLKI	CLR	Q_D to Q_N	CLKO	$\overline{CLKO}$
↑	L	No Change	↑	↓
↓	L	Advance to Next State	↓	↑
X	H	All Outputs are Low	L	H

OPERATING CONDITIONS

MAX or MIN	SN74 HC	CD74 HC	CD74 HCT	UNIT
MAX	0.08	0.16	0.16	mA
– MAX	-4	-4	-4	mA
MAX	4	4	4	mA

SWITCHING CHARACTERISTICS

PARAMETER	INPUT	OUTPUT	MAX or MIN	SN74 HC	CD74 HC	CD74 HCT
f_{max}			MIN	22	20	20
t_w	CLKI		MIN	23	24	24
	CLR high			*23*	*24*	*38*
t_{su}	CLR inactive before CLK ↓		MIN	40	-	-
t_{PLH}	CLKI	Q_D	MAX	123	90	100
t_{PHL}				123	90	100
t_{PHL}	CLR	Any	MAX	35	53	66

UNIT fmax : MHz other : ns

PRODUCTION DATA information is current as of publication date. Products conform to specifications per the terms of Texas Instruments standard warranty. Production processing does not necessarily include testing of all parameters. See www.ti.com/sc/logic for the most current data sheets.

4066

QUADRUPLE BILATERAL SWITCHES

- Same Pinouts as CMOS4016, 4066
- Low On-State Impedance: 50-Ω TYP at V_{CC} = 6V
- Individual Switch Controls
- Extremely Low Input Current
- High On-Off Output Voltage Ratio
- Low Crosstalk Between Switches

Logic Diagram

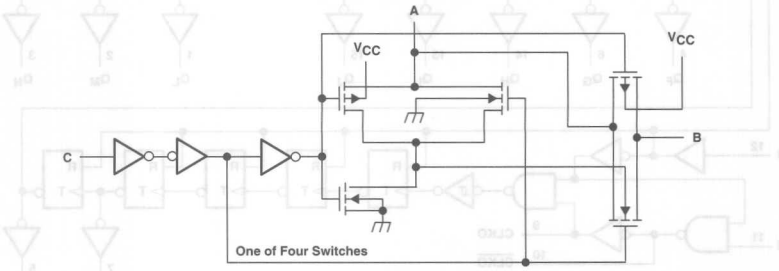

FUNCTION TABLE

INPUT (C)	SWITCH
L	OFF
H	ON

NOTE:
H = High Level
L = Low Level

RECOMMENDED OPERATING CONDITIONS

PARAMETER	MAX or MIN	SN74 HC	CD74 HC	CD74 HCT	LV 3V	LV 5V	UNIT
I_{CC}	MAX	0.02	0.04	0.04	-	0.02	mA

SWITCHING CHARACTERISTICS

PARAMETER	INPUT	OUTPUT	MAX or MIN	SN74 HC	CD74 HC	CD74 HCT	LV 3V	LV 5V
t_{PLH}	A or B	B or A	MAX	15	18	18	12	8
t_{PHL}				15	18	18	12	8
t_{PZH}	C	A or B	MAX	45	30	36	22	16
t_{PZL}				45	30	36	22	16
t_{PHZ}	C	A or B	MAX	50	45	53	22	16
t_{PLZ}				50	45	53	22	16

UNIT: ns

: OBSOLETED or NOT RECOMMENDED NEW DESIGNS

4067

16-CHANNEL ANALOG MULTIPLEXER/DEMULTIPLEXER

Function Diagram

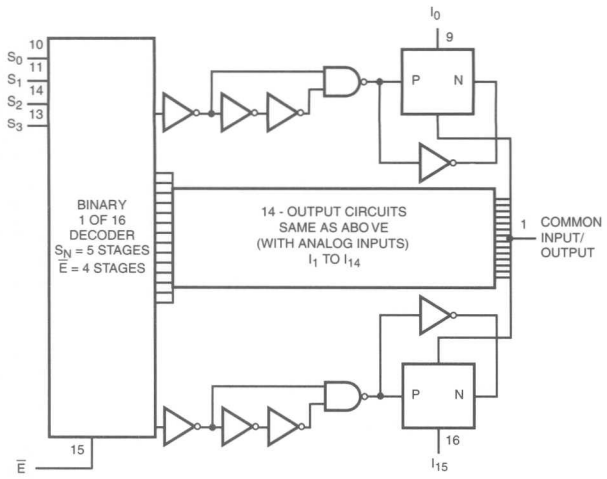

FUNCTION TABLE

S0	S1	S2	S3	$\overline{E}$	SELECTED CHANNEL
X	X	X	X	X	None
0	0	0	0	0	0
1	0	0	0	0	1
0	1	0	0	0	2
1	1	0	0	0	3
0	0	1	0	0	4
1	0	1	0	0	5
0	1	1	0	0	6
1	1	1	0	0	7
0	0	0	1	0	8
1	0	0	1	0	9
0	1	0	1	0	10
1	1	0	1	0	11
0	0	1	1	0	12
1	0	1	1	0	13
0	1	1	1	0	14
1	1	1	1	0	15

NOTES:
H = High Level
L = Low Level

RECOMMENDED OPERATING CONDITIONS

PARAMETER	MAX or MIN	CD74 HC	CD74 HCT	UNIT
I_{CC}	MAX	0.16	0.16	mA

SWITCHING CHARACTERISTICS

PARAMETER	INPUT	OUTPUT	MAX or MIN	CD74 HC	CD74 HCT
t_{PLH}	Switch In	COMON I/O	MAX	22	22
t_{PHL}				22	22
t_{PZH}	$\overline{E}$	COMON I/O	MAX	83	90
t_{PZL}				83	90
t_{PZH}	Sn	COMON I/O	MAX	90	90
t_{PZL}				90	90
t_{PHZ}	$\overline{E}$	COMON I/O	MAX	83	83
t_{PLZ}				83	83
t_{PHZ}	Sn	COMON I/O	MAX	87	87
t_{PLZ}				87	87

UNIT:ns

PRODUCTION DATA information is current as of publication date. Products conform to specifications per the terms of Texas Instruments standard warranty. Production processing does not necessarily include testing of all parameters. See www.ti.com/sc/logic for the most current data sheets.

4075

TRIPLE 3-INPUT OR GATES

- Y = A + B + C

Logic Diagram

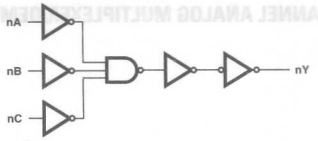

: OBSOLETED or NOT RECOMMENDED NEW DESIGNS

FUNCTION TABLE

INPUTS			OUTPUT
A	B	C	Y
L	L	L	L
H	X	X	H
X	H	X	H
X	X	H	H

NOTES:
H = High Voltage Level
L = Low Voltage Level
X = Don't Care

RECOMMENDED OPERATING CONDITIONS

PARAMETER	MAX or MIN	SN74 HC	CD74 HC	CD74 HCT	UNIT
I_{CC}	MAX	0.02	0.04	0.04	mA
I_{OH}	MAX	-4	-4	-4	mA
I_{OL}	MAX	4	4	4	mA

SWITCHING CHARACTERISTICS

PARAMETER	INPUT	OUTPUT	MAX or MIN	SN74 HC	CD74 HC	CD74 HCT
t_{PLH}	A, B or C	Y	MAX	25	30	36
t_{PHL}	A, B or C	Y	MAX	25	30	36

UNIT:ns

4094

8-STAGE SHIFT AND STORE BUS REGISTER, THREE-STATE

Logic Diagram

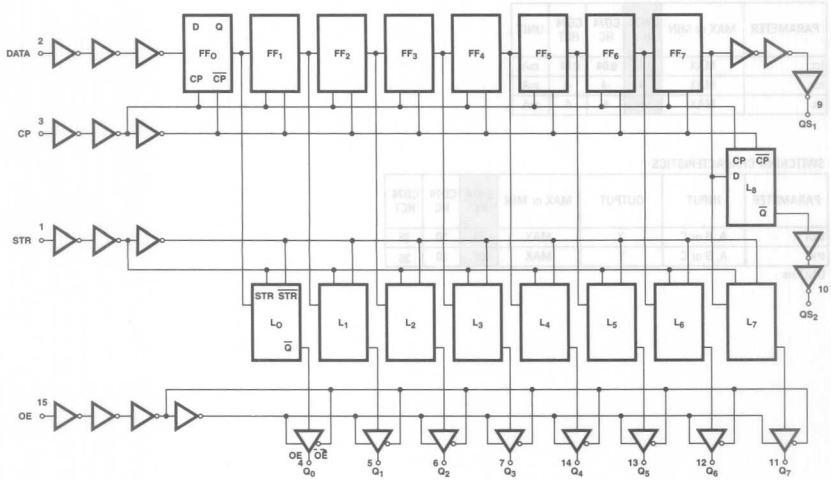

: OBSOLETED or NOT RECOMMENDED NEW DESIGNS

FUNCTION TABLE

INPUTS				PALALLEL OUTPUT		SERIAL OUTPUT	
CP	OE	STR	D	Q_0	Q_n	QS_1‡	QS_2
↑	L	X	X	Z	Z	Q'_6	NC
↓	L	X	X	Z	Z	NC	Q'_7
↑	H	L	X	NC	NC	Q'_6	NC
↑	H	H	L	L	Q_n-1	Q'_6	NC
↑	H	H	H	H	Q_n-1	Q'_6	NC
↓	H	H	H	NC	NC	NC	Q'_7

NOTES:

†. H = High Voltage Level, L = Low Voltage Level, X = Don't Care, NC = No charge, Z = High Impedance Off-state, ↑ = Transition from Low to High Level, ↓ = Transition from High Low.

‡. At the positive clock edge the information in the seventh resister stage is transferred to the 8th register stage and QS_1 output.

RECOMMENDED OPERATING CONDITIONS

PARAMETER	MAX or MIN	CD74 HC	CD74 HCT	UNIT
I_{CC}	MAX	0.16	0.16	mA
I_{OL}	MAX	4	4	mA
I_{OH}	MAX	-4	-4	mA

SWITCHING CHARACTERISTICS

PARAMETER	INPUT	OUTPUT	MAX or MIN	CD74 HC	CD74 HCT
t_W	CP		MIN	24	24
t_{WH}	STR		MIN	24	24
t_{SU}	Data		MIN	15	15
	STR			30	30
t_H	Data		MIN	3	4
	STR			0	0
t_{PLH}	CP	QS1	MAX	45	-
t_{PHL}				45	-
t_{PLH}	CP	QS2	MAX	41	-
t_{PHL}				41	-
t_{PLH}	CP	Qn	MAX	59	-
t_{PHL}				59	-
t_{PLH}	STR	Qn	MAX	54	-
t_{PHL}				54	-
t_{PZH}	OE	Qn	MAX	53	-
t_{PZL}				53	-
t_{PLZ}	OE	Qn	MAX	38	-
t_{PHZ}				38	-

UNIT:ns

Logic Diagram

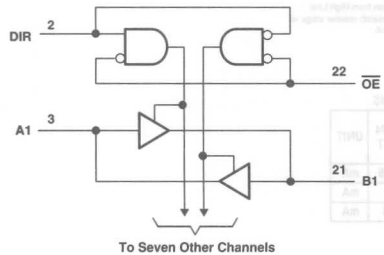

FUNCTION TABLE

INPUTS		OPERATION
$\overline{OE}$	DIR	
L	L	B data to A bus
L	H	A data to B bus
H	X	Isolation

RECOMMENDED OPERATING CONDITIONS

PARAMETER	MAX or MIN	LVC	LVCC	UNIT
I_{CCA}	MAX	0.08	0.08	mA
I_{CCB}	MAX	0.05	0.08	mA
I_{OH}	MAX	-24	-24	mA
I_{OL}	MAX	24	24	mA

SWITCHING CHARACTERISTICS

PARAMETER	INPUT	OUTPUT	MAX or MIN	LVC	LVCC V_{CCB} 3.3V
t_{PLH}	A	B	MAX	6.3	7
t_{PHL}				6.7	7
t_{PLH}	B	A	MAX	6.1	6.2
t_{PHL}				5	5.3
t_{PZL}	$\overline{OE}$	A	MAX	9	9
t_{PZH}				8.1	8
t_{PZL}	$\overline{OE}$	B	MAX	8.8	10
t_{PZH}				9.8	10.2
t_{PLZ}	$\overline{OE}$	A	MAX	7	5.2
t_{PHZ}				5.8	5.2
t_{PLZ}	$\overline{OE}$	B	MAX	7.7	5.4
t_{PHZ}				7.8	7.4

UNIT: ns

Logic Diagram

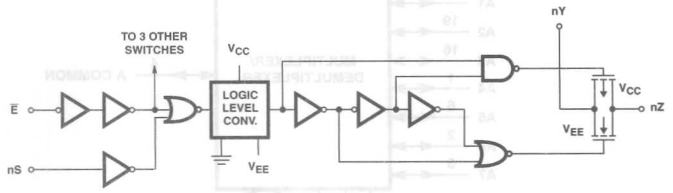

FUNCTION TABLE

INPUTS		
$\overline{E}$	S	SWITCH
L	L	OFF
L	H	ON
H	X	OFF

RECOMMENDED OPERATING CONDITIONS

PARAMETER	MAX or MIN	CD74 HC	CD74 HCT	UNIT
I_{CC}	MAX	0.16	0.16	mA

SWITCHING CHARACTERISTICS

PARAMETER	INPUT	OUTPUT	MAX or MIN	CD74 HC	CD74 HCT
t_{PLH}	Switch in	Switch out	MAX	18	18
t_{PHL}				18	18
t_{PZH}	$\overline{E}$	Z	MAX	62	66
t_{PZL}				62	85
t_{PZH}	nS	Z	MAX	53	60
t_{PZL}				53	75
t_{PLZ}	$\overline{E}$	Z	MAX	62	75
t_{PHZ}				62	-
t_{PLZ}	nS	Z	MAX	53	-
t_{PHZ}				53	66

UNIT:ns

PRODUCTION DATA information is current as of publication date. Products conform to specifications per the terms of Texas Instruments standard warranty. Production processing does not necessarily include testing of all parameters. See www.ti.com/sc/logic for the most current data sheets.

ANALOG MULTIPLEXERS/DEMULTIPLEXERS WITH LATCH

Logic Diagram

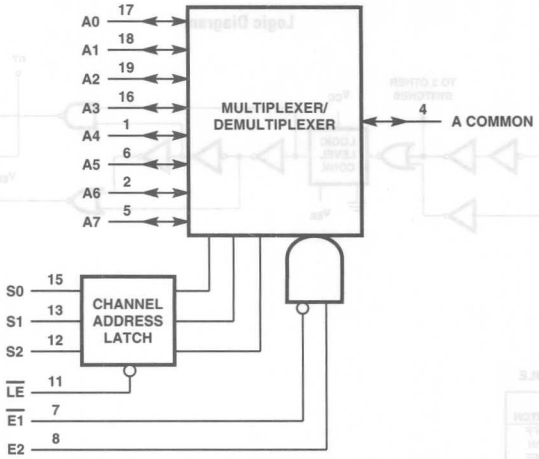

FUNCTION TABLE

INPUTS					"ON"† SWITCCHES
$\overline{E1}$	E2	S2	S1	S0	$\overline{LE}$ = H
L	H	L	L	L	A_0
L	H	L	L	H	A_1
L	H	L	H	L	A_2
L	H	L	H	H	A_3
L	H	H	L	L	A_4
L	H	H	L	H	A_5
L	H	H	H	L	A_6
L	H	H	H	H	A_7
H	L	X	X	X	None

NOTES:
† When LE is low S0-S2 data are latched and switches cannot change state.
H = High Voltage Level, L = Low Voltage Level, X = Don't Care

RECOMMENDED OPERATING CONDITIONS

PARAMETER	MAX or MIN	CD74 HC	CD74 HCT	UNIT
Icc	MAX	0.16	0.16	mA

SWITCHING CHARACTERISTICS

PARAMETER	INPUT	OUTPUT	MAX or MIN	CD74 HC	CD74 HCT
tw	$\overline{LE}$		MIN	30	28
tsu	Sn to $\overline{LE}$		MIN	-	-
th	Sn to $\overline{LE}$		MIN	5	5
tPLH	Switch In	Switch Out	MAX	11	11
tPHL				11	11
tPZH	$\overline{E1}$, E2, $\overline{LE}$	Vos	MAX	90	113
tPZL				90	113
tPZH	Sn	Vos	MAX	90	113
tPZL				90	113
tPLZ	$\overline{E1}$	Vos	MAX	75	83
tPHZ				75	83
tPLZ	E2	Vos	MAX	75	90
tPHZ				75	90
tPLZ	$\overline{LE}$	Vos	MAX	83	90
tPHZ				83	90
tPLH	Sn	Vos	MAX	83	98
tPHL				83	98

UNIT:ns

ANALOG MULTIPLEXERS/DEMULTIPLEXERS WITH LATCH

Function Diagram

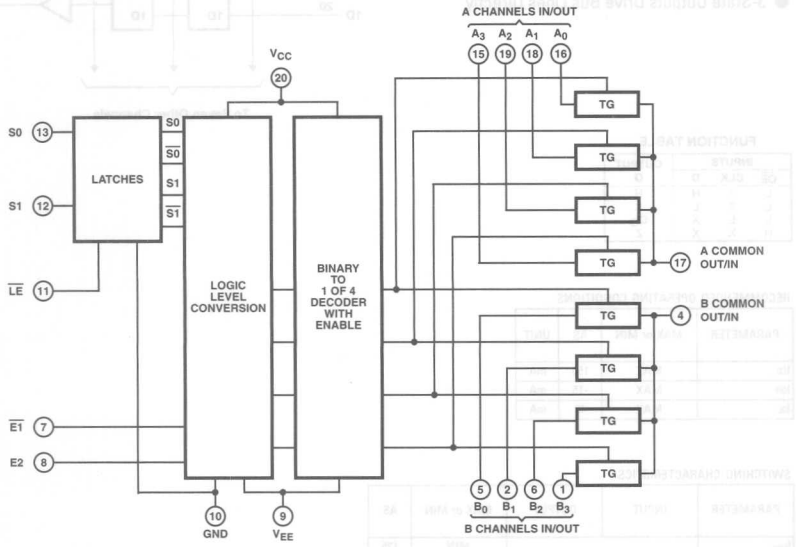

FUNCTION TABLE

INPUTS				"ON"† SWITCCHES
$\overline{E1}$	E2	S1	S0	$\overline{LE}$ = H
L	H	L	L	A_0, B_0
L	H	L	H	A_1, B_1
L	H	H	L	A_2, B_2
L	H	H	H	A_3, B_3
H	L	X	X	None

NOTES:
† When LE is low S0-S2 data are latched and switches cannot change state.
H = High Voltage Level, L = Low Voltage Level, X = Don't Care

RECOMMENDED OPERATING CONDITIONS

PARAMETER	MAX or MIN	CD74 HC	UNIT
I_{CC}	MAX	0.16	mA

SWITCHING CHARACTERISTICS

PARAMETER	INPUT	OUTPUT	MAX or MIN	CD74 HC
t_W	$\overline{LE}$		MIN	30
t_{su}	Sn to $\overline{LE}$		MIN	-
t_H	Sn to $\overline{LE}$		MIN	5
t_{PLH}	Switch In	Switch Out	MAX	11
t_{PHL}				11
t_{PZH}	$\overline{E1}$, E2, $\overline{LE}$	Vos	MAX	105
t_{PZL}				105
t_{PZH}	Sn	Vos	MAX	113
t_{PZL}				113
t_{PLZ}	$\overline{E1}$, E2, $\overline{LE}$	Vos	MAX	83
t_{PHZ}				83

UNIT:ns

PRODUCTION DATA information is current as of publication date. Products conform to specifications per the terms of Texas Instruments standard warranty. Production processing does not necessarily include testing of all parameters. See www.ti.com/sc/logic for the most current data sheets.

4374

Logic Diagram

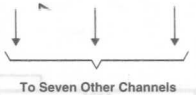

FUNCTION TABLE

INPUTS			OUTPUT
$\overline{OE}$	CLK	D	Q
L	↑	H	H
L	↑	L	L
L	L	X	Q_O
H	X	X	Z

RECOMMENDED OPERATING CONDITIONS

PARAMETER	MAX or MIN	AS	UNIT
I_{CC}	MAX	150	mA
I_{OH}	MAX	-15	mA
I_{OL}	MAX	48	mA

SWITCHING CHARACTERISTICS

PARAMETER	INPUT	OUTPUT	MAX or MIN	AS
f_{max}			MIN	125
t_w			MIN	4
t_{su}			MIN	4
t_h			MIN	1
t_{PLH}	CLK	Q	MAX	8
t_{PHL}				8
t_{PZH}	$\overline{OE}$	Q	MAX	6
t_{PZL}				8
t_{PHZ}	$\overline{OE}$	Q	MAX	6.5
t_{PLZ}				7

UNIT fmax : MHz other : ns

: OBSOLETED or NOT RECOMMENDED NEW DESIGNS

4511

BCD-TO-7 SEGMENT LATCH/DECODER/DRIVERS

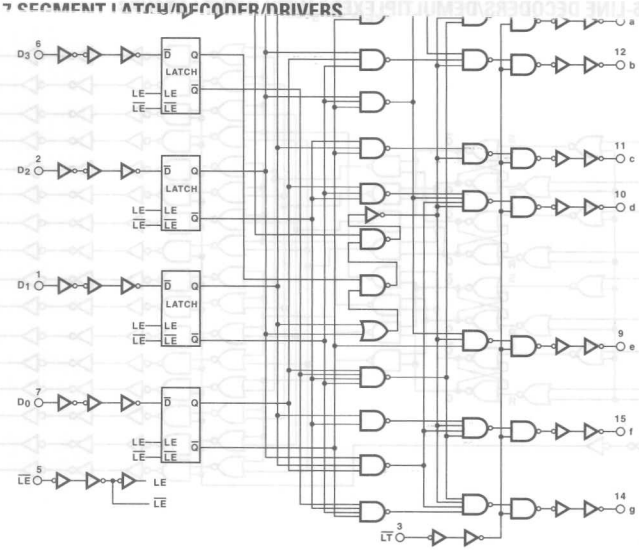

FUNCTION TABLE

$\overline{LE}$	$\overline{Bl}$	$\overline{LT}$	D_3	D_2	D_1	D_0	a	b	c	d	e	f	g	Display
X	X	L	X	X	X	X	H	H	H	H	H	H	H	8
X	L	H	X	X	X	X	L	L	L	L	L	L	L	Blank
L	H	H	L	L	L	L	H	H	H	H	H	H	L	0
L	H	H	L	L	L	H	L	H	H	L	L	L	L	1
L	H	H	L	L	H	L	H	H	L	H	H	H	L	2
L	H	H	L	L	H	H	H	H	H	H	L	L	H	3
L	H	H	L	H	L	L	L	H	H	L	L	H	H	4
L	H	H	L	H	L	H	H	L	H	H	L	H	H	5
L	H	H	L	H	H	L	L	L	H	H	H	H	H	6
L	H	H	L	H	H	H	H	H	H	L	L	L	L	7
L	H	H	H	L	L	L	H	H	H	H	H	H	H	8
L	H	H	H	L	L	H	H	H	H	L	L	H	H	9
L	H	H	H	L	H	L	L	L	L	L	L	L	L	Blank
L	H	H	H	L	H	H	L	L	L	L	L	L	L	Blank
L	H	H	H	H	L	L	L	L	L	L	L	L	L	Blank
L	H	H	H	H	L	H	L	L	L	L	L	L	L	Blank
L	H	H	H	H	H	L	L	L	L	L	L	L	L	Blank
L	H	H	H	H	H	H	L	L	L	L	L	L	L	Blank
H	H	H	X	X	X	X								

NOTES:
X = Don't Care
Depends on BCD code previously applied when $\overline{LE}$ = L
Display is blank for all illegal input codes (BCD > HLLH).

RECOMMENDED OPERATING CONDITIONS

PARAMETER	MAX or MIN	CD74 HC	CD74 HCT	UNIT
I_{CC}	MAX	0.16	0.16	mA
I_{OH}	MAX	-7.4	-7.4	mA
I_{OL}	MAX	4	4	mA

SWITCHING CHARACTERISTICS

PARAMETER	INPUT	OUTPUT	MAX or MIN	CD74 HC	CD74 HCT
t_W	Latch Enable		MIN	20	20
t_{su}	Dn to $\overline{LE}$		MIN	20	20
t_H	Dn to $\overline{LE}$		MIN	3	5
t_{PLH}	Dn	a to g	MAX	75	75
t_{PHL}				75	75
t_{PLH}	$\overline{LE}$	a to g	MAX	68	68
t_{PHL}				68	68
t_{PLH}	$\overline{Bl}$	a to g	MAX	55	55
t_{PHL}				55	55
t_{PLH}	$\overline{LT}$	a to g	MAX	40	41
t_{PHL}				40	41

UNIT:ns

PRODUCTION DATA information is current as of publication date. Products conform to specifications per the terms of Texas Instruments standard warranty. Production processing does not necessarily include testing of all parameters. See www.ti.com/sc/logic for the most current data sheets.

4-LINE TO 16-LINE DECODERS/DEMULTIPLEXERS WITH INPUT LATCHES

Logic Diagram

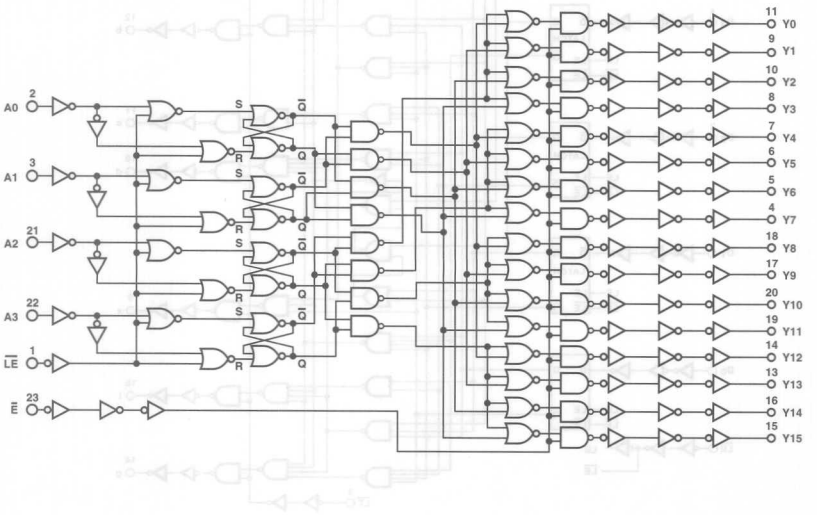

: OBSOLETED or NOT RECOMMENDED NEW DESIGNS

FUNCTION TABLE

($\overline{LE}$ = H)

$\overline{E}$	DECODER INPUTS				ADDRESSED OUTPUT H
	A3	A2	A1	A0	
L	L	L	L	L	Y0
L	L	L	L	H	Y1
L	L	L	H	L	Y2
L	L	L	H	H	Y3
L	L	H	L	L	Y4
L	L	H	L	H	Y5
L	L	H	H	L	Y6
L	L	H	H	H	Y7
L	H	L	L	L	Y8
L	H	L	L	H	Y9
L	H	L	H	L	Y10
L	H	L	H	H	Y11
L	H	H	L	L	Y12
L	H	H	L	H	Y13
L	H	H	H	L	Y14
L	H	H	H	H	Y15
H	X	X	X	X	All outputs = L

H = high, L = low, X = don't care

RECOMMENDED OPERATING CONDITIONS

PARAMETER	MAX or MIN	SN74 HC	CD74 HC	CD74 HCT	UNIT
I_{CC}	MAX	0.08	0.16	0.08	mA
I_{OH}	MAX	-4	-4	-6	mA
I_{OL}	MAX	4	4	6	mA

SWITCHING CHARACTERISTICS

PARAMETER	INPUT	OUTPUT	MAX or MIN	SN74 HC	CD74 HC	CD74 HCT
t_w	LE ($\overline{LE}$)		MIN	20	22	38
t_{su}	LE ($\overline{LE}$)		MIN	25	30	25
t_h	LE ($\overline{LE}$)		MIN	5	0	5
t_{PLH}	A, B, C, D (A1, 2, 3, 4)	Y	MAX	58	83	69
t_{PHL}				58	83	69
t_{PLH}	LE ($\overline{LE}$)	Y	MAX	58	68	63
t_{PHL}				58	68	63
t_{PLH}	$\overline{G}$ ($\overline{E}$)	Y	MAX	44	53	50
t_{PHL}				44	53	50

UNIT:ns

PRODUCTION DATA information is current as of publication date. Products conform to specifications per the terms of Texas Instruments standard warranty. Production processing does not necessarily include testing of all parameters. See www.ti.com/sc/logic for the most current data sheets.

Logic Diagram

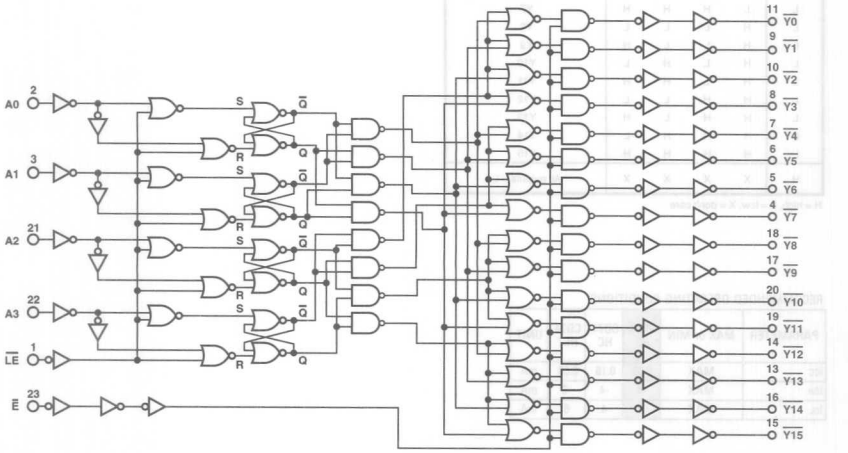

: OBSOLETED or NOT RECOMMENDED NEW DESIGNS

FUNCTION TABLE

($\overline{LE}$ = H)

$\overline{E}$	DECODER INPUTS				ADDRESSED OUTPUT L
	A3	A2	A1	A0	
L	L	L	L	L	Y0
L	L	L	L	H	Y1
L	L	L	H	L	Y2
L	L	L	H	H	Y3
L	L	H	L	L	Y4
L	L	H	L	H	Y5
L	L	H	H	L	Y6
L	L	H	H	H	Y7
L	H	L	L	L	Y8
L	H	L	L	H	Y9
L	H	L	H	L	Y10
L	H	L	H	H	Y11
L	H	H	L	L	Y12
L	H	H	L	H	Y13
L	H	H	H	L	Y14
L	H	H	H	H	Y15
H	X	X	X	X	All outputs = H

H = high, L = low, X = don't care

RECOMMENDED OPERATING CONDITIONS

PARAMETER	MAX or MIN	SN74 HC	CD74 HC	CD74 HCT	UNIT
I_{CC}	MAX	0.08	0.16	0.08	mA
I_{OH}	MAX	-4	-4	-6	mA
I_{OL}	MAX	4	4	6	mA

SWITCHING CHARACTERISTICS

PARAMETER	INPUT	OUTPUT	MAX or MIN	SN74 HC	CD74 HC	CD74 HCT
t_w	LE ($\overline{LE}$)		MIN	20	22	38
t_{su}	LE ($\overline{LE}$)		MIN	25	30	25
t_h	LE ($\overline{LE}$)		MIN	5	0	5
t_{PLH}	A, B, C, D (A1, 2, 3, 4)	$\overline{Y}$ (CD74HCT:Y)	MAX	58	83	69
t_{PHL}				58	83	69
t_{PLH}	$\overline{LE}$ ($\overline{LE}$)	$\overline{Y}$ (CD74HCT:Y)	MAX	58	68	63
t_{PHL}				58	68	63
t_{PLH}	$\overline{G}$ ($\overline{E}$)	$\overline{Y}$ (CD74HCT:Y)	MAX	44	53	50
t_{PHL}				44	53	50

UNIT:ns

4518

DUAL SYNCHRONOUS COUNTERS

Logic Diagram

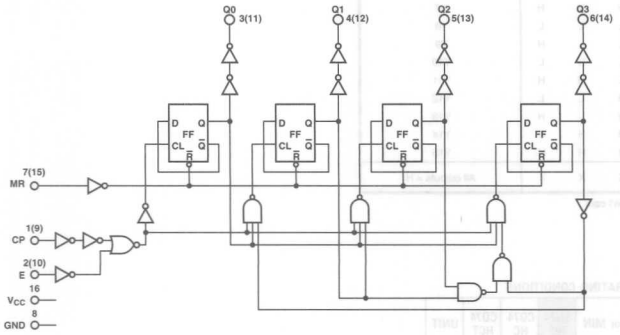

FUNCTION TABLE

INPUTS			OUTPUT STATE
CP	E	MR	
↑	H	L	Increment Counter
L	↓	L	Increment Counter
↓	X	L	No Change
H	↑	L	No Change
↑	L	L	No Change
H	↓	L	No Change
L	X	H	Q_0 thru Q_3 = L

RECOMMENDED OPERATING CONDITIONS

PARAMETER	MAX or MIN	CD74 HC	UNIT
I_{CC}	MAX	0.16	mA
I_{OH}	MAX	-4	mA
I_{OL}	MAX	4	mA

SWITCHING CHARACTERISTICS

PARAMETER	INPUT	OUTPUT	MAX or MIN	CD74 HC
fmax			MIN	20
tw	CP		MIN	24
	MR			30
tsu	Enable to CP		MIN	24
	CP to Enable			24
t_{PLH}	CP	Qn	MAX	72
t_{PHL}				72
t_{PLH}	Enable	Qn	MAX	72
t_{PHL}				72
t_{PLH}	MR	Qn	MAX	45
t_{PHL}				45

UNIT fmax : MHz other : ns

: OBSOLETED or NOT RECOMMENDED NEW DESIGNS

Logic Diagram

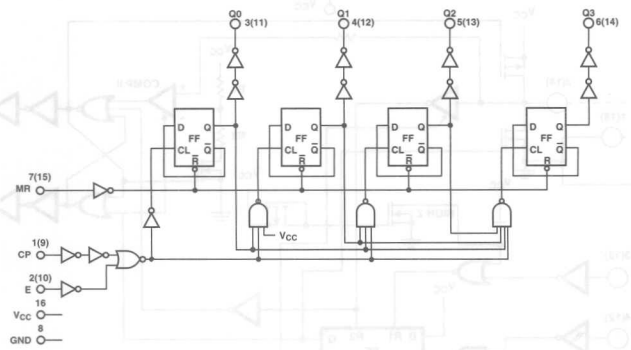

FUNCTION TABLE

INPUTS			OUTPUT STATE
CP	E	MR	
↑	H	L	Increment Counter
L	↓	L	Increment Counter
↓	X	L	No Change
X	↑	L	No Change
↑	L	L	No Change
H	↓	L	No Change
X	X	H	Q_0 thru Q_3 = L

RECOMMENDED OPERATING CONDITIONS

PARAMETER	MAX or MIN	CD74 HC	CD74 HCT	UNIT
I_{CC}	MAX	0.16	0.16	mA
I_{OH}	MAX	-4	-4	mA
I_{OL}	MAX	4	4	mA

SWITCHING CHARACTERISTICS

PARAMETER	INPUT	OUTPUT	MAX or MIN	CD74 HC	CD74 HCT
fmax			MIN	20	17
tw	CP		MIN	24	30
	MR			30	30
tsu	Enable to CP		MIN	24	24
	CP to Enable			24	-
t_{PLH}	CP	Qn	MAX	72	80
t_{PHL}				72	80
t_{PLH}	Enable	Qn	MAX	72	83
t_{PHL}				72	83
t_{PLH}	MR	Qn	MAX	45	53
t_{PHL}				45	53

UNIT fmax : MHz other : ns

PRODUCTION DATA information is current as of publication date. Products conform to specifications per the terms of Texas Instruments standard warranty. Production processing does not necessarily include testing of all parameters. See www.ti.com/sc/logic for the most current data sheets.

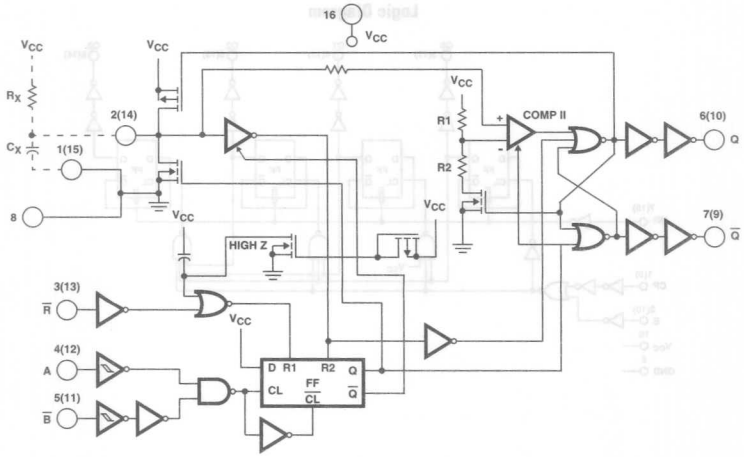

: OBSOLETED or NOT RECOMMENDED NEW DESIGNS

RECOMMENDED OPERATING CONDITIONS

PARAMETER	MAX or MIN	CD74 HC	CD74 HCT	UNIT
I_{CC}	MAX	0.16	0.16	mA
I_{OH}	MAX	-4	-4	mA
I_{OL}	MAX	4	4	mA

SWITCHING CHARACTERISTICS

PARAMETER	INPUT	OUTPUT	MAX or MIN	CD74 HC	CD74 HCT
$t_{W\,H}$	A, $\overline{B}$		MIN	24	24
t_{WL}	A, $\overline{B}$			24	24
t_{WL}	$\overline{R}$			24	30
t_{PLH}	A, $\overline{B}$	Q	MAX	75	83
t_{PHL}		$\overline{Q}$		75	83
t_{PLH}	$\overline{R}$	$\overline{Q}$	MAX	-	75
t_{PHL}		Q		75	60

UNIT:ns

Logic Diagram

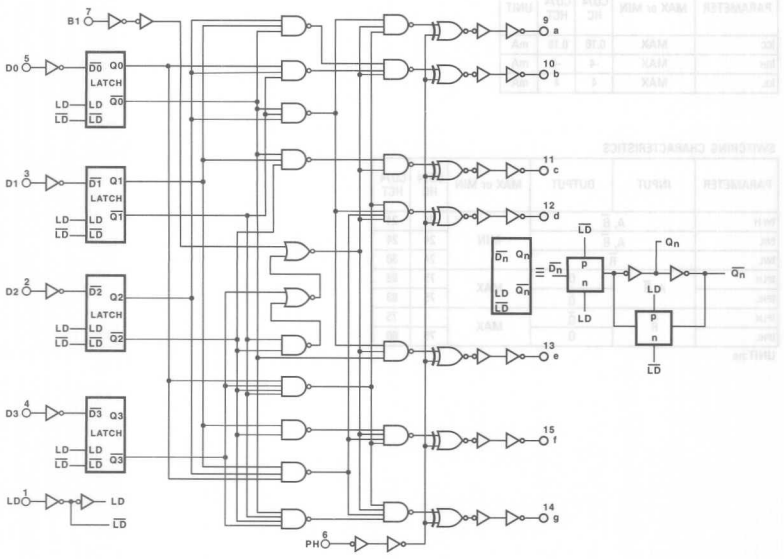

: OBSOLETED or NOT RECOMMENDED NEW DESIGNS

FUNCTION TABLE

LD	B1	PH	D3	D2	D1	D0	a	b	c	d	e	f	g	Display
X	H	L	X	X	X	X	L	L	L	L	L	L	L	Blank
H	L	L	L	L	L	L	H	H	H	H	H	H	L	0
H	L	L	L	L	L	H	L	H	H	L	L	L	L	1
H	L	L	L	L	H	L	H	H	L	H	H	L	H	2
H	L	L	L	L	H	H	H	H	H	H	L	L	H	3
H	L	L	L	H	L	L	L	H	H	L	L	H	H	4
H	L	L	L	H	L	H	H	L	H	H	L	H	H	5
H	L	L	L	H	H	L	H	L	H	H	H	H	H	6
H	L	L	L	H	H	H	H	H	H	L	L	L	L	7
H	L	L	H	L	L	L	H	H	H	H	H	H	H	8
H	L	L	H	L	L	H	H	H	H	H	L	H	H	9
H	L	L	H	L	H	L	L	L	L	L	L	L	L	Blank
H	L	L	H	L	H	H	L	L	L	L	L	L	L	Blank
H	L	L	H	H	L	L	L	L	L	L	L	L	L	Blank
H	L	L	H	H	L	H	L	L	L	L	L	L	L	Blank
H	L	L	H	H	H	L	L	L	L	L	L	L	L	Blank
H	L	L	H	H	H	H	L	L	L	L	L	L	L	Blank
L	L	L	X	X	X	X								
as above		N	as above				inverse above							as above

NOTES:
Depends open the BCD code previously appied when LE = High

RECOMMENDED OPERATING CONDITIONS

PARAMETER	MAX or MIN	CD74 HC	CD74 HCT	UNIT
I_{CC}	MAX	0.16	0.16	mA
I_{OH}	MAX	-1	-1	mA
I_{OL}	MAX	1	1	mA

SWITCHING CHARACTERISTICS

PARAMETER	INPUT	OUTPUT	MAX or MIN	CD74 HC	CD74 HCT
tw	Latch Disable		MIN	13	13
tsu	Dn to LD		MIN	15	15
tH	Dn to LD		MIN	8	10
t_{PLH}	Dn	a to g	MAX	85	100
t_{PHL}				85	100
t_{PLH}	LD	a to g	MAX	93	96
t_{PHL}				93	96
t_{PLH}	B1	a to g	MAX	66	83
t_{PHL}				66	83
t_{PLH}	PH	a to g	MAX	50	83
t_{PHL}				50	83

UNIT:ns

5400

Logic Diagram

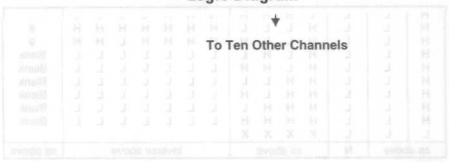

FUNCTION TABLE

INPUTS			INPUT
$\overline{OE1}$	$\overline{OE2}$	D	Y
L	L	L	L
L	L	H	H
H	X	X	Z
X	H	X	Z

RECOMMENDED OPERATING CONDITIONS

PARAMETER	MAX or MIN	ABT	UNIT
I_{CC}	MAX	45	mA
I_{OH}	MAX	-12	mA
I_{OL}	MAX	12	mA

SWITCHING CHARACTERISTICS

PARAMETER	INPUT	OUTPUT	MAX or MIN	ABT
t_{PLH}	D	Y	MAX	6.2
t_{PHL}				5.6
t_{PZH}	$\overline{OE}$	Y	MAX	8.7
t_{PZL}				7.5
t_{PHZ}	$\overline{OE}$	Y	MAX	5.2
t_{PLZ}				6.9

UNIT: ns

5401

11-BIT LINE/MEMORY DRIVERS WITH 3-STATE OUTPUTS

- Output Ports Have Equivalent 25-Ω Series Resistors, So No External Resistors Are Required (SN74ABT5401)

Logic Diagram

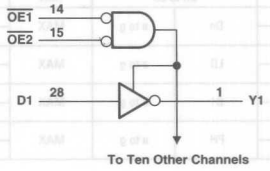

FUNCTION TABLE

INPUTS			OUTPUT
$\overline{OE1}$	$\overline{OE2}$	D	Y
L	L	L	H
L	L	H	L
H	X	X	Z
X	H	X	Z

RECOMMENDED OPERATING CONDITIONS

PARAMETER	MAX or MIN	ABT	UNIT
I_{CC}	MAX	45	mA
I_{OH}	MAX	-12	mA
I_{OL}	MAX	12	mA

SWITCHING CHARACTERISTICS

PARAMETER	INPUT	OUTPUT	MAX or MIN	ABT
t_{PLH}	D	Y	MAX	6.9
t_{PHL}				5.7
t_{PZH}	$\overline{OE}$	Y	MAX	8.5
t_{PZL}				6.8
t_{PHZ}	$\overline{OE}$	Y	MAX	5.2
t_{PLZ}				6.9

UNIT: ns

: OBSOLETED or NOT RECOMMENDED NEW DESIGNS

5402
(SN74ABT5402A)

Logic Diagram

FUNCTION TABLE

INPUTS			OUTPUT
$\overline{OE1}$	$\overline{OE2}$	D	Y
L	L	L	L
L	L	H	H
H	X	X	Z
X	H	X	Z

RECOMMENDED OPERATING CONDITIONS

PARAMETER	MAX or MIN	ABT	UNIT
I_{CC}	MAX	48	mA
I_{OH}	MAX	-12	mA
I_{OL}	MAX	12	mA

SWITCHING CHARACTERISTICS

PARAMETER	INPUT	OUTPUT	MAX or MIN	ABT
t_{PLH}	D	Y	MAX	6.2
t_{PHL}				5.6
t_{PZH}	$\overline{OE}$	Y	MAX	8.7
t_{PZL}				7.5
t_{PHZ}	$\overline{OE}$	Y	MAX	5.2
t_{PLZ}				6.9

UNIT: ns

5403

11-BIT LINE/MEMORY DRIVERS WITH 3-STATE OUTPUTS

- Output Ports Have Equivalent 25-Ω Series Resistors, So No External Resistors Are Required (SN74ABT5403)

Logic Diagram

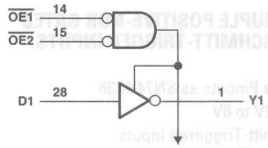

FUNCTION TABLE

INPUTS			OUTPUT
$\overline{OE1}$	$\overline{OE2}$	D	Y
L	L	L	H
L	L	H	L
H	X	X	Z
X	H	X	Z

RECOMMENDED OPERATING CONDITIONS

PARAMETER	MAX or MIN	ABT	UNIT
I_{CC}	MAX	45	mA
I_{OH}	MAX	-12	mA
I_{OL}	MAX	12	mA

SWITCHING CHARACTERISTICS

PARAMETER	INPUT	OUTPUT	MAX or MIN	ABT
t_{PLH}	D	Y	MAX	6.9
t_{PHL}				5.7
t_{PZH}	$\overline{OE}$	Y	MAX	8.5
t_{PZL}				6.8
t_{PHZ}	$\overline{OE}$	Y	MAX	5.2
t_{PLZ}				6.9

UNIT: ns

PRODUCTION DATA information is current as of publication date. Products conform to specifications per the terms of Texas Instruments standard warranty. Production processing does not necessarily include testing of all parameters. See www.ti.com/sc/logic for the most current data sheets.

7001

QUADRUPLE POSITIVE-AND GATES WITH SCHMITT-TRIGGER INPUTS

- Same Pinouts as SN74HC08
- V_{CC}: 2V to 6V
- Schmitt-Triggered Inputs
- Y = A•B

Logic Diagram

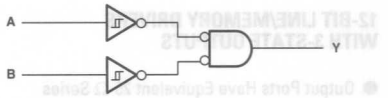

RECOMMENDED OPERATING CONDITIONS

PARAMETER	MAX or MIN	HC	UNIT
I_{CC}	MAX	0.02	mA
I_{OH}	MAX	-4	mA
I_{OL}	MAX	4	mA

SWITCHING CHARACTERISTICS

PARAMETER	INPUT	OUTPUT	MAX or MIN	HC
t_{PLH}	A or B	Y	MAX	33
t_{PHL}				33

UNIT: ns

7002

QUADRUPLE POSITIVE-NOR GATES WITH SCHMITT-TRIGGER INPUTS

- Same Pinouts as SN74HC36
- V_{CC}: 2V to 6V
- Schmitt-Triggered Inputs
- $Y = \overline{A} + \overline{B}$

Logic Diagram

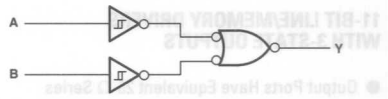

RECOMMENDED OPERATING CONDITIONS

PARAMETER	MAX or MIN	HC	UNIT
I_{CC}	MAX	0.02	mA
I_{OH}	MAX	-4	mA
I_{OL}	MAX	4	mA

SWITCHING CHARACTERISTICS

PARAMETER	INPUT	OUTPUT	MAX or MIN	HC
t_{PLH}	A or B	Y	MAX	33
t_{PHL}				33

UNIT: ns

: OBSOLETED or NOT RECOMMENDED NEW DESIGNS

7032

QUADRUPLE 2-INPUT POSITIVE-OR GATES WITH SCHMITT-TRIGGER INPUTS

- Same Pinouts as SN74HC32
- V_{CC}: 2V to 6V
- Schmitt-Triggered Inputs
- Y = A + B

Logic Diagram

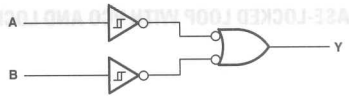

RECOMMENDED OPERATING CONDITIONS

PARAMETER	MAX or MIN	HC	UNIT
I_{CC}	MAX	0.02	mA
I_{OH}	MAX	-4	mA
I_{OL}	MAX	4	mA

SWITCHING CHARACTERISTICS

PARAMETER	INPUT	OUTPUT	MAX or MIN	HC
t_{PLH}	A or B	Y	MAX	33
t_{PHL}				33

UNIT: ns

Logic Diagram

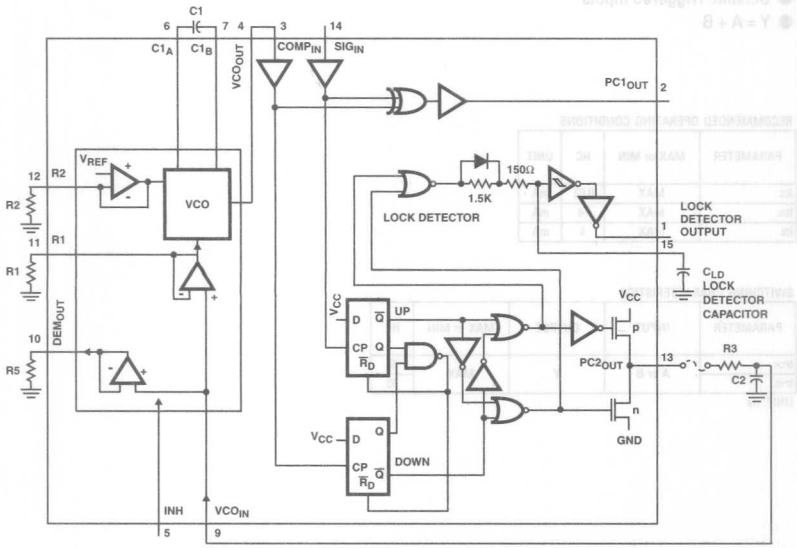

RECOMMENDED OPERATING CONDITIONS

PARAMETER	MAX or MIN	CD74 HC	CD74 HCT	UNIT
I_{CC}	MAX	0.16	0.16	mA
I_{OH}	MAX	-4	-4	mA
I_{OL}	MAX	4	4	mA

SWITCHING CHARACTERISTICS

PARAMETER	INPUT	OUTPUT	MAX or MIN	CD74 HC	CD74 HCT
t_{PLH}	SIGIN, COMPIN	PC1OUT	MAX	60	68
t_{PHL}				60	68
t_{PZH}	SIGIN, COMPIN	PC2OUT	MAX	84	90
t_{PZL}				84	90
t_{PHZ}	SIGIN, COMPIN	PC2OUT	MAX	98	105
t_{PLZ}				98	105

UNIT:ns

: OBSOLETED or NOT RECOMMENDED NEW DESIGNS

FUNCTION TABLE

INPUTS		OUTPUT
A	B	Y
L	L	H
L	H	L
H	L	L
H	H	H

NOTES:
H = High Voltage Level
L = Low Voltage Level

RECOMMENDED OPERATING CONDITIONS

PARAMETER	MAX or MIN	SN74 HC	CD74 HC	UNIT
I_{CC}	MAX	0.02	0.04	mA
I_{OH}	MAX	-4	-4	V
I_{OL}	MAX	4	4	V

SWITCHING CHARACTERISTICS

PARAMETER	INPUT	OUTPUT	MAX or MIN	SN74 HC	CD74 HC
t_{PLH}	A or B	Y	MAX	25	35
t_{PHL}		Y	MAX	25	35

UNIT:ns

8003

DUAL 2-INPUT POSITIVE-NAND GATES

Logic Diagram

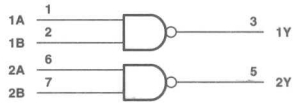

RECOMMENDED OPERATING CONDITIONS

PARAMETER	MAX or MIN	ALS	AS	UNIT
I_{CC}	MAX	1.5	8.7	mA
I_{OH}	MAX	-0.4	-2	mA
I_{OL}	MAX	8	20	mA

SWITCHING CHARACTERISTICS

PARAMETER	INPUT	OUTPUT	MAX or MIN	ALS	AS
t_{PLH}	A or B	Y	MAX	11	4.5
t_{PHL}				8	4

UNIT: ns

PRODUCTION DATA information is current as of publication date. Products conform to specifications per the terms of Texas Instruments standard warranty. Production processing does not necessarily include testing of all parameters. See www.ti.com/sc/logic for the most current data sheets.

16-BIT BUS BUFFERS/DRIVERS WITH 3-STATE OUTPUTS

Logic Diagram

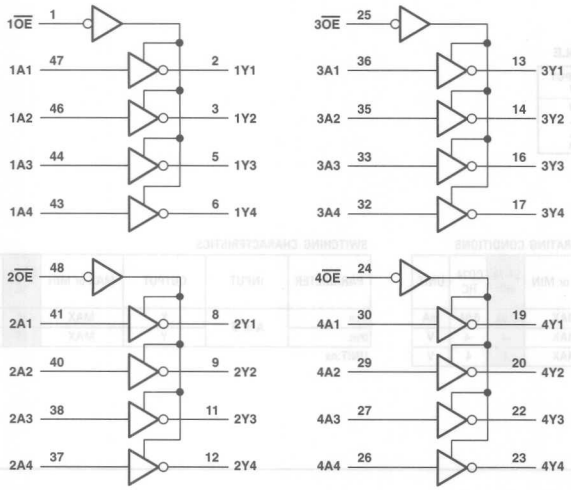

: OBSOLETED or NOT RECOMMENDED NEW DESIGNS

FUNCTION TABLE
(each 4-bit buffer)

INPUTS		OUTPUT
$\overline{OE}$	A	Y
L	H	L
L	L	H
H	X	Z

RECOMMENDED OPERATING CONDITIONS

PARAMETER	MAX or MIN	ABT	LVT 3V	LVTH 3V	ALVT 3V	AC	ACT	AHC	AHCT	LVCH 3V	LVCZ 3V	ALVCH 3V	UNIT
I_{CC}	MAX	34	5	5	5	0.08	0.08	0.04	0.04	0.02	0.1	0.04	mA
I_{OH}	MAX	-32	-32	-32	-32	-24	-24	-8	-8	-24	-24	-24	mA
I_{OL}	MAX	64	64	64	64	24	24	8	8	24	24	24	mA

SWITCHING CHARACTERISTICS

PARAMETER	INPUT	OUTPUT	MAX or MIN	ABT	LVT 3V	LVTH 3V	ALVT 3V	AC	ACT	AHC	AHCT
t_{PLH}	A	Y	MAX	4.7	3.5	3.5	3.3	5.8	8.5	8.5	10.5
t_{PHL}				4.8	3.5	3.5	3.2	7.1	10.2	8.5	10.5
t_{PZH}	$\overline{OE}$	Y	MAX	5.3	4	4	3.7	6.6	9.4	10.5	13
t_{PZL}				7.1	4.4	4.4	3.1	8.1	11.4	10.5	13
t_{PHZ}	$\overline{OE}$	Y	MAX	6.1	4.5	4.5	5	8.1	12	10.5	13
t_{PLZ}				5.6	4.2	4.2	4.1	7.3	10.7	10.5	13

PARAMETER	INPUT	OUTPUT	MAX or MIN	LVCH 3V	LVCZ 3V	ALVCH 3V
t_{PLH}	A	Y	MAX	4.2	4.2	3.9
t_{PHL}				4.2	4.2	3.9
t_{PZH}	$\overline{OE}$	Y	MAX	4.7	4.7	5
t_{PZL}				4.7	4.7	5
t_{PHZ}	$\overline{OE}$	Y	MAX	5.9	5.9	4.4
t_{PLZ}				5.9	5.9	4.4

UNIT: ns

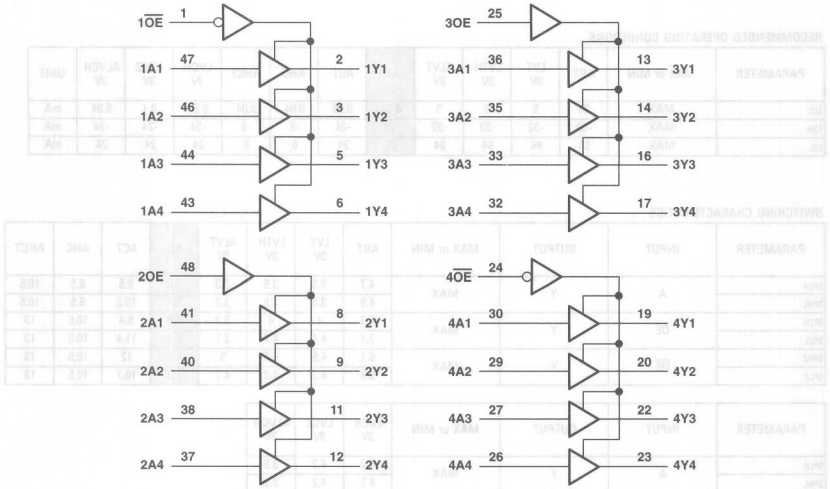

: OBSOLETED or NOT RECOMMENDED NEW DESIGNS

FUNCTION TABLE

INPUTS		OUTPUTS
$1\overline{OE}$, $4\overline{OE}$	1A, 4A	1Y, 4Y
L	H	L
L	L	H
H	X	Z

INPUTS		OUTPUTS
2OE, 3OE	2A, 3A	2Y, 3Y
H	H	H
H	L	L
L	X	Z

RECOMMENDED OPERATING CONDITIONS

PARAMETER	MAX or MIN	ABT	LVTH 3V	ACT	UNIT
I_{CC}	MAX	34	5	0.08	mA
I_{OH}	MAX	-32	-32	-24	mA
I_{OL}	MAX	64	64	24	mA

SWITCHING CHARACTERISTICS

PARAMETER	INPUT	OUTPUT	MAX or MIN	ABT	LVTH 3V	ACT
t_{PLH}	A	Y	MAX	3.7	3.5	9.5
t_{PHL}				4.5	3.5	9.1
t_{PZH}	$\overline{OE}$ or OE	Y	MAX	5	4.5	9.4
t_{PZL}				6.9	4.5	10.5
t_{PHZ}	$\overline{OE}$ or OE	Y	MAX	6.2	5.3	11.6
t_{PLZ}				5.6	4.9	10.7

UNIT: ns

16-BIT BUS BUFFERS/DRIVERS WITH 3-STATE OUTPUTS

Logic Diagram

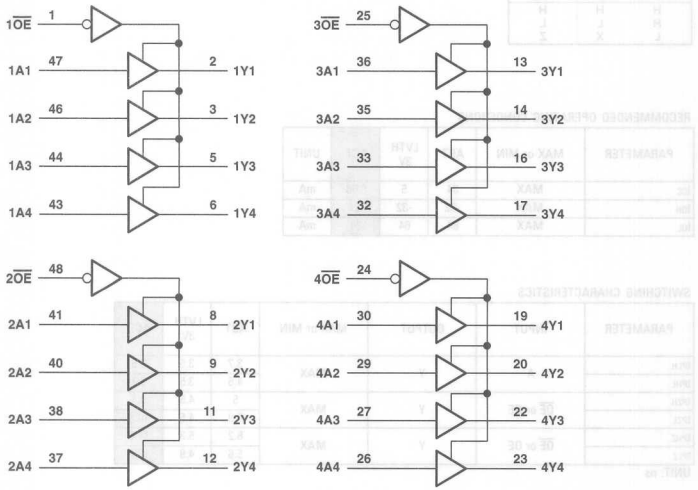

: OBSOLETED or NOT RECOMMENDED NEW DESIGNS

FUNCTION TABLE
(each buffer)

INPUTS		OUTPUT
$\overline{OE}$	A	Y
L	H	H
L	L	L
H	X	Z

RECOMMENDED OPERATING CONDITIONS

PARAMETER	MAX or MIN	ABT	ABTH	LVT 3V	LVTH 3V	ALVTH 3V	AC	ACT	AHC	AHCT	LVC 3V	LVCH 3V	UNIT
I_{CC}	MAX	32	32	5	5	5	0.08	0.08	0.04	0.04	0.02	0.02	mA
I_{OH}	MAX	-32	-32	-32	-32	-32	-24	-24	-8	-8	-24	-24	mA
I_{OL}	MAX	64	64	64	64	64	24	24	8	8	24	24	mA

PARAMETER	MAX or MIN	LVCZ 3V	ALVC 3V	ALVCH 3V	AVC 3V	UNIT
I_{CC}	MAX	0.1	0.04	0.04	0.04	mA
I_{OH}	MAX	-24	-24	-24	-12	mA
I_{OL}	MAX	24	24	24	12	mA

SWITCHING CHARACTERISTICS

PARAMETER	INPUT	OUTPUT	MAX or MIN	ABT	ABTH	LVT 3V	LVTH 3V	ALVTH 3V	AC	ACT	AHC
t_{PLH}	A	Y	MAX	3.5	3.5	3.2	3.2	2.4	7.1	9.4	8.5
t_{PHL}				4.1	4.1	3.2	3.2	2.5	7.9	9.5	8.5
t_{PZH}	$\overline{OE}$	Y	MAX	4.8	4.8	4	4	3.8	7.5	8.9	10.5
t_{PZL}				4.8	4.8	4	4	2.9	9	10.3	10.5
t_{PHZ}	$\overline{OE}$	Y	MAX	4.8	4.8	4.5	4.5	4.2	8.4	11.3	10.5
t_{PLZ}				4.1	4.1	4.2	4.2	3.6	7.6	10.3	10.5

PARAMETER	INPUT	OUTPUT	MAX or MIN	AHCT	LVC 3V	LVCH 3V	LVCZ 3V	ALVC 3V	ALVCH 3V	AVC 3V
t_{PLH}	A	Y	MAX	10.5	4.1	4.1	4.1	3	3	1.7
t_{PHL}				10.5	4.1	4.1	4.1	3	3	1.7
t_{PZH}	$\overline{OE}$	Y	MAX	13	4.6	4.6	4.6	4.4	4.4	3.5
t_{PZL}				13	4.6	4.6	4.6	4.4	4.4	3.5
t_{PHZ}	$\overline{OE}$	Y	MAX	13	5.8	5.8	5.8	4.1	4.1	3.5
t_{PLZ}				13	5.8	5.8	5.8	4.1	4.1	3.5

UNIT: ns

16245

16-BIT BUS TRANSCEIVER WITH 3-STATE OUTPUTS

Logic Diagram

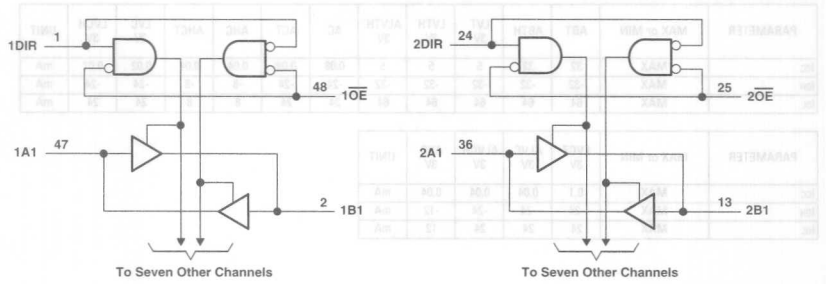

: OBSOLETED or NOT RECOMMENDED NEW DESIGNS

RECOMMENDED OPERATING CONDITIONS

PARAMETER	MAX or MIN	ABT	ABTH	LVT 3V	LVTH 3V	ALVTH 3V	AC	ACT	AHCT	UNIT
I_{CC}	MAX	32	32	5	5	5	0.08	0.08	0.04	mA
I_{OH}	MAX	-32	-32	-32	-32	-32	-24	-24	-8	mA
I_{OL}	MAX	64	64	64	64	64	24	24	8	mA

PARAMETER	MAX or MIN	LVC 3V	LVCH 3V	LVCHR 3V	LVCZ 3V	ALVCH 3V	ALVC HR 3V	AVC 3V	UNIT
I_{CC}	MAX	0.02	0.02	0.02	0.06	0.04	0.04	0.04	mA
I_{OH}	MAX	-24	-24	-12	-24	-24	-12	-12	mA
I_{OL}	MAX	24	24	12	24	24	12	12	mA

SWITCHING CHARACTERISTICS

PARAMETER	INPUT	OUTPUT	MAX or MIN	ABT	ABTH	LVT 3V	LVTH 3V	ALVTH 3V	AC	ACT	AHCT
t_{PLH}	A or B	B or A	MAX	3.9	3.9	3.3	3.3	3.1	7.9	10.5	10.5
t_{PHL}				4.2	4.2	3.3	3.3	2.9	8.9	10.2	10.5
t_{PZH}	$\overline{OE}$	B or A	MAX	6.3	6.3	4.5	4.5	4.2	8.6	10	15
t_{PZL}				6.4	6.4	4.6	4.6	3.5	10.7	11.6	15
t_{PHZ}	$\overline{OE}$	B or A	MAX	6.3	6.3	5.1	5.1	5.3	9.8	12.6	15
t_{PLZ}				5.2	5.2	5.1	5.1	5	8.7	11.8	15

PARAMETER	INPUT	OUTPUT	MAX or MIN	LVC 3V	LVCH 3V	LVCHR 3V	LVCZ 3V	ALVCH 3V	ALVC HR 3V	AVC 3V
t_{PLH}	A or B	B or A	MAX	4	4	4.8	4	3	4.2	1.7
t_{PHL}				4	4	4.8	4	3	4.2	1.7
t_{PZH}	$\overline{OE}$	B or A	MAX	5.5	5.5	6.3	5.6	4.4	5.6	3.7
t_{PZL}				5.5	5.5	6.3	5.6	4.4	5.6	3.7
t_{PHZ}	$\overline{OE}$	B or A	MAX	6.6	6.6	7.4	6.6	4.1	5.5	3.9
t_{PLZ}				6.6	6.6	7.4	6.6	4.1	5.5	3.9

UNIT: ns

12-BIT TO 24-BIT MULTIPLEXES D-TYPE LATCH WITH 3-STATE OUTPUTS

Logic Diagram

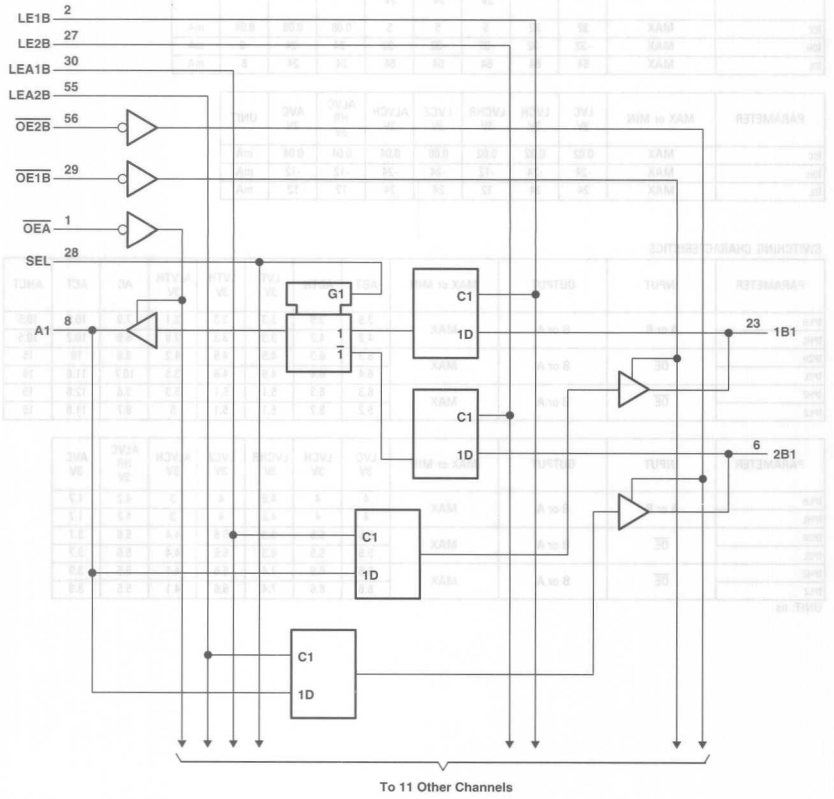

: OBSOLETED or NOT RECOMMENDED NEW DESIGNS

FUNCTION TABLE

B TO A ($\overline{OEB}$ = H)

INPUTS						OUTPUT
1B	2B	SEL	LE1B	LE2B	$\overline{OEA}$	A
H	X	H	H	X	L	H
L	X	H	H	X	L	L
X	X	H	L	X	L	A_0
X	H	L	X	H	L	H
X	L	L	X	H	L	L
X	X	L	X	L	L	A_0
X	X	X	X	X	H	Z

A TO B ($\overline{OEA}$ = H)

INPUTS					OUTPUTS	
1B	LEA1B	LEA2B	OE1B	OE2B	1B	2B
H	H	H	L	L	H	H
L	H	H	L	L	L	L
H	H	L	L	L	H	$2B_0$
L	H	L	L	L	L	$2B_0$
H	L	H	L	L	$1B_0$	H
L	L	H	L	L	$1B_0$	L
X	L	L	L	L	$1B_0$	$2B_0$
X	X	X	H	H	Z	Z
X	X	X	L	H	Active	Z
X	X	X	H	L	Z	Active
X	X	X	L	L	Active	Active

RECOMMENDED OPERATING CONDITIONS

PARAMETER	MAX or MIN	ABTH	ALVCH 3V	UNIT
I_{CC}	MAX	63	0.04	mA
I_{OH}	MAX	-32	-24	mA
I_{OL}	MAX	64	24	mA

SWITCHING CHARACTERISTICS

PARAMETER	INPUT	OUTPUT	MAX or MIN	ABTH	ALVCH 3V
t_w Pulse duration, LE1B, LE2B, LEA1B, or LEA2B high			MIN	3.3	3.3
t_{su} Setup time, data before LE1B, LE2B, LEA1B, or LEA2B ↓			MIN	1.5	1.1
t_h Hold time, data after LE1B, LE2B, LEA1B, or LEA2B ↓			MIN	1	1.5
t_{PLH}	A or B	B or A	MAX	5.6	4.3
t_{PHL}				5.9	4.3
t_{PLH}	LE	A or B	MAX	5.8	4.4
t_{PHL}				5.3	4.4
t_{PLH}	SEL (B1)	A	MAX	5.3	5.6
	SEL (B2)			6	5.6
t_{PHL}	SEL (B1)		MAX	4.4	5.6
	SEL (B2)			5.9	5.6
t_{PZH}	$\overline{OE}$	A or B	MAX	5.7	5.4
t_{PZL}				5.8	5.4
t_{PHZ}	$\overline{OE}$	A or B	MAX	6.4	4.6
t_{PLZ}				4.8	4.6

UNIT: ns

PRODUCTION DATA information is current as of publication date. Products conform to specifications per the terms of Texas Instruments standard warranty. Production processing does not necessarily include testing of all parameters. See www.ti.com/sc/logic for the most current data sheets.

Logic Diagram

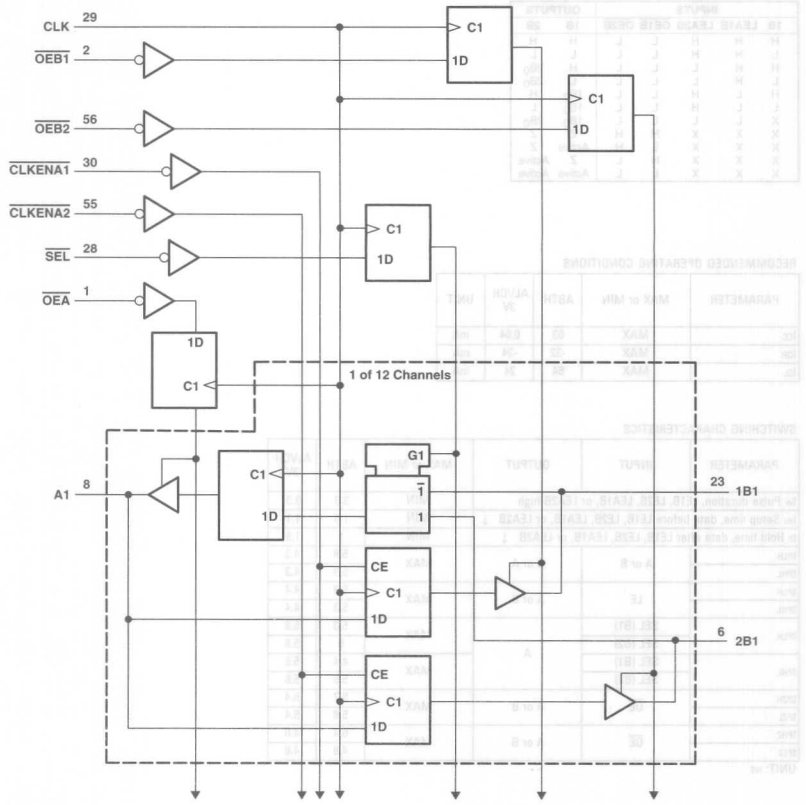

: OBSOLETED or NOT RECOMMENDED NEW DESIGNS

FUNCTION TABLE

INPUTS				OUTPUTS	
CLKENA1	CLKENA2	CLK	A	1B	2B
H	H	X	X	$1B_0$†	$2B_0$†
L	X	↑	L	L	X
L	X	↑	H	H	X
X	L	↑	L	X	L
X	L	↑	H	X	H

† Output level before the indicated steady-state input conditions were established

B-TO-A STORAGE ($\overline{OEA}$ = L)

INPUTS				OUTPUT
CLK	SEL	1B	2B	A
X	H	X	X	A_0†
X	L	X	X	A_0†
↑	H	H	X	L
↑	H	L	X	H
↑	L	X	L	L
↑	L	X	H	H

† Output level before the indicated steady-state input conditions were established

RECOMMENDED OPERATING CONDITIONS

PARAMETER	MAX or MIN	ALVCH 3V	ALVCHR 3V	AVC 3V	UNIT
I_{CC}	MAX	0.04	0.04	0.04	mA
I_{OH}	MAX	-24	-12	-12	mA
I_{OL}	MAX	24	12	12	mA

SWITCHING CHARACTERISTICS

PARAMETER	INPUT	OUTPUT	MAX or MIN	ALVCH 3V	ALVCHR 3V	AVC 3V
f_{max}			MIN	135	135	175
t_w Pulse duration, CLK high or low			MIN	3.3	3.3	3.5
t_{su} Setup time	A data before CLK ↑		MIN	1.7	1	1.9
	B data before CLK ↑		MIN	1.8	1.1	1.9
	$\overline{SEL}$ before CLK ↑		MIN	1.3	1.3	1.3
	$\overline{CLKENA1}$ or $\overline{CLKENA2}$ before CLK ↑		MIN	0.9	0.8	1.1
	$\overline{OE}$ before CLK ↑		MIN	1.3	1.2	1.1
t_h Hold time	A data after CLK ↑		MIN	0.6	1.2	1
	B data after CLK ↑		MIN	0.6	1	0.7
	$\overline{SEL}$ after CLK ↑		MIN	0.7	1.7	0.4
	$\overline{CLKENA1}$ or $\overline{CLKENA2}$ after CLK ↑		MIN	1.1	1.6	1
	$\overline{OE}$ after CLK ↑		MIN	0.8	1.2	0.3
t_{pd}	CLK	B	MAX	6.2	5.8	3
		A		5	5.2	2.7
t_{en}	CLK	B	MAX	6.1	5.8	3.8
		A		5.9	5.3	3.4
t_{dis}	CLK	B	MAX	6.1	6	3.7
		A		5.6	6	3.4

UNIT fmax : MHz other : ns

Logic Diagram

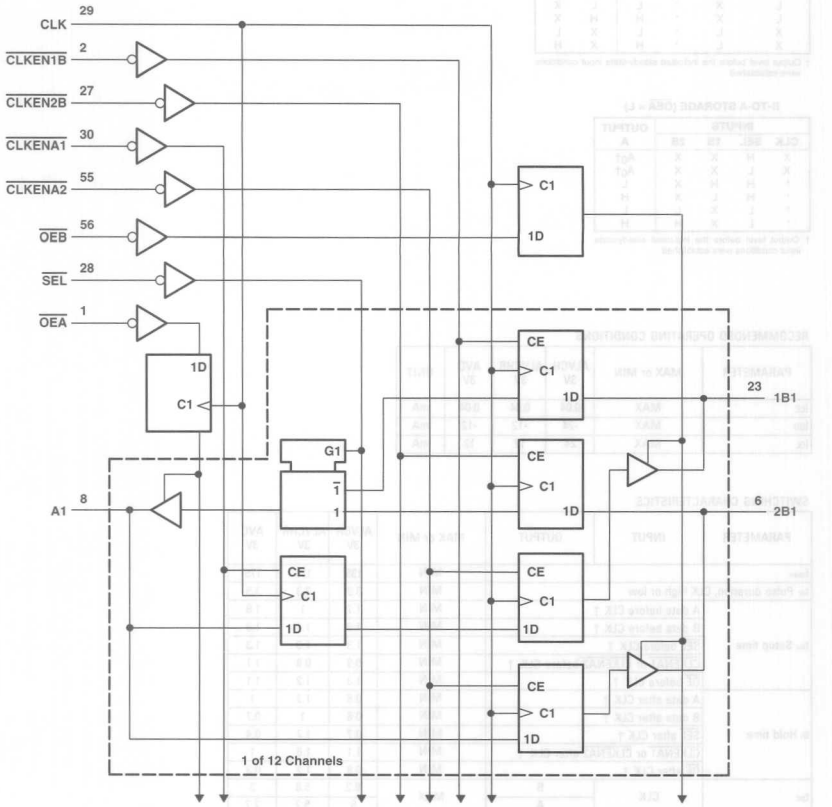

: OBSOLETED or NOT RECOMMENDED NEW DESIGNS

FUNCTION TABLE

OUTPUT ENABLE

INPUTS			OUTPUTS	
CLK	OEA	OEB	A	1B,2B
↑	H	H	Z	Z
↑	H	L	Z	Active
↑	L	H	Active	Z
↑	L	L	Active	Active

A-TO-B STORAGE ($\overline{OEB}$ = L)

INPUTS				OUTPUTS	
CLKENA1	CLKENA2	CLK	A	1B	2B
L	H	↑	L	L†	$2B_0$‡
L	H	↑	H	H†	$2B_0$‡
L	L	↑	L	L†	L
L	L	↑	H	H†	H
H	L	↑	L	$1B_0$‡	L
H	L	↑	H	$1B_0$‡	H
H	H	X	X	$1B_0$‡	$2B_0$‡

† Two CLK edges are needed to propagate data.
‡ Output level before the indicated steady-state input conditions were established

B-TO-A STORAGE ($\overline{OEA}$ = L)

INPUTS						OUTPUT
CLKEN1B	CLKEN2B	CLK	SEL	1B	2B	A
H	X	X	H	X	X	A_0‡
X	H	X	L	X	X	A_0‡
L	X	↑	H	H	X	L
L	X	↑	H	L	X	H
X	L	↑	L	X	L	L
X	L	↑	L	X	H	H

‡ Output level before the indicated steady-state input conditions were established

RECOMMENDED OPERATING CONDITIONS

PARAMETER	MAX or MIN	ALVCH 3V	UNIT
I_{CC}	MAX	0.04	mA
I_{OH}	MAX	-24	mA
I_{OL}	MAX	24	mA

SWITCHING CHARACTERISTICS

PARAMETER	INPUT	OUTPUT	MAX or MIN	ALVCH 3V
f_{max}			MIN	150
t_w Pulse duration, CLK high or low			MIN	3.3
t_{su} Setup time	A data before CLK ↑		MIN	3.1
	B data before CLK ↑		MIN	0.9
	$\overline{CLKENA1}$ or $\overline{CLKENA2}$ before CLK ↑		MIN	2.7
	$\overline{CLKEN1B}$ or $\overline{CLKEN2B}$ before CLK ↑		MIN	2.6
	$\overline{OE}$ before CLK ↑		MIN	3.2
t_h Hold time	A data after CLK ↑		MIN	0.2
	B data after CLK ↑		MIN	1.7
	$\overline{CLKENA1}$ or $\overline{CLKENA2}$ after CLK ↑		MIN	0.3
	$\overline{CLKEN1B}$ or $\overline{CLKEN2B}$ after CLK ↑		MIN	0.6
	$\overline{OE}$ after CLK ↑		MIN	0.1
t_{pd}	CLK	A or B	MAX	5.1
				4.7
	$\overline{SEL}$	A	MAX	5.5
t_{en}	CLK	A or B	MAX	6
				6
t_{dis}	CLK	A or B	MAX	5.8
				5.8

UNIT fmax : MHz other : ns

PRODUCTION DATA information is current as of publication date. Products conform to specifications per the terms of Texas Instruments standard warranty. Production processing does not necessarily include testing of all parameters. See www.ti.com/sc/logic for the most current data sheets.

Logic Diagram

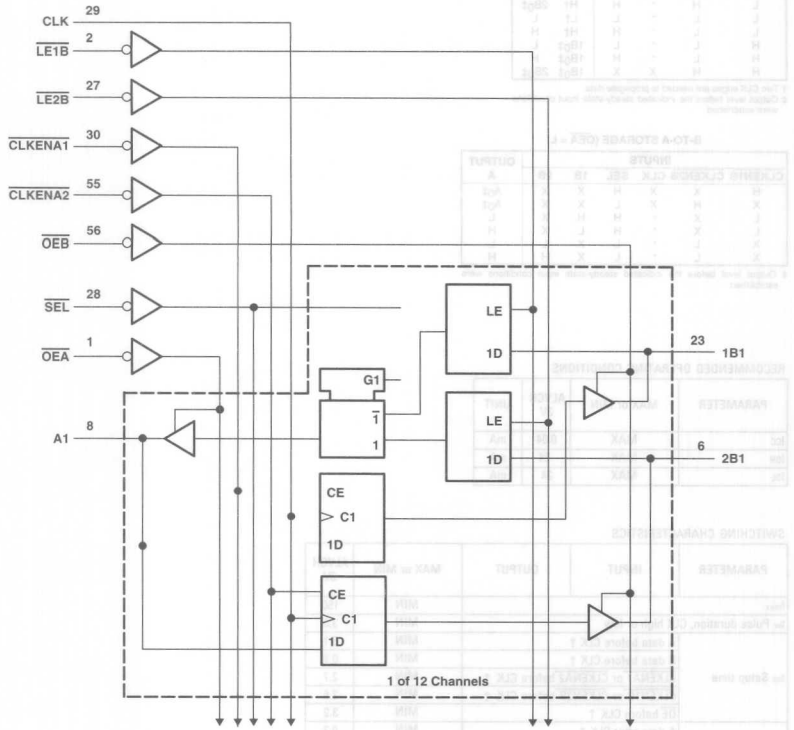

: OBSOLETED or NOT RECOMMENDED NEW DESIGNS

FUNCTION TABLE

OUTPUT ENABLE

INPUTS		OUTPUTS	
$\overline{OEA}$	$\overline{OEB}$	A	1B, 2B
H	X	Z	Z
L	L	Z	Active
L	H	Active	Z
L	L	Active	Active

A-TO-B STORAGE ($\overline{OEB}$ = L)

INPUTS				OUTPUTS	
$\overline{CLKENA1}$	$\overline{CLKENA2}$	CLK	A	1B	2B
H	H	X	X	$1B_0$†	$2B_0$†
L	X	↑	L	L	X
L	X	↑	H	H	X
X	L	↑	L	X	L
X	L	↑	H	A_0	H

B-TO-A STORAGE ($\overline{OEA}$ = L)

INPUTS				OUTPUTA
$\overline{LE}$	SEL	1B	2B	
H	X	X	X	A_0†
H	X	X	X	A_0†
L	H	L	X	L
L	H	H	X	H
L	L	X	L	L
L	L	X	H	H

† Output level before the indicated steady-state input conditions were established

RECOMMENDED OPERATING CONDITIONS

PARAMETER	MAX or MIN	ALVCH 3V	UNIT
I_{CC}	MAX	0.04	mA
I_{OH}	MAX	-24	mA
I_{OL}	MAX	24	mA

SWITCHING CHARACTERISTICS

PARAMETER	INPUT	OUTPUT	MAX or MIN	ALVCH 3V
f_{max}			MIN	130
t_w Pulse duration, CLK high or low			MIN	3.3
t_{su} Setup time	A before CLK ↑		MIN	1.7
	B before $\overline{LE}$		MIN	1.3
	$\overline{CLKEN}$ before CLK ↑		MIN	1
t_h Hold time	A after CLK ↑		MIN	0.7
	B after $\overline{LE}$		MIN	1.1
	$\overline{CLKEN}$ after CLK ↑		MIN	0.9
t_{pd}	CLK	B	MAX	4.3
	B	A	MAX	4
	$\overline{LE}$			4.8
	$\overline{SEL}$			5.2
t_{en}	$\overline{OEB}$ or $\overline{OEA}$	B or A	MAX	5.1
t_{dis}	$\overline{OEB}$ or $\overline{OEA}$	B or A	MAX	4.2

UNIT fmax : MHz other : ns

PRODUCTION DATA information is current as of publication date. Products conform to specifications per the terms of Texas Instruments standard warranty. Production processing does not necessarily include testing of all parameters. See www.ti.com/sc/logic for the most current data sheets.

18-BIT TO 36-BIT REGISTERED BUS EXCHANGER WITH 3-STATE OUTPUTS

Logic Diagram

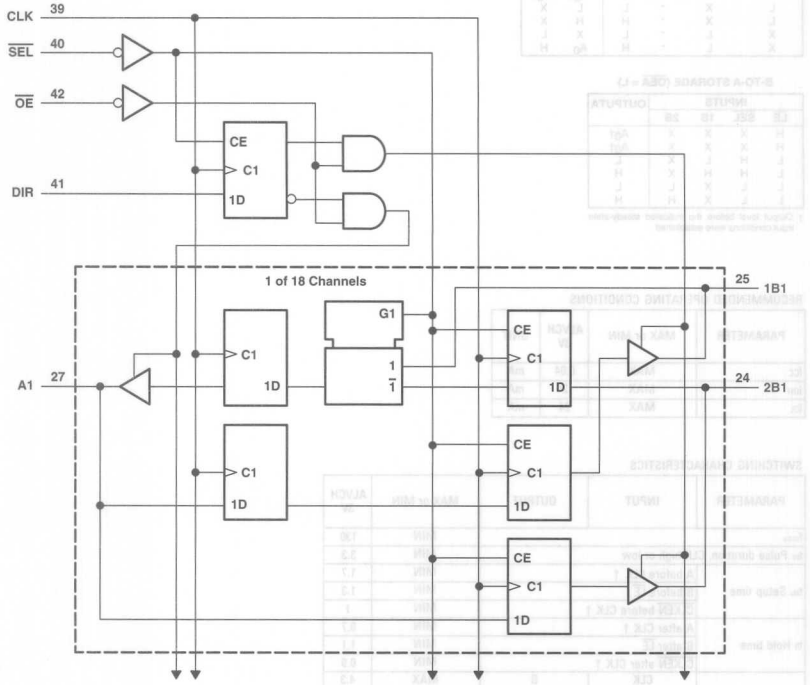

: OBSOLETED or NOT RECOMMENDED NEW DESIGNS

FUNCTION TABLE

A-TO-B STORAGE ($\overline{OE}$ = L, DIR = H)

INPUTS			OUTPUTS	
$\overline{SEL}$	CLK	A	1B	2B
H	X	X	$1B_0$†	$2B_0$†
L	↑	L	L‡	X
L	↑	H	H‡	X

† Output level before the indicated steady-state input conditions were established
‡ Two CLK edges are needed to propagate the data.

B-TO-A STORAGE ($\overline{OE}$ = L, DIR = L)

INPUTS				OUTPUT
CLK	$\overline{SEL}$	1B	2B	A
↑	H	X	L	L§
↑	H	X	H	H§
↑	L	L	X	L
↑	L	H	X	H

§ Two CLK edges are needed to propagate the data. The data is loaded in the first register when SEL is low and propagates to the second register when SEL is high.

OUTPUT ENABLE

INPUTS			OUTPUTS	
CLK	$\overline{OE}$	DIR	A	1B, 2B
↑	H	X	Z	Z
↑	L	L	Z	Active
↑	L	H	Active	Z

RECOMMENDED OPERATING CONDITIONS

PARAMETER	MAX or MIN	ALVCH 3V	UNIT
I_{CC}	MAX	0.04	mA
I_{OH}	MAX	-24	mA
I_{OL}	MAX	24	mA

SWITCHING CHARACTERISTICS

PARAMETER	INPUT	OUTPUT	MAX or MIN	ALVCH 3V
f_{max}			MIN	150
t_w Pulse duration, CLK high or low			MIN	3.3
t_{su} Setup time	A data before CLK ↑		MIN	2
	B data before CLK ↑		MIN	1.8
	DIR before CLK ↑		MIN	1.7
	$\overline{SEL}$ before CLK ↑		MIN	1.8
t_h Hold time	A data after CLK ↑		MIN	0.7
	B data after CLK ↑		MIN	0.6
	DIR after CLK ↑		MIN	0.5
	$\overline{SEL}$ after CLK ↑		MIN	0.8
t_{pd}	CLK	A	MAX	5
		B		5.3
t_{en}	$\overline{OE}$	A	MAX	5.7
		B		7.4
t_{dis}	$\overline{OE}$	A	MAX	5.7
		B		6.4

UNIT fmax : MHz other : ns

16334

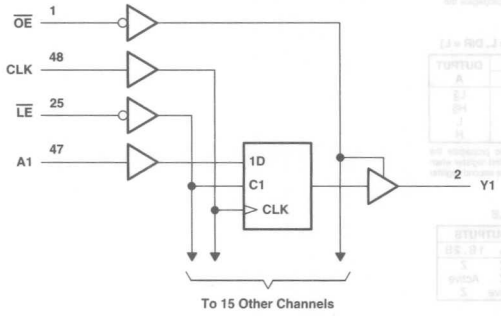
$\overline{OE}$ 1
CLK 48
$\overline{LE}$ 25
A1 47
1D
C1
CLK
2 Y1
To 15 Other Channels

FUNCTION TABLE

INPUTS				OUTPUT
$\overline{OE}$	$\overline{LE}$	CLK	A	Y
H	X	X	X	Z
L	L	X	L	L
L	L	X	H	H
L	H	↑	L	L
L	H	↑	H	H
L	H	L or H	X	Y_0↑

↑ Output level before the indicated steady-state input conditions were established

RECOMMENDED OPERATING CONDITIONS

PARAMETER	MAX or MIN	ALVC 3V	ALVCH 3V	AVC 3V	UNIT
I_{CC}	MAX	0.04	0.04	0.04	mA
I_{OH}	MAX	-24	-24	-12	mA
I_{OL}	MAX	24	24	12	mA

SWITCHING CHARACTERISTICS

PARAMETER	INPUT	OUTPUT	MAX or MIN	ALVC 3V	ALVCH 3V	AVC 3V
f_{max}			MIN	150	150	150
t_w Pulse duration	$\overline{LE}$ low			3.3	3.3	3.3
	CLK high or low		MIN	3.3	3.3	3.3
t_{su} Setup time	Data before CLK ↑		MIN	1.5	1.5	0.7
	Data before $\overline{LE}$ ↑ CLK high		MIN	1.3	1.3	0.9
	Data before $\overline{LE}$ ↑ CLK low		MIN	1.2	1.2	1
t_h Hold time	Data after CLK ↑		MIN	0.9	0.9	0.7
	Data after $\overline{LE}$ ↑ CLK high		MIN	1.1	1.1	1.5
	Data after $\overline{LE}$ ↑ CLK low		MIN	1.1	1.1	1.3
t_{pd}	A	Y	MAX	3.3	3.3	2.5
	$\overline{LE}$			4.4	4.4	4
	CLK		MAX	4.1	4.1	3.1
t_{en}	$\overline{OE}$	Y		4.6	4.6	6.2
t_{dis}	$\overline{OE}$	Y	MAX	4.4	4.4	5.3

UNIT fmax : MHz other : ns

16344

1-BIT TO 4-BIT ADDRESS DRIVER WITH 3-STATE OUTPUTS

Logic Diagram

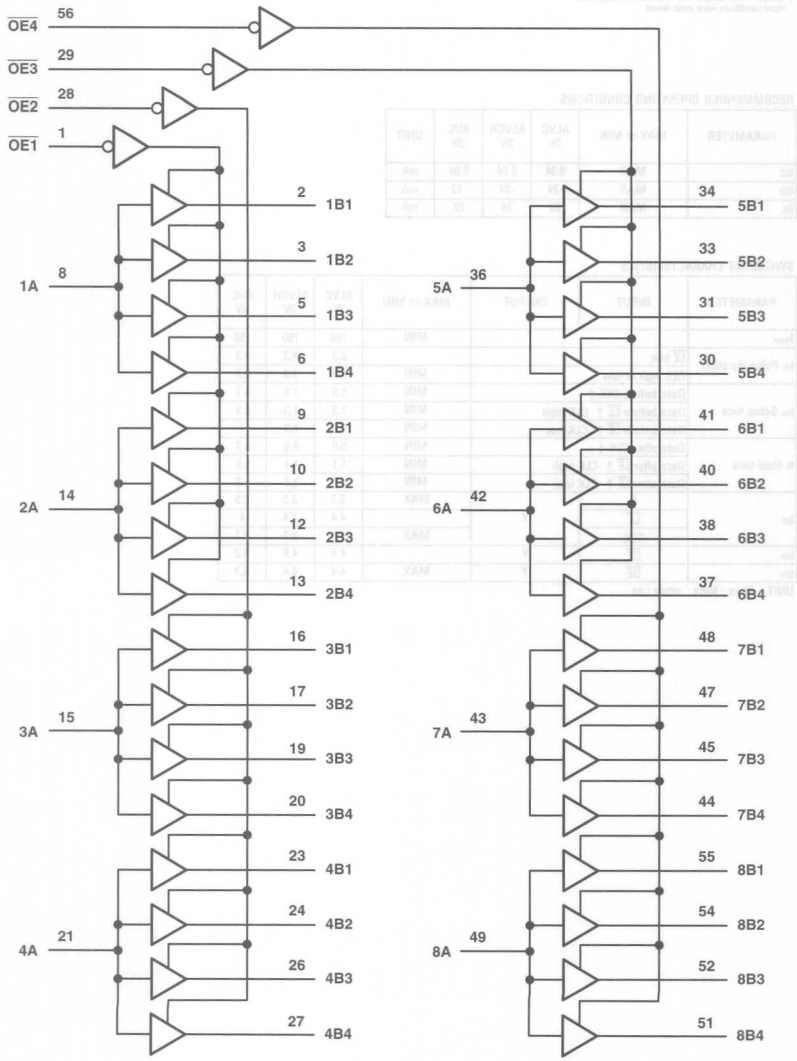

: OBSOLETED or NOT RECOMMENDED NEW DESIGNS

FUNCTION TABLE

INPUTS		OUTPUT
$\overline{OE}$	A	Bn
L	H	H
L	L	L
H	H	Z

RECOMMENDED OPERATING CONDITIONS

PARAMETER	MAX or MIN	ALVCH 3V	UNIT
I_{CC}	MAX	0.04	mA
I_{OH}	MAX	-24	mA
I_{OL}	MAX	24	mA

SWITCHING CHARACTERISTICS

PARAMETER	INPUT	OUTPUT	MAX or MIN	ALVCH 3V
t_{PLH}	A	B	MAX	4
t_{PHL}				4
t_{PZH}	$\overline{OE}$	B	MAX	5.1
t_{PZL}				5.1
t_{PHZ}	$\overline{OE}$	B	MAX	4
t_{PLZ}				4

UNIT: ns

16-BIT TRANSPARENT LATCHES WITH 3-STATE OUTPUTS

Logic Diagram

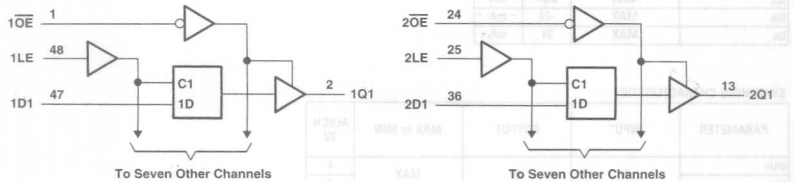

RECOMMENDED OPERATING CONDITIONS

PARAMETER	MAX or MIN	ABT	LVTH 3V	ALVTH 3V	AC	ACT	AHC	AHCT	LVC 3V	LVCH 3V	ALVCH 3V	AVC 3V	UNIT
I_{CC}	MAX	85	5	5	0.08	0.08	0.04	0.04	0.02	0.02	0.04	0.04	mA
I_{OH}	MAX	-32	-32	-32	-24	-24	-8	-8	-24	-24	-24	-12	mA
I_{OL}	MAX	64	64	64	24	24	8	8	24	24	24	12	mA

SWITCHING CHARACTERISTICS

PARAMETER	INPUT	OUTPUT	MAX or MIN	ABT	LVTH 3V	ALVTH 3V	AC	ACT	AHC	AHCT
t_w Pulse duration, LE high or low			MIN	3.3	3	1.5	4	1	5	6.5
t_{su} Setup time	Data before LE ↓, data high		MIN	1.5	1	1.4	1.5	1	4	1.5
	Data before LE ↓, data low		MIN	1.5	1	0.9	1.5	1	4	1.5
t_h Hold time	Data after LE ↓, data high		MIN	1	1	0.9	2.4	5	1	3.5
	Data after LE ↓, data low		MIN	1	1	1.4	2.4	5	1	3.5
t_{PLH}	D	Q	MAX	6.3	3.8	3.1	9.7	11.1	10.5	10.5
t_{PHL}				6.2	3.6	3.3	10.1	12.3	10.5	10.5
t_{PLH}	LE	Q	MAX	6.7	4.3	3.3	11.9	12.8	10.5	10.5
t_{PHL}				6.1	4	3.5	10.9	12.2	10.5	10.5
t_{PZH}	$\overline{OE}$	Q	MAX	6.1	4.3	4	10.8	12.1	11.5	11.5
t_{PZL}				5.6	4.3	3.4	12.8	14.2	11.5	11.5
t_{PHZ}	$\overline{OE}$	Q	MAX	8.1	5	4.9	8.8	10.7	11.5	12
t_{PLZ}				6.5	4.7	4.5	8.1	9.4	11.5	12

PARAMETER	INPUT	OUTPUT	MAX or MIN	LVC 3V	LVCH 3V	ALVCH 3V	AVC 3V
t_w Pulse duration, LE high or low			MIN	3.3	3.3	3.3	1.8
t_{su} Setup time	Data before LE ↓, data high		MIN	1.7	1.7	1.1	0.8
	Data before LE ↓, data low		MIN	1.7	1.7	1.1	0.8
t_h Hold time	Data after LE ↓, data high		MIN	1.2	1.2	1.4	1
	Data after LE ↓, data low		MIN	1.2	1.2	1.4	1
t_{PLH}	D	Q	MAX	4.2	4.2	3.6	2.8
t_{PHL}				4.2	4.2	3.6	2.8
t_{PLH}	LE	Q	MAX	4.6	4.6	3.9	3.2
t_{PHL}				4.6	4.6	3.9	3.2
t_{PZH}	$\overline{OE}$	Q	MAX	4.7	4.7	4.7	3.4
t_{PZL}				4.7	4.7	4.7	3.4
t_{PHZ}	$\overline{OE}$	Q	MAX	5.9	5.9	4.1	3.9
t_{PLZ}				5.9	5.9	4.1	3.9

UNIT: ns

16-BIT EDGE-TRIGGERD D-TYPE FLIP-FLOPS WITH 3-STATE OUTPUTS

Logic Diagram

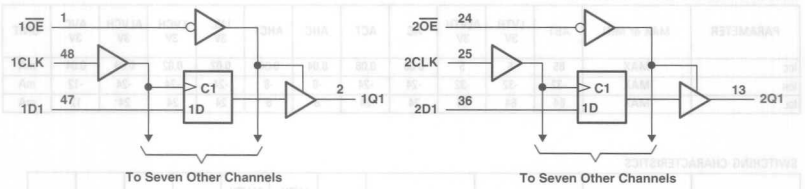

: OBSOLETED or NOT RECOMMENDED NEW DESIGNS

FUNCTION TABLE
(each flip-flop)

INPUTS			OUTPUT
$\overline{OE}$	CLK	D	Q
L	↑	H	H
L	↑	L	L
L	H or L	X	Q_0
H	X	X	Z

RECOMMENDED OPERATING CONDITIONS

PARAMETER	MAX or MIN	ABT	LVTH 3V	ALVTH 3V	AC	ACT	AHC	AHCT	LVC 3V	LVCH 3V	ALVCH 3V	AVC 3V	UNIT
I_{CC}	MAX	72	5	5	0.08	0.08	0.04	0.04	0.02	0.02	0.04	0.04	mA
I_{OH}	MAX	-32	-32	-32	-24	-24	-8	-8	-24	-24	-24	-12	mA
I_{OL}	MAX	64	64	64	24	24	8	8	24	24	24	12	mA

SWITCHING CHARACTERISTICS

PARAMETER	INPUT	OUTPUT	MAX or MIN	ABT	LVTH 3V	ALVTH 3V	AC	ACT	AHC	AHCT
f_{max}			MIN	150	160	250	100	65	110	110
t_w Pulse duration	CLK high		MIN	3.3	3	1.5	5	7.5	5	6.5
	CLK low			3.3	3	1.5	5	4.5	5	6.5
t_{su} Setup time	Data before CLK ↑, data high		MIN	1.1	1.8	1	5	4.5	3	2.5
	Data before CLK ↑, data low			1.1	1.8	1.5	5	4.5	3	2.5
t_h Hold time	Data after CLK ↑, data high		MIN	1.3	0.8	0.5	0	6.5	2	2.5
	Data after CLK ↑, data low			1.3	0.8	1	0	6.5	2	2.5
t_{PLH}	CLK	Q	MAX	6.2	4.5	3.2	10.8	12.4	11.5	11.5
t_{PHL}				5.9	4	3.2	10.6	12.2	11.5	11.5
t_{PZH}	$\overline{OE}$	Q	MAX	5.6	4.5	3.8	10.2	11.9	11.5	11.5
t_{PZL}				5.3	4.4	3.3	12.1	13.4	11.5	11.5
t_{PHZ}	$\overline{OE}$	Q	MAX	8.2	5	4.6	8.2	10.4	11.5	12
t_{PLZ}				6.6	4.6	4.2	7.9	9.8	11.5	12

PARAMETER	INPUT	OUTPUT	MAX or MIN	LVC 3V	LVCH 3V	ALVCH 3V	AVC 3V
f_{max}			MIN	150	150	150	200
t_w Pulse duration	CLK high		MIN	3.3	3.3	3.3	2.5
	CLK low			3.3	3.3	3.3	2.5
t_{su} Setup time	Data before CLK ↑, data high		MIN	1.9	1.9	1.9	1.4
	Data before CLK ↑, data low			1.9	1.9	1.9	1.4
t_h Hold time	Data after CLK ↑, data high		MIN	1.9	1.1	0.5	1.1
	Data after CLK ↑, data low			1.9	1.1	0.5	1.1
t_{PLH}	CLK	Q	MAX	4.5	4.5	4.2	3.3
t_{PHL}				4.5	4.5	4.2	3.3
t_{PZH}	$\overline{OE}$	Q	MAX	4.6	4.6	4.8	3.4
t_{PZL}				4.6	4.6	4.8	3.4
t_{PHZ}	$\overline{OE}$	Q	MAX	5.5	5.5	4.3	3.9
t_{PLZ}				5.5	5.5	4.3	3.9

UNIT fmax : MHz other : ns

Logic Diagram

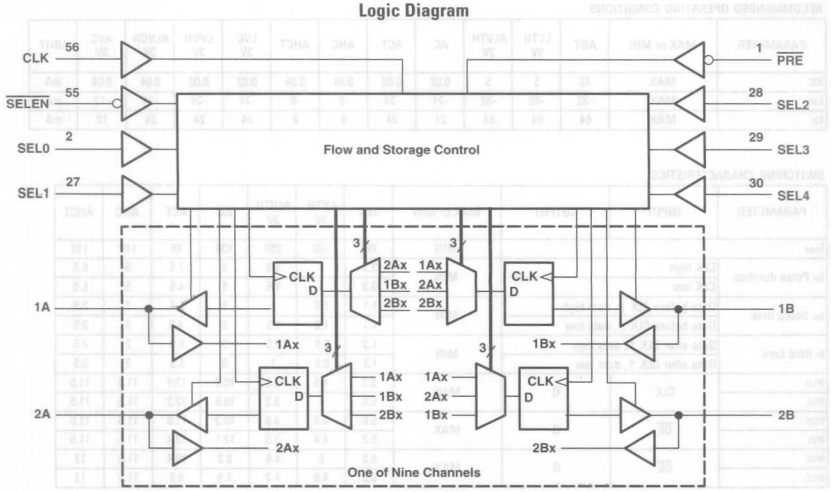

: OBSOLETED or NOT RECOMMENDED NEW DESIGNS

FUNCTION TABLE

L	X	B_0†

† Output level before the indicated steady-state input conditions were established

DATA-FLOW CONTROL

L	L	↑	0	0	1	0	0	Not used
L	L	↑	0	0	1	0	1	Not used
L	L	↑	0	0	1	1	0	Not used
L	L	↑	0	0	1	1	1	Not used
L	L	↑	0	1	0	0	0	2A to 1A and 1B to 2B
L	L	↑	0	1	0	0	1	2A to 1A
L	L	↑	0	1	0	1	0	2B to 1B
L	L	↑	0	1	0	1	1	2A to 1A and 2B to 1B
L	L	↑	0	1	1	0	0	1A to 2A and 1B to 2B
L	L	↑	0	1	1	0	1	1A to 2A
L	L	↑	0	1	1	1	0	1B to 2B
L	L	↑	0	1	1	1	1	1A to 2A and 2B to 1B
L	L	↑	1	0	0	0	0	1A to 1B and 2B to 2A
L	L	↑	1	0	0	0	1	1A to 1B
L	L	↑	1	0	0	1	0	2A to 2B
L	L	↑	1	0	0	1	1	1A to 1B and 2A to 2B
L	L	↑	1	0	1	0	0	1B to 1A and 2A to 2B
L	L	↑	1	0	1	0	1	1B to 1A
L	L	↑	1	0	1	1	0	2B to 2A
L	L	↑	1	0	1	1	1	1B to 1A and 2B to 2A
L	L	↑	1	1	0	0	0	2B to 1A and 2A to 1B
L	L	↑	1	1	0	0	1	1B to 2A
L	L	↑	1	1	0	1	0	2B to 1A
L	L	↑	1	1	0	1	1	2B to 1A and 1B to 2A
L	L	↑	1	1	1	0	0	1A to 2B and 1B to 2A
L	L	↑	1	1	1	0	1	1A to 2B
L	L	↑	1	1	1	1	0	2A to 1B
L	L	↑	1	1	1	1	1	1A to 2B and 2A to 1B

RECOMMENDED OPERATING CONDITIONS

PARAMETER	MAX or MIN	ALVCH 3V	ALVC HR 3V	UNIT
I_{CC}	MAX	0.04	0.04	mA
I_{OH}	MAX	-24	-12	mA
I_{OL}	MAX	24	12	mA

SWITCHING CHARACTERISTICS

PARAMETER	INPUT	OUTPUT	MAX or MIN	ALVCH 3V	ALVC HR 3V
f_{max}			MIN	120	120
t_w Pulse duration, CLK high or low			MIN	3	3
t_{su} Setup time	A or B data before CLK ↑		MIN	1.4	1.4
	SEL before CLK ↑		MIN	3.5	3.5
	$\overline{SELEN}$ before CLK ↑		MIN	1.8	1.8
	$\overline{PRE}$ before CLK ↑		MIN	0.7	0.7
t_h Hold time	A or B data after CLK ↑		MIN	1	1
	SEL after CLK ↑		MIN	0	0
	$\overline{SELEN}$ after CLK ↑		MIN	0.8	0.8
t_{pd}	CLK	A or B	MAX	5.1	6.2
t_{en}	CLK	A or B	MAX	5.7	6.8
t_{dis}	$\overline{PRE}$	A or B	MAX	5.7	6.1
				6.1	6.4

UNIT fmax : MHz other : ns

PRODUCTION DATA information is current as of publication date. Products conform to specifications per the terms of Texas Instruments standard warranty. Production processing does not necessarily include testing of all parameters. See www.ti.com/sc/logic for the most current data sheets.

4-TO-1 MULTIPLEXED/DEMULTIPLEXED TRANSCEIVERS WITH 3-STATE OUTPUTS

Logic Diagram

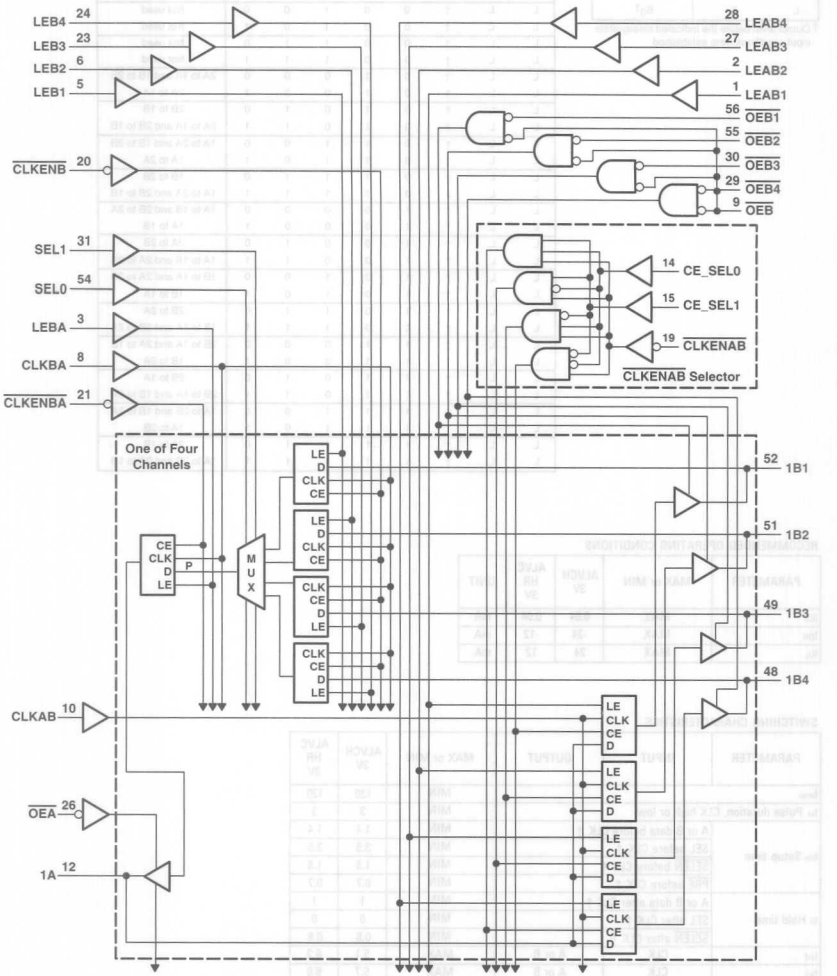

: OBSOLETED or NOT RECOMMENDED NEW DESIGNS

FUNCTION TABLE

A-TO-B OUTPUT ENABLE

INPUTS		OUTPUT
OEB	OEBn	Bn
H	H	Z
H	L	Z
L	H	Z
L	L	Active

†n = 1, 2, 3, 4

A-TO-B OUTPUT ENABLE
(assuming $\overline{OEB}$ = L, $\overline{OEBn}$ = L) ‡

INPUTS								OUTPUTS			
CLKENAB	CE_SEL1	CE_SEL0	CLKAB	LEAB1	LEAB2	LEAB3	LEAB4	B1	B2	B3	B4
X	X	X	H or L	H	L	L	L	A	A_0	A_0	A_0
X	X	X	H or L	H	H	H	L	A	A	A	A_0
L	X	X	L	L	L	L	L	A_0	A_0	A_0	A_0
L	L	L	↑	L	L	L	L	A	A_0	A_0	A_0
L	L	H	↑	L	L	L	L	A_0	A	A_0	A_0
L	H	L	↑	L	L	L	L	A_0	A_0	A	A_0
L	H	H	↑	L	L	L	L	A_0	A_0	A_0	A
H	X	X	↑	L	L	L	L	A_0	A_0	A_0	A_0

B-TO-A STORAGE
(after point P)

INPUTS								P
CLKENB	CLKBA	LEB1	LEB2	LEB3	LEB4	SEL1	SEL0	
X	X	H	L	L	L	L	L	B1
X	X	L	H	L	L	L	H	B2
X	X	L	L	H	L	H	L	B3
X	X	L	L	L	H	H	H	B4
L	↑	L	L	L	L	L	L	B1
						L	H	B2
						H	L	B3
						H	H	B4
L	L	L	L	L	L	L	L	$B1_0$†
						L	H	$B2_0$†
						H	L	$B3_0$†
						H	H	$B4_0$†

‡ Output level before the indicated steady-state input conditions were established

B-TO-A STORAGE
(after point P)

INPUTS					OUTPUT
CLKENBA	CLKBA	LEBA	OEA	B	A
X	X	X	H	X	Z
X	X	H	L	L	L
X	X	H	L	H	H
H	X	L	L	X	A_0†
L	↑	L	L	L	L
L	↑	L	L	H	H
L	L	L	L	X	A_0†

RECOMMENDED OPERATING CONDITIONS

PARAMETER	MAX or MIN	ABTH	UNIT
I_{CC}	MAX	32	mA
I_{OH}	MAX	-32	mA
I_{OL}	MAX	64	mA

SWITCHING CHARACTERISTICS

PARAMETER			MAX or MIN	ABTH
f_{max}			MIN	160
t_w Pulse duration	CLKAB high or low		MIN	3.8
	CLKBA high or low		MIN	4.5
	LEAB1, 2, 3 or 4 high		MIN	2.2
	LEBA high		MIN	2.1
	LEB1, 2, 3 or 4 high		MIN	2.4
t_{su} Setup time	Before CLKAB ↑	A bus	MIN	2.5
		$\overline{CE\_SEL0/1}$	MIN	3.2
		$\overline{CLKENAB}$	MIN	3.2
	Before LEAB1, 2, 3, or 4 ↓	A bus	MIN	3.6
	Before CLKBA ↑	B bus	MIN	3.8
		$\overline{CLKENB}$	MIN	2.3
		$\overline{CLKENBA}$	MIN	2.5
		LEB1, 2, 3 or 4	MIN	4.3
		SEL0/1	MIN	4.5
	Before LEB1, 2, 3, or 4 ↓	B bus	MIN	3.2
	Before CLKBA ↑	B bus	MIN	4
		LEB1, 2, 3 or 4	MIN	4.4
		SEL0/1	MIN	4.3
t_h Hold time	after CLKAB ↑	A bus	MIN	0.5
		$\overline{CE\_SEL0/1}$	MIN	1.1
		$\overline{CLKENAB}$	MIN	0.5
	after LEAB1, 2, 3, or 4 ↓	A bus	MIN	1.2
	after CLKBA ↑	B bus	MIN	1.3
		$\overline{CLKENB}$	MIN	1
		$\overline{CLKENBA}$	MIN	1
		SEL0/1	MIN	0
	after LEB1, 2, 3, or 4 ↓	B bus	MIN	1.5
	after CLKBA ↑	B bus	MIN	0.4
		SEL0/1	MIN	0.1

PARAMETER	INPUT	OUTPUT	MAX or MIN	ABTH
t_{PLH}	B	A	MAX	6.5
t_{PHL}				6.5
t_{PZH}	$\overline{OEA}$	A	MAX	5.6
t_{PZL}				5.2
t_{PHZ}	$\overline{OEA}$	A	MAX	5.9
t_{PLZ}				6.5
t_{PLH}	A	B	MAX	5.7
t_{PHL}				5.7
t_{PZH}	$\overline{OEB}$	B	MAX	6.4
t_{PZL}				6.3
t_{PHZ}	$\overline{OEB}$	B	MAX	7
t_{PLZ}				6.1
t_{PZH}	$\overline{OEB1}$, $\overline{2}$, $\overline{3}$, $\overline{4}$	B	MAX	5.8
t_{PZL}				5.6
t_{PHZ}	$\overline{OEB1}$, $\overline{2}$, $\overline{3}$, $\overline{4}$	B	MAX	6.1
t_{PLZ}				5.3
t_{PLH}	CLKBA	A	MAX	7.4
t_{PHL}				7.7
t_{PLH}	CLKAB	B	MAX	6.2
t_{PHL}				5.9
t_{PLH}	LEBA	A	MAX	5.6
t_{PHL}				5.3
t_{PLH}	LEAB1, 2, 3, 4	B	MAX	5.8
t_{PHL}				5.6
t_{PLH}	LEBA1, 2, 3, 4	A	MAX	7.2
t_{PHL}				6.8
t_{PLH}	SEL	A	MAX	7.5
t_{PHL}				6.9

UNIT fmax : MHz other : ns

PRODUCTION DATA information is current as of publication date. Products conform to specifications per the terms of Texas Instruments standard warranty. Production processing does not necessarily include testing of all parameters. See www.ti.com/sc/logic for the most current data sheets.

Logic Diagram

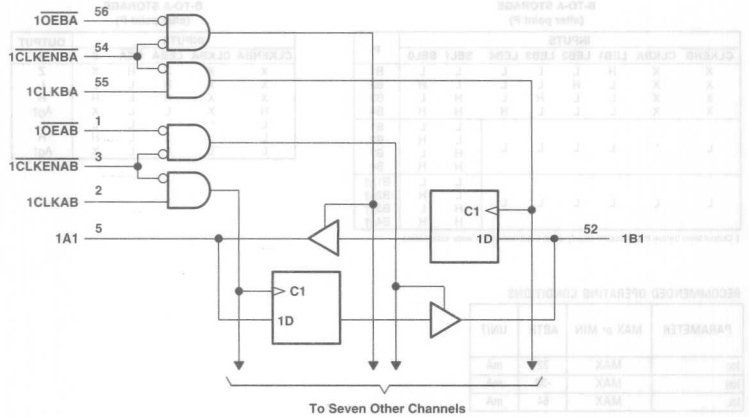

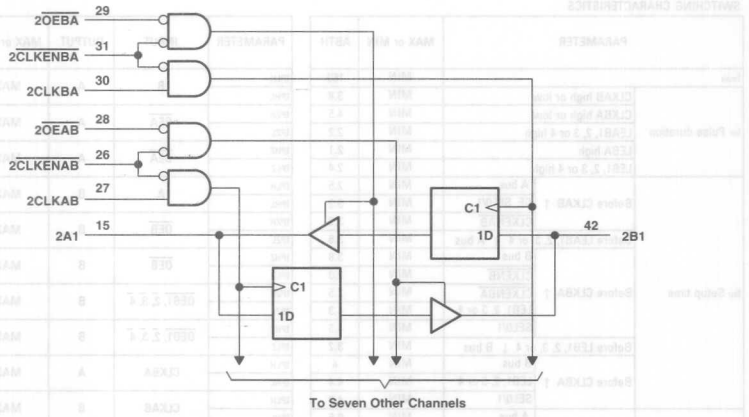

FUNCTION TABLE

INPUTS				OUTPUT
$\overline{CLKENAB}$	CLKAB	$\overline{OEAB}$	A	B
H	X	X	X	Z
X	X	H	X	Z
L	L	L	X	B_0‡
L	↑	L	L	L
L	↑	L	H	H

† A-to-B data flow is shown: B-to-A flow is similar but uses $\overline{CLKENBA}$, CLKBA, and $\overline{OEBA}$.
‡ Output level before the indicated steady-state input conditions were established.

RECOMMENDED OPERATING CONDITIONS

PARAMETER	MAX or MIN	ABT	ACT	UNIT
I_{CC}	MAX	35	0.08	mA
I_{OH}	MAX	-32	-24	mA
I_{OL}	MAX	64	24	mA

SWITCHING CHARACTERISTICS

PARAMETER	INPUT	OUTPUT	MAX or MIN	ABT	ACT
f_{max}			MIN	150	55
t_w Pulse duration, CLKAB or CLKBA high			MIN	3.3	4
t_w Pulse duration, CLKAB or CLKBA low				3.3	8.5
t_{su} Setup time, data before CLKAB ↑ or CLKBA ↑			MIN	4	6
t_h Hold time, data after CLKAB ↑ or CLKBA ↑			MIN	1	1
t_{PLH}	CLK	A or B	MAX	4.9	11.8
t_{PHL}				4.9	11.7
t_{PZH}	$\overline{OE}$	A or B	MAX	4.9	11.9
t_{PZL}				6.8	13.4
t_{PHZ}	$\overline{OE}$	A or B	MAX	5.5	9.9
t_{PLZ}				5.3	9.5
t_{PZH}	$\overline{CLKEN}$	A or B	MAX	5.7	12.5
t_{PZL}				7.2	14.3
t_{PHZ}	$\overline{CLKEN}$	A or B	MAX	5.8	11.2
t_{PLZ}				5.4	10.9

UNIT fmax : MHz other : ns

Logic Diagram

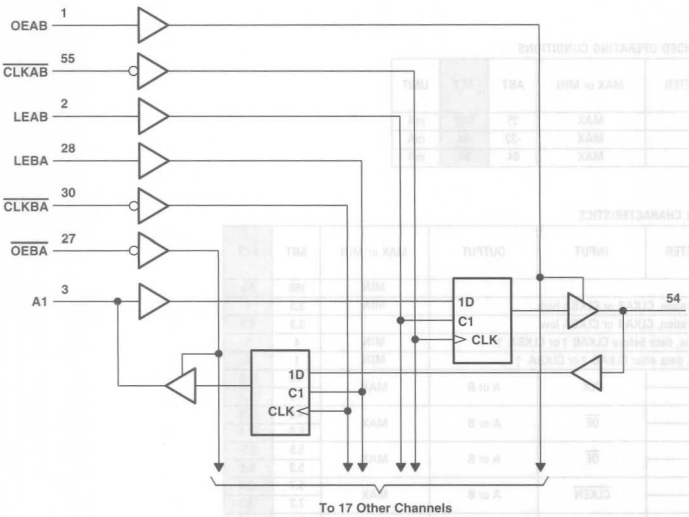

: OBSOLETED or NOT RECOMMENDED NEW DESIGNS

FUNCTION TABLE

INPUTS				OUTPUT
OEAB	LEAB	$\overline{CLKAB}$	A	B
L	X	X	X	Z
H	H	X	L	L
H	H	X	H	H
H	L	↓	L	L
H	L	↓	H	H
H	L	H	X	B_0‡
H	L	L	X	B_0§

† A-to-B data flow is shown: B-to-A flow is similar but uses $\overline{OEBA}$, LEBA, and $\overline{CLKBA}$.
‡ Output level befor the indicated steady-state input conditions were established.
§ Output level before the indicated steady-state input conditions were established, provided that $\overline{CLKAB}$ was low before LEAB went low.

RECOMMENDED OPERATING CONDITIONS

PARAMETER	MAX or MIN	ABT	LVTH 3V	ALVCH 3V	UNIT
I_{CC}	MAX	36	5	0.04	mA
I_{OH}	MAX	-32	-32	-24	mA
I_{OL}	MAX	64	64	24	mA

SWITCHING CHARACTERISTICS

PARAMETER	INPUT	OUTPUT	MAX or MIN	ABT	LVTH 3V	ALVCH 3V
f_{max}			MIN	150	150	150
t_w Pulse duration	LEAB or LEBA high		MIN	2.5	3.3	3.3
	$\overline{CLKAB}$ or $\overline{CLKBA}$ high or low			3	3.3	3.3
t_{su} Setup time	A before $\overline{CLKAB}$ ↓		MIN	3	2.9	1.3
	B before $\overline{CLKBA}$ ↓			3	2.9	1.3
	A before LEAB ↓ or LEBA ↓ $\overline{CLK}$ high			1	1.4	1
	A before LEAB ↓ or LEBA ↓ $\overline{CLK}$ low			2.5	2.9	1.4
t_h Hold time	A after $\overline{CLKAB}$ ↓ or B after $\overline{CLKBA}$ ↓		MIN	0	0.4	1.3
	A after LEAB ↓ or B after LEBA ↓ high			2	1.6	1.5
	A after LEAB ↓ or B after LEBA ↓ low			2	1.6	1.2
t_{PLH}	A or B	B or A	MAX	4	3.7	3.9
t_{PHL}				4.9	3.7	3.9
t_{PZH}	LEAB or LEBA	B or A	MAX	5	5.1	4.7
t_{PZL}				5	5.1	4.7
t_{PHZ}	$\overline{CLKAB}$ or $\overline{CLKBA}$	B or A	MAX	5.3	5	5.5
t_{PLZ}				5.3	5	5.5
t_{PZH}	OEAB	B	MAX	5.1	4.8	4.6
t_{PZL}				5.4	4.8	4.6
t_{PHZ}	OEAB	B	MAX	6.5	5.8	5
t_{PLZ}				5.4	5.8	5
t_{PZH}	$\overline{OEBA}$	A	MAX	5.1	4.8	5.2
t_{PZL}				5.4	4.8	5.2
t_{PHZ}	$\overline{OEBA}$	A	MAX	6.5	5.8	4.3
t_{PLZ}				5.4	5.8	4.3

UNIT fmax : MHz other : ns

Logic Diagram

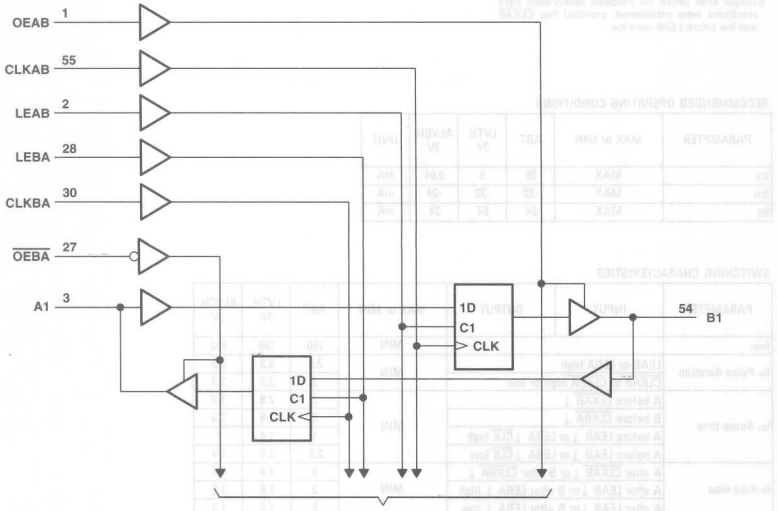

: OBSOLETED or NOT RECOMMENDED NEW DESIGNS

FUNCTION TABLE

† A-to-B data flow is shown: B-to-A flow is similar but uses $\overline{OEBA}$, LEBA, and CLKBA.
‡ Output level before the indicated steady-state input conditions were established, provided that CLKAB was high before LEAB went low.
§ Output level before the indicated steady-state input conditions were established.

RECOMMENDED OPERATING CONDITIONS

PARAMETER	MAX or MIN	ABT	LVTH 3V	ALVCH 3V	UNIT
I_{CC}	MAX	76	5	0.04	mA
I_{OH}	MAX	-32	-32	-24	mA
I_{OL}	MAX	64	64	24	mA

SWITCHING CHARACTERISTICS

PARAMETER	INPUT	OUTPUT	MAX or MIN	ABT	LVTH 3V	ALVCH 3V
f_{max}			MIN	105	150	150
t_w Pulse duration	LEAB or LEBA high		MIN	3.3	3.3	3.3
	CLKAB or CLKBA high or low		MIN	4.7	3.3	3.3
t_{su} Setup time	A before CLKAB ↑		MIN	3.5	2.1	1.7
	B before CLKBA ↑		MIN	3.5	2.1	1.7
	A before LEAB ↓or LEBA ↓CLK high		MIN	4	2.4	1.5
	A before LEAB ↓or LEBA ↓CLK low		MIN	1.5	1.4	1
t_h Hold time	A after CLKAB ↑or B after CLKBA ↑		MIN	1	1	0.7
	A after LEAB ↓or B after LEBA ↓		MIN	2.5	1.7	1.4
t_{PLH}	A or B	B or A	MAX	3.7	3.7	3.9
t_{PHL}				4	3.7	3.9
t_{PZH}	LEAB or LEBA	B or A	MAX	5.1	5.1	4.6
t_{PZL}				4.4	5.1	4.6
t_{PHZ}	CLKAB or CLKBA	B or A	MAX	5	5.1	4.9
t_{PLZ}				4.4	5.1	4.9
t_{PZH}	OEAB	B	MAX	4.7	4.8	4.6
t_{PZL}				6.5	4.8	4.6
t_{PHZ}	OEAB	B	MAX	5.8	5.8	5
t_{PLZ}				4.9	5.8	5
t_{PZH}	$\overline{OEBA}$	A	MAX	4.7	4.8	5
t_{PZL}				6.5	4.8	5
t_{PHZ}	$\overline{OEBA}$	A	MAX	5.8	5.8	4.2
t_{PLZ}				4.9	5.8	4.2

UNIT fmax : MHz other : ns

18-BIT REGISTERED BUS TRANSCEIVER WITH 3-STATE OUTPUTS

Logic Diagram

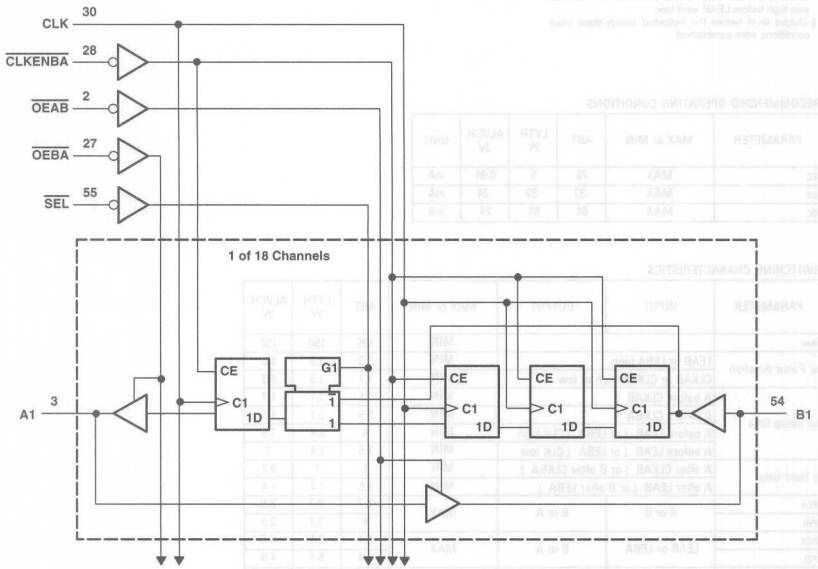

: OBSOLETED or NOT RECOMMENDED NEW DESIGNS

FUNCTION TABLE

B-TO-A STORAGE ($\overline{OEBA}$ = L)

INPUTS				OUTPUT
$\overline{CLKENBA}$	CLK	SEL	B	A
H	X	X	X	A_0†
L	↑	H	L	L
L	↑	H	H	H
L	↑	L	L	L‡
L	↑	L	H	H‡

† Output level before the indicated steady-state input conditions were established

‡ Four positive CLK edges are needed to propagate data from B to A when $\overline{SEL}$ is low.

RECOMMENDED OPERATING CONDITIONS

PARAMETER	MAX or MIN	ALVCH 3V	UNIT
I_{CC}	MAX	0.04	mA
I_{OH}	MAX	-24	mA
I_{OL}	MAX	24	mA

SWITCHING CHARACTERISTICS

PARAMETER	INPUT	OUTPUT	MAX or MIN	ALVCH 3V
f_{max}			MIN	150
t_w Pulse duration, CLK high or low			MIN	3
t_{su} Setup time	B data before CLK ↑		MIN	1.1
	$\overline{SEL}$ before CLK ↑		MIN	2.1
	$\overline{CLKENBA}$ before CLK ↑		MIN	2
t_h Hold time	B data after CLK ↑		MIN	1.2
	$\overline{SEL}$ after CLK ↑		MIN	0.8
	$\overline{CLKENBA}$ after CLK ↑		MIN	0.3
t_{pd}	A	B	MAX	3.2
	CLK	A		5.2
t_{en}	$\overline{OEAB}$ or $\overline{OEBA}$	A or B	MAX	5.1
t_{dis}	$\overline{OEAB}$ or $\overline{OEBA}$	A or B		4.9

UNIT fmax : MHz other : ns

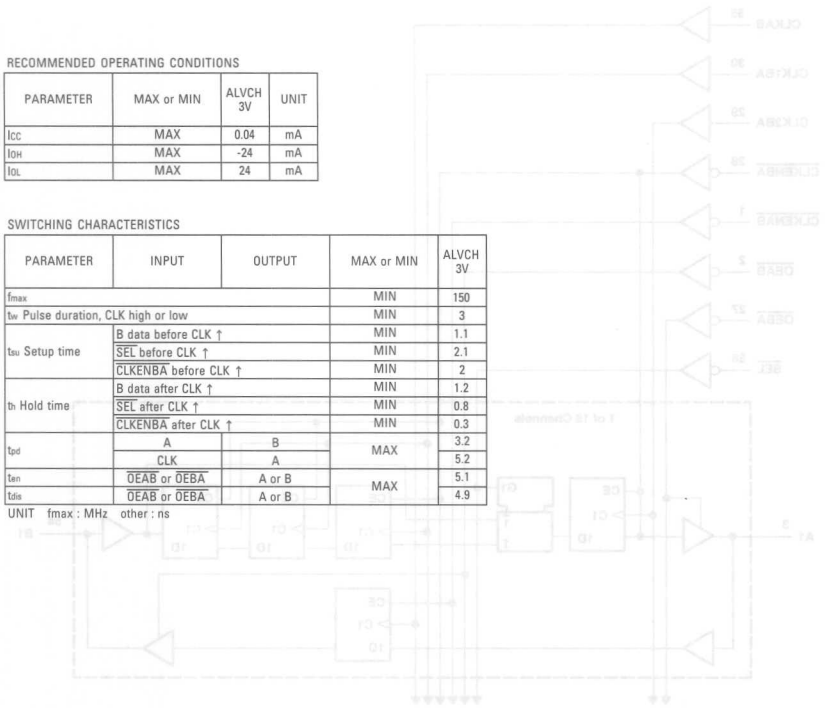

Logic Diagram

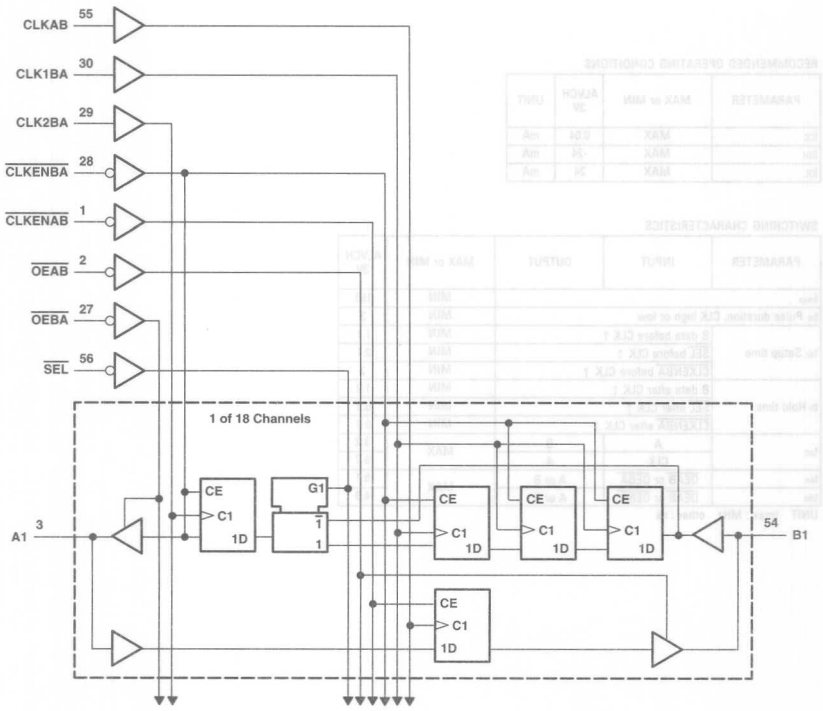

: OBSOLETED or NOT RECOMMENDED NEW DESIGNS

† Output level before the indicated steady-state input conditions were established

B-TO-A STORAGE ($\overline{OEBA}$ = L)

INPUTS					OUTPUT
$\overline{CLKENA}$	CLK2BA	CLK1BA	$\overline{SEL}$	B	A
H	X	X	X	X	A0†
L	↑	X	H	L	L
L	↑	X	H	H	H
L	↑	↑	L	L	L‡
L	↑	↑	L	H	H‡

† Output level before the indicated steady-state input conditions were established
‡ Three CLK1BA edges and one CLK2BA edge are needed to propagate data from B to A when $\overline{SEL}$ is low.

RECOMMENDED OPERATING CONDITIONS

PARAMETER	MAX or MIN	ALVCH 3V	UNIT
I_{CC}	MAX	0.04	mA
I_{OH}	MAX	-24	mA
I_{OL}	MAX	24	mA

SWITCHING CHARACTERISTICS

PARAMETER	INPUT	OUTPUT	MAX or MIN	ALVCH 3V
f_{max}			MIN	150
t_w Pulse duration, CLK high or low			MIN	3
t_{su} Setup time	A data before CLKAB ↑		MIN	1.3
	B data before CLK2BA ↑		MIN	1.7
	B data before CLK1BA ↑		MIN	1.1
	$\overline{SEL}$ before CLK2BA ↑		MIN	3.3
	$\overline{CLKENAB}$ before CLKAB ↑		MIN	1.6
	$\overline{CLKENBA}$ before CLK1BA ↑		MIN	2.1
	$\overline{CLKENBA}$ before CLK2BA ↑		MIN	2.2
t_h Hold time	A data after CLKAB ↑		MIN	0.9
	B data after CLK2BA ↑		MIN	0.6
	B data after CLK1BA ↑		MIN	1
	$\overline{SEL}$ after CLK2BA ↑		MIN	0.1
	$\overline{CLKENAB}$ after CLKAB ↑		MIN	0.3
	$\overline{CLKENBA}$ after CLK1BA ↑		MIN	0.1
	$\overline{CLKENBA}$ after CLK2BA ↑		MIN	0
t_{pd}	CLKAB or CLK2BA	A or B	MAX	4.2
t_{en}	$\overline{OEAB}$ or $\overline{OEBA}$	A or B	MAX	5.1
t_{dis}	$\overline{OEAB}$ or $\overline{OEBA}$	A or B	MAX	4.9

UNIT fmax : MHz other : ns

16540

16-BIT BUFFERS/DRIVERS WITH 3-STATE OUTPUTS

Logic Diagram

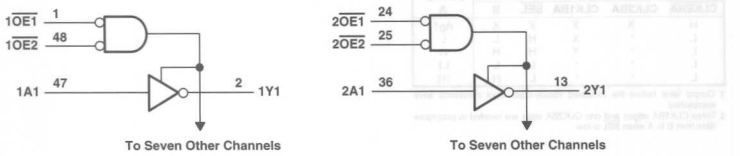

FUNCTION TABLE
(each 8-bit section)

INPUTS			OUTPUT
$\overline{OE1}$	$\overline{OE2}$	A	Y
L	L	L	H
L	L	H	L
H	X	X	Z
X	H	X	Z

RECOMMENDED OPERATING CONDITIONS

PARAMETER	MAX or MIN	ABT	ACT	AHC	AHCT	LVCH 3V	UNIT
I_{CC}	MAX	34	0.08	0.04	0.04	0.02	mA
I_{OH}	MAX	-32	-24	-8	-8	-24	mA
I_{OL}	MAX	64	24	8	8	24	mA

SWITCHING CHARACTERISTICS

PARAMETER	INPUT	OUTPUT	MAX or MIN	ABT	ACT	AHC	AHCT	LVCH 3V
t_{PLH}	A	Y	MAX	4.1	7.5	8.5	10.5	3.7
t_{PHL}				4.3	9.5	8.5	10.5	3.7
t_{PZH}	$\overline{OE}$	Y	MAX	5.1	8.9	10.5	13	4.8
t_{PZL}				5.9	10.5	10.5	13	4.8
t_{PHZ}	$\overline{OE}$	Y	MAX	5.7	11.9	10.5	13	5.9
t_{PLZ}				4.7	11.1	10.5	13	5.9

UNIT: ns

: OBSOLETED or NOT RECOMMENDED NEW DESIGNS

16-BIT BUFFERS/DRIVERS WITH 3-STATE OUTPUTS

Logic Diagram

FUNCTION TABLE
(each 8-bit section)

INPUTS			OUTPUT
$\overline{OE1}$	$\overline{OE2}$	A	Y
L	L	L	L
L	L	H	H
H	X	X	Z
X	H	X	Z

RECOMMENDED OPERATING CONDITIONS

PARAMETER	MAX or MIN	ABT	LVTH 3V	ACT	AHC	AHCT	LVCH 3V	UNIT
I_{CC}	MAX	34	5	0.08	0.04	0.04	0.02	mA
I_{OH}	MAX	-32	-32	-24	-8	-8	-24	mA
I_{OL}	MAX	64	64	24	8	8	24	mA

SWITCHING CHARACTERISTICS

PARAMETER	INPUT	OUTPUT	MAX or MIN	ABT	LVTH 3V	ACT	AHC	AHCT	LVCH 3V
t_{PLH}	A	Y	MAX	3.4	3.5	9	8.5	10.5	4.2
t_{PHL}				4.2	3.5	9.2	8.5	10.5	4.2
t_{PZH}	$\overline{OE}$	Y	MAX	5.2	4.6	9.7	10.5	13	5.6
t_{PZL}				6	4.6	11	10.5	13	5.6
t_{PHZ}	$\overline{OE}$	Y	MAX	5.4	5.9	11.3	10.5	13	6.8
t_{PLZ}				4.3	5.4	10.7	10.5	13	6.8

UNIT: ns

PRODUCTION DATA information is current as of publication date. Products conform to specifications per the terms of Texas Instruments standard warranty. Production processing does not necessarily include testing of all parameters. See www.ti.com/sc/logic for the most current data sheets.

Logic Diagram

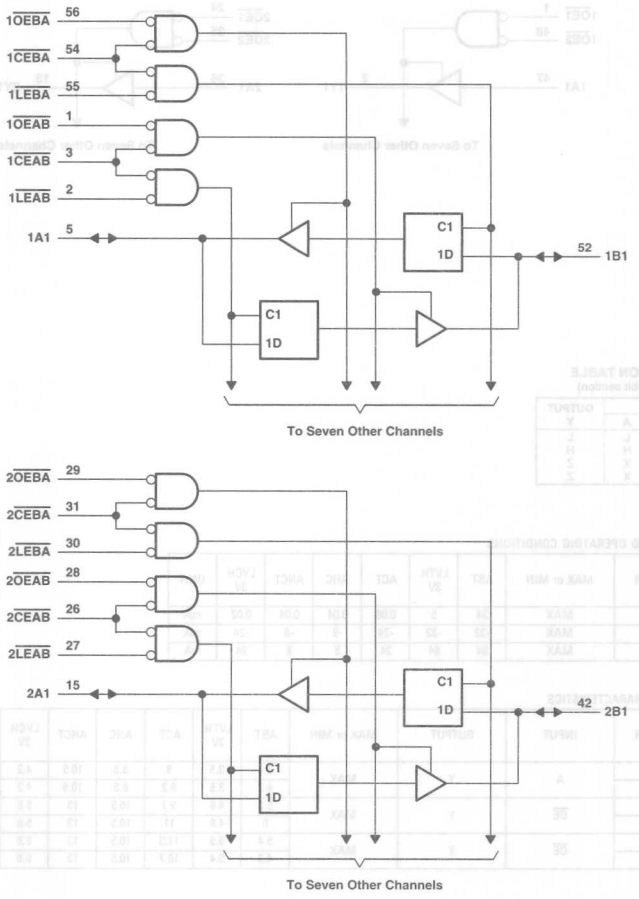

: OBSOLETED or NOT RECOMMENDED NEW DESIGNS

FUNCTION TABLE
(each 8-bit section)

INPUTS				OUTPUT
$\overline{OEAB}$	LEAB	$\overline{OEAB}$	A	B
H	X	X	X	Z
X	X	H	X	Z
L	H	L	X	B_0‡
L	L	L	L	L
L	L	L	H	H

† A-to-B data flow is shown: B-to-A flow control is the same except that it uses $\overline{CEBA}$, $\overline{LEBA}$, and $\overline{OEBA}$.
‡ Output level before the indicated steady-state input conditions were established.

RECOMMENDED OPERATING CONDITIONS

PARAMETER	MAX or MIN	ABT	LVTH 3V	AC	ACT	LVC 3V	LVCH 3V	ALVCH 3V	UNIT
I_{CC}	MAX	35	5	0.08	0.08	0.04	0.02	0.04	mA
I_{OH}	MAX	-32	-32	-24	-24	-24	-24	-24	mA
I_{OL}	MAX	64	64	24	24	24	24	24	mA

SWITCHING CHARACTERISTICS

PARAMETER	INPUT	OUTPUT	MAX or MIN	ABT	LVTH 3V	AC	ACT	LVC 3V	LVCH 3V	ALVCH 3V
t_w Pulse duration, $\overline{LEAB}$ or $\overline{LEBA}$ low			MIN	4	3.3	4	7.5	4	3.3	3.3
t_{su} Setup time	Data before $\overline{LEAB}$ ↑ or $\overline{LEBA}$ ↑, high		MIN	1.5	0.5	1	2.5	2	1.1	1.2
	Data before $\overline{LEAB}$ ↑ or $\overline{LEBA}$ ↑, low		MIN	3.5	0.8	1	2.5	2	1.1	1.2
	Data before $\overline{CEAB}$ ↑ or $\overline{CEBA}$ ↑, high		MIN	-	0	-	-	2	1.1	1.2
	Data before $\overline{CEAB}$ ↑ or $\overline{CEBA}$ ↑, low		MIN	-	0.6	-	-	2	1.1	1.2
t_h Hold time	Data after $\overline{LEAB}$ ↑ or $\overline{LEBA}$ ↑, high		MIN	1.5	1.5	3	4	2	1.9	1.3
	Data after $\overline{LEAB}$ ↑ or $\overline{LEBA}$ ↑, low		MIN	2	1.2	3	4	2	1.9	1.3
	Data after $\overline{CEAB}$ ↑ or $\overline{CEBA}$ ↑, high		MIN	-	1.7	-	-	2	1.9	1.3
	Data after $\overline{CEAB}$ ↑ or $\overline{CEBA}$ ↑, low		MIN	-	1.6	-	-	2	1.9	1.3
t_{PLH}	A or B	B or A	MAX	3.8	3.2	8.8	10.5	8	5.4	4.3
t_{PHL}				5.1	3.2	9.2	11.6	8	5.4	4.3
t_{PLH}	$\overline{LE}$	A or B	MAX	5.2	3.9	11.5	13.8	9	6.1	5
t_{PHL}				5.6	3.9	10.9	13.5	9	6.1	5
t_{PZH}	$\overline{OE}$	A or B	MAX	5.2	4.3	9.6	11.4	8.5	6.3	5.3
t_{PZL}				7	4.3	11.3	13.2	8.5	6.3	5.3
t_{PHZ}	$\overline{OE}$	A or B	MAX	5.7	4.7	8.9	11.1	8.5	6.3	4.6
t_{PLZ}				4.6	4.4	8.4	9.6	8.5	6.3	4.6
t_{PZH}	$\overline{CE}$	A or B	MAX	6.2	4.5	9.8	11.7	9	6.6	5.6
t_{PZL}				7.8	4.5	11.5	13.5	9	6.6	5.6
t_{PHZ}	$\overline{CE}$	A or B	MAX	6.6	4.9	9.3	11.6	9	6.6	5.1
t_{PLZ}				5.4	4.7	8.8	10.5	9	6.6	5.1

UNIT: ns

Logic Diagram

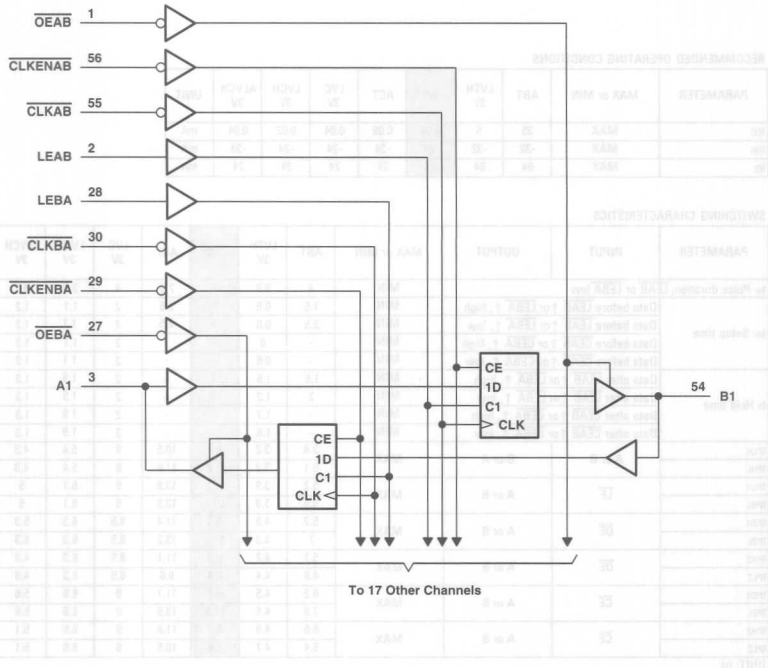

: OBSOLETED or NOT RECOMMENDED NEW DESIGNS

FUNCTION TABLE

INPUTS					OUTPUT
$\overline{CLKENAB}$	$\overline{OEAB}$	LEAB	$\overline{CLKAB}$	A	B
X	H	X	X	X	Z
X	L	H	X	L	L
X	L	H	X	H	H
H	L	L	X	X	B_0‡
H	L	L	X	X	B_0‡
L	L	L	↓	L	L
L	L	L	↓	H	H
L	L	L	H	X	B_0‡
L	L	L	L	X	B_0§

† A-to-B data flow is shown: B-to-A flow is similar but uses $\overline{OEBA}$, LEBA, $\overline{CLKBA}$ and $\overline{CLKENBA}$.
‡ Output level before the indicated steady-state input conditions were established.
§ Output level before the indicated steady-state input conditions were established, provided that $\overline{CLKAB}$ was low before LEAB went low.

RECOMMENDED OPERATING CONDITIONS

PARAMETER	MAX or MIN	ABT	ALVCH 3V	UNIT
I_{CC}	MAX	36	0.04	mA
I_{OH}	MAX	-32	-24	mA
I_{OL}	MAX	64	24	mA

SWITCHING CHARACTERISTICS

PARAMETER	INPUT	OUTPUT	MAX or MIN	ABT	ALVCH 3V
f_{max}			MIN	150	150
t_w Pulse duration	LEAB or LEBA high		MIN	2.5	3.3
	$\overline{CLKAB}$ or $\overline{CLKBA}$ high or low		MIN	3	3.3
t_{su} Setup time	A before $\overline{CLKAB}$ ↓ or B before $\overline{CLKBA}$ ↓		MIN	3	-
	Data before $\overline{CLK}$ ↑			-	1.2
	A before LEAB ↓or B before LEBA ↓, $\overline{CLK}$ high		MIN	2.5	1.1
	A before LEAB ↓or B before LEBA ↓, $\overline{CLK}$ low		MIN	2.5	1.5
	$\overline{CLKEN}$ after CLK ↓			2.5	-
	$\overline{CLKEN}$ after CLK ↑		MIN	2.5	0.8
t_h Hold time	A after $\overline{CLKAB}$ ↓ or B after $\overline{CLKBA}$ ↓		MIN	0	-
	Data after $\overline{CLK}$ ↑			-	1.5
	A after LEAB ↓or B after LEBA ↓, $\overline{CLK}$ high		MIN	2	1.6
	A after LEAB ↓or B after LEBA ↓, $\overline{CLK}$ low		MIN	2	1.3
	$\overline{CLKEN}$ after CLK ↓			1	-
	$\overline{CLKEN}$ after CLK ↑		MIN	-	1.4
t_{PLH}	A or B	B or A	MAX	4	4
t_{PHL}				4.9	4
t_{PLH}	LEAB or LEBA	B or A	MAX	5	4.8
t_{PHL}				5	4.8
t_{PLH}	$\overline{CLKAB}$ or $\overline{CLKBA}$	B or A	MAX	5.3	5.7
t_{PHL}				5	5.7
t_{PZH}	$\overline{OEAB}$	B	MAX	5.1	5.2
t_{PZL}				5.4	5.2
t_{PHZ}	$\overline{OEAB}$	B	MAX	6.2	4.4
t_{PLZ}				5.4	4.4
t_{PZH}	$\overline{OEBA}$	A	MAX	5.1	5.2
t_{PZL}				5.4	5.2
t_{PHZ}	$\overline{OEBA}$	A	MAX	6.2	4.4
t_{PLZ}				5.4	4.4

UNIT fmax : MHz other : ns

Logic Diagram

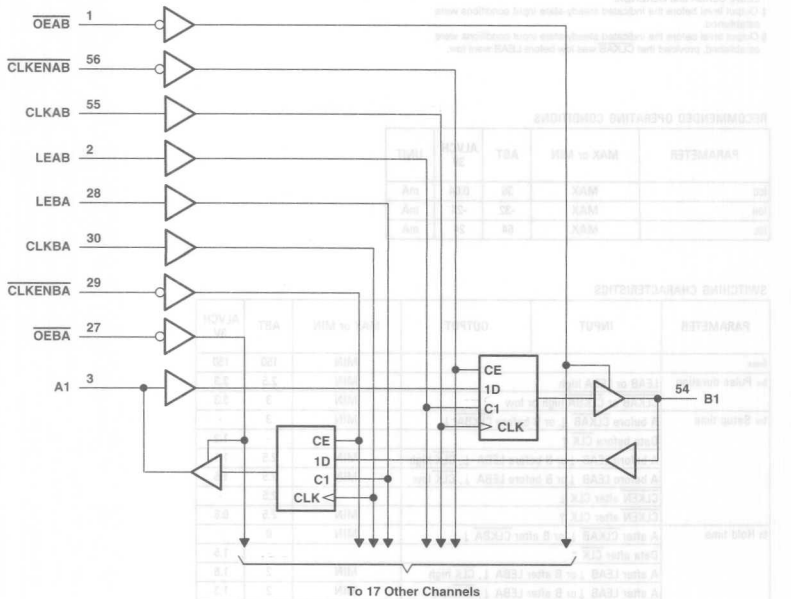

L	L	L		H	H
L	L	L	L	X	B_0‡
L	L	L	H	X	B_0§

† A-to-B data flow is shown: B-to-A flow is similar but uses $\overline{OEBA}$, LEBA, CLKBA and $\overline{CLKENBA}$.
‡ Output level before the indicated steady-state input conditions were established.
§ Output level before the indicated steady-state input conditions were established, provided that CLKAB was low before LEAB went low.

RECOMMENDED OPERATING CONDITIONS

PARAMETER	MAX or MIN	ABT	ALVTH 3V	ALVCH 3V	ALVCHR 3V	UNIT
I_{CC}	MAX	36	5	0.04	0.04	mA
I_{OH}	MAX	-32	-32	-24	-12	mA
I_{OL}	MAX	64	64	24	12	mA

SWITCHING CHARACTERISTICS

PARAMETER	INPUT	OUTPUT	MAX or MIN	ABT	ALVTH 3V	ALVCH 3V	ALVCHR 3V
f_{max}			MIN	150	150	150	150
t_w Pulse duration	LEAB or LEBA high		MIN	2.5	1.8	3.3	3.3
	CLKAB or CLKBA high or low		MIN	3	2.3	3.3	3.3
t_{su} Setup time	Data before CLK ↑ high		MIN	4	2.4	2.1	2.1
	Data before CLK ↑ low			4	3.8	2.1	2.1
	A before LEAB ↓ or B before LEBA ↓, CLK high		MIN	2.5	1	1.6	1.6
	A before LEAB ↓ or B before LEBA ↓, CLK low		MIN	1	0.6	1.1	1.1
	$\overline{CLKEN}$ before ↑ high		MIN	2.5	1.4	1.7	1.7
	$\overline{CLKEN}$ before ↑ low			2.5	1.9	1.7	1.7
t_h Hold time	Data after CLK ↑ high		MIN	0	0.5	0.8	0.8
	Data after CLK ↑ low			0	0.5	0.8	0.8
	A after LEAB ↓ or B after LEBA ↓, $\overline{CLK}$ high		MIN	2	2	1.4	1.4
	A after LEAB ↓ or B after LEBA ↓, $\overline{CLK}$ low		MIN	2	2.3	1.7	1.7
	$\overline{CLKEN}$ after ↑ high		MIN	0	0.6	0.6	0.6
	$\overline{CLKEN}$ after ↑ low			0	0.5	0.6	0.6
t_{PLH}	A or B	B or A	MAX	4	3.9	4.1	4.4
t_{PHL}				4.9	3.9	4.1	4.4
t_{PLH}	LEAB or LEBA	B or A	MAX	5	4.6	4.7	5.1
t_{PHL}				5.2	4.6	4.7	5.1
t_{PLH}	CLKAB or CLKBA	B or A	MAX	4.7	4.5	5	5.4
t_{PHL}				4.6	4.6	5	5.4
t_{PZH}	$\overline{OEAB}$	B	MAX	5.5	4.2	5.2	5.6
t_{PZL}				5.8	4.4	5.2	5.6
t_{PHZ}	$\overline{OEAB}$	B	MAX	6.2	5.3	4.4	4.7
t_{PLZ}				5.4	4.6	4.4	4.7
t_{PZH}	$\overline{OEBA}$	A	MAX	5.5	4.2	5.2	5.6
t_{PZL}				5.8	4.4	5.2	5.6
t_{PHZ}	$\overline{OEBA}$	A	MAX	6.2	5.3	4.4	4.7
t_{PLZ}				5.4	4.6	4.4	4.7

UNIT fmax : MHz other : ns

Logic Diagram

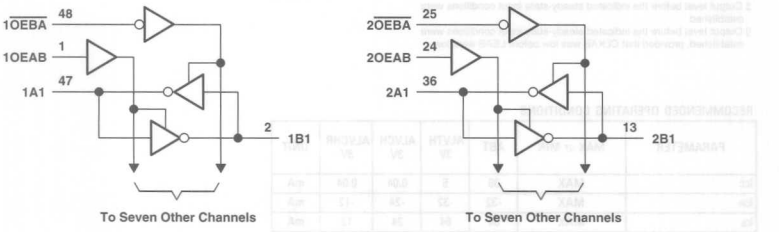

: OBSOLETED or NOT RECOMMENDED NEW DESIGNS

FUNCTION TABLE

INPUTS		OPERATION
$\overline{OEBA}$	OEAB	
L	L	$\overline{B}$ data to A bus
L	H	$\overline{B}$ data to A bus, $\overline{A}$ data to B bus
H	L	Isolation
H	H	$\overline{A}$ data to B bus

RECOMMENDED OPERATING CONDITIONS

PARAMETER	MAX or MIN	AC	ACT	UNIT
I_{CC}	MAX	0.08	0.08	mA
I_{OH}	MAX	-24	-24	mA
I_{OL}	MAX	24	24	mA

SWITCHING CHARACTERISTICS

PARAMETER	INPUT	OUTPUT	MAX or MIN	AC	ACT
t_{PLH}	A	B	MAX	6.8	8.5
t_{PHL}				8.2	10.5
t_{PLH}	B	A	MAX	6.8	8.5
t_{PHL}				8.2	10.5
t_{PZH}	$\overline{OEBA}$	A	MAX	7.9	9.1
t_{PZL}				9.4	10.9
t_{PHZ}	$\overline{OEBA}$	A	MAX	9.2	11.9
t_{PLZ}				8.3	10.6
t_{PZH}	OEAB	B	MAX	7.3	8.9
t_{PZL}				9.1	10.5
t_{PHZ}	OEAB	B	MAX	9	10.8
t_{PLZ}				8	9.6

UNIT: ns

Logic Diagram

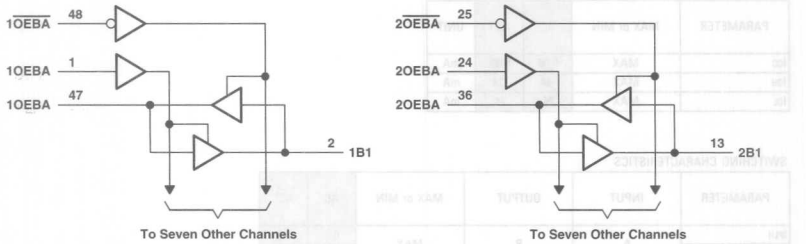

FUNCTION TABLE
(each 8-bit section)

INPUTS		OPERATION
$\overline{OEBA}$	OEAB	
L	L	B data to A bus
L	H	B data to A bus, A data to B bus
H	L	Isolation
H	H	A data to B bus

RECOMMENDED OPERATING CONDITIONS

PARAMETER	MAX or MIN	ABT	ACT	UNIT
I_{CC}	MAX	35	0.08	mA
I_{OH}	MAX	-32	-24	mA
I_{OL}	MAX	64	24	mA

SWITCHING CHARACTERISTICS

PARAMETER	INPUT	OUTPUT	MAX or MIN	ABT	ACT
t_{PLH}	A or B	B or A	MAX	3.6	7.7
t_{PHL}				4.3	8.6
t_{PZH}	$\overline{OEBA}$	A	MAX	4.9	9.5
t_{PZL}				6	11.1
t_{PHZ}	$\overline{OEBA}$	A	MAX	6	12
t_{PLZ}				5.4	10.7
t_{PZH}	OEAB	B	MAX	4.9	9.3
t_{PZL}				6	10.6
t_{PHZ}	OEAB	B	MAX	6	10.4
t_{PLZ}				5.4	9.5

UNIT: ns

Logic Diagram

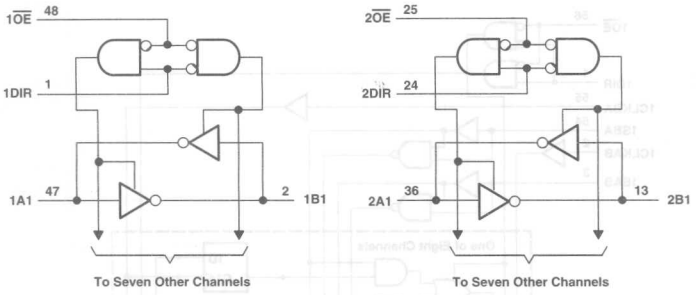

FUNCTION TABLE
(each 8-bit section)

INPUTS		OPERATION
$\overline{OE}$	DIR	
L	L	$\overline{B}$ data to A bus
L	H	$\overline{A}$ data to B bus
H	X	Isolation

RECOMMENDED OPERATING CONDITIONS

PARAMETER	MAX or MIN	ABT	AC	ACT	UNIT
I_{CC}	MAX	32	0.08	0.08	mA
I_{OH}	MAX	-32	-24	-24	mA
I_{OL}	MAX	64	24	24	mA

SWITCHING CHARACTERISTICS

PARAMETER	INPUT	OUTPUT	MAX or MIN	ABT	AC	ACT
t_{PLH}	A or B	B or A	MAX	4.3	7.3	9.1
t_{PHL}				3.9	8.6	10.5
t_{PZH}	$\overline{OE}$	A or B	MAX	5.5	8	9.8
t_{PZL}				6.3	9.9	11.5
t_{PHZ}	$\overline{OE}$	A or B	MAX	6.3	9.9	12.5
t_{PLZ}				4.2	9	11

UNIT: ns

PRODUCTION DATA information is current as of publication date. Products conform to specifications per the terms of Texas Instruments standard warranty. Production processing does not necessarily include testing of all parameters. See www.ti.com/sc/logic for the most current data sheets.

Logic Diagram

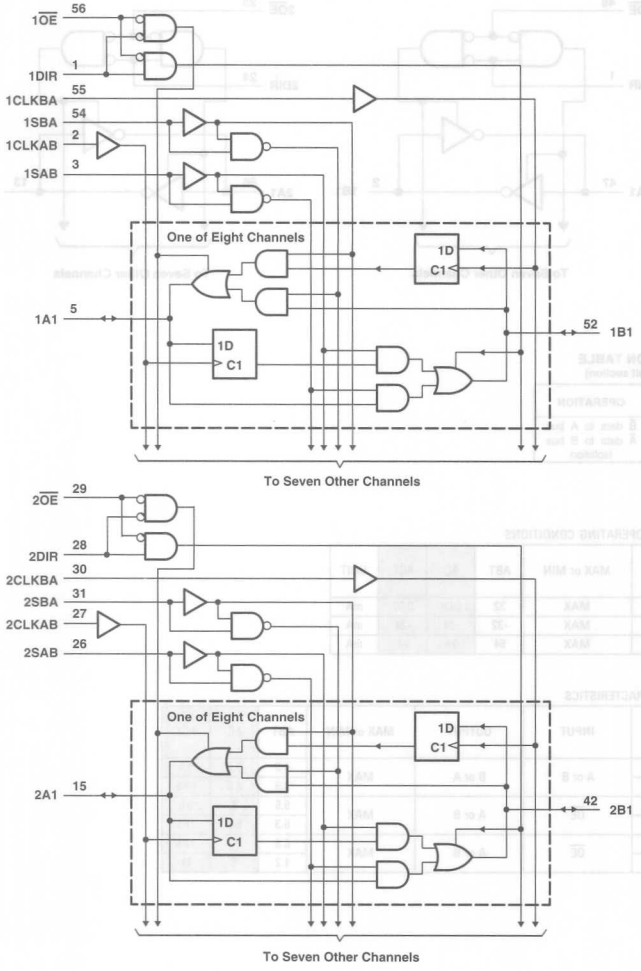

: OBSOLETED or NOT RECOMMENDED NEW DESIGNS

FUNCTION TABLE

INPUTS						DATA I/O		OPERATION OR FUNCTION
$\overline{OE}$	DIR	CLKAB	CLKBA	SAB	SBA	A1 THRU A8	B1 THRU B8	
X	X	↑	X	X	X	Input	Unspecified †	Store A, B unspecified †
X	X	X	↑	X	X	Unspecified †	Input	Store B, A unspecified †
H	X	↑	↑	X	X	Input	Input	Store A and B data
H	X	H or L	H or L	X	X	Input disabled	Input disabled	Isolation, hold storage
L	L	X	X	X	L	Output	Input	Real-time B data to A bus
L	L	X	H or L	X	H	Output	Input	Stored B data to A bus
L	H	X	X	L	X	Input	Output	Real-time A data to B bus
L	H	H or L	X	H	X	Input	Output	Stored A data to B bus

† The data output functions may be enabled or disabled by various signals at the $\overline{OE}$ and DIR inputs. Data input functions are always enabled; i.e., data at the bus pins will be stored on every low-to-high transition of the clock inputs.

RECOMMENDED OPERATING CONDITIONS

PARAMETER		MAX or MIN	ABT	LVTH 3V	AC	ACT	LVCH 3V	ALVCH 3V	AVC	UNIT
I_{CC}	'	MAX	32	5	0.08	0.08	0.02	0.04	0.04	mA
I_{OH}		MAX	-32	-32	-24	-24	-24	-24	-12	mA
I_{OL}		MAX	64	64	24	24	24	24	12	mA

SWITCHING CHARACTERISTICS

PARAMETER	INPUT	OUTPUT	MAX or MIN	ABT	LVTH 3V	AC	ACT	LVCH 3V	ALVCH 3V	AVC
f_{max}			MIN	125	150	75	90	150	150	350
t_w Pulse duration	CLKAB or CLKBA high or low		MIN	4.3	3.3	6.5	5.5	3.3	3.3	1.4
t_{su} Setup time	A or B before CLKAB ↑ or CLKBA ↑, data high		MIN	3	1.2	5	4	2.9	1.4	0.8
	A or B before CLKAB ↑ or CLKBA ↑, data low		MIN	3	2	5	6	2.9	1.4	0.8
t_h Hold time	A or B after CLKAB ↑ or CLKBA ↑, data high		MIN	0	0.5	1	1.5	0.3	0.7	0.6
	A or B after CLKAB ↑ or CLKBA ↑, data low		MIN	0	0.5	1	1.5	0.3	0.7	0.6
t_{PLH}	CLKAB or CLKBA	B or A	MAX	4.9	4.2	12.1	12.2	6.7	4.5	3.3
t_{PHL}				4.7	4.2	11.9	12.3	6.7	4.5	3.3
t_{PLH}	A or B	B or A	MAX	3.9	3.4	9.5	10.6	5.7	3.9	2.6
t_{PHL}				4.6	3.4	9.7	11.4	5.7	3.9	2.6
t_{PLH}	SAB or SBA	B or A	MAX	5	4.5	12.5	15.6	7.7	5.3	4
t_{PHL}				5	4.5	13.1	16.7	7.7	5.3	4
t_{PZH}	$\overline{OE}$	A or B	MAX	5.5	4.3	10.5	11.9	6.9	5.1	4
t_{PZL}				5.7	4.3	12.2	13.5	6.9	5.1	4
t_{PHZ}	$\overline{OE}$	A or B	MAX	5.4	5.6	8.9	10.2	6.9	4.7	4.2
t_{PLZ}				4.5	5.4	8.6	9.9	6.9	4.7	4.2
t_{PZH}	DIR	A or B	MAX	5.4	4.4	10.9	15.2	7.2	5.1	4.3
t_{PZL}				5.6	4.4	12.2	13.1	7.2	5.1	4.3
t_{PHZ}	DIR	A or B	MAX	6.7	5.7	9.4	10.8	7	5.3	4.3
t_{PLZ}				5.9	5.2	8.8	10.4	7	5.3	4.3

UNIT fmax : MHz other : ns

Logic Diagram

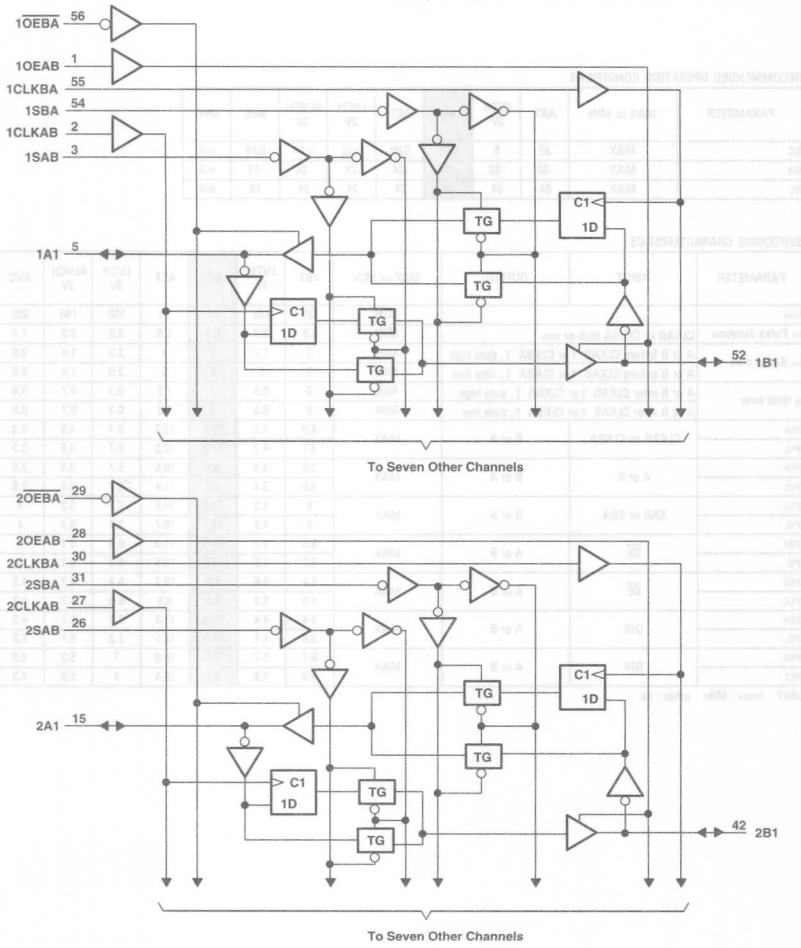

: OBSOLETED or NOT RECOMMENDED NEW DESIGNS

FUNCTION TABLE

INPUTS						DATA I/O †		OPERATION OR FUNCTION
OEAB	$\overline{OEBA}$	CLKAB	CLKBA	SAB	SBA	A1-A8	B1-B8	
L	H	L	L	X	X	Input	Input	Isolation
L	H	↑	↑	X	X	Input	Input	Store A and B data
X	H	↑	L	X	X	Input	Unspecified‡	Store A, hold B
H	H	↑	↑	X‡	X	Input	Output	Store A in both registers
L	X	L	↑	X	X	Unspecified‡	Input	Hold A, store B
L	L	↑	↑	X	X‡	Output	Input	Store B in both registers
L	L	X	X	X	L	Output	Input	Real-time $\overline{B}$ data to A bus
L	L	X	L	X	H	Output	Input	Store $\overline{B}$ data to A bus
H	H	X	X	L	X	Input	Output	Real-time $\overline{A}$ data to B bus
H	H	L	X	H	X	Input	Output	Store $\overline{A}$ data to B bus
H	L	L	L	H	H	Output	Output	Store $\overline{A}$ data to B bus and Store $\overline{B}$ data to A bus

† The data-output functions may be enabled or disabled by a variety of level combinations at OEAB or $\overline{OEBA}$. Data-input functions are always enabled; i.e., data at the bus terminals is stored on every low-to-high transition of the clock inputs.
‡ Select control = L; clocks can occur simultaneously.
Select control = H; clocks must be staggered to load both registers.

RECOMMENDED OPERATING CONDITIONS

PARAMETER	MAX or MIN	ACT	UNIT
I_{CC}	MAX	0.08	mA
I_{OH}	MAX	-24	mA
I_{OL}	MAX	24	mA

SWITCHING CHARACTERISTICS

PARAMETER	INPUT	OUTPUT	MAX or MIN	ACT
f_{max}			MIN	90
t_w Pulse duration	CLKAB or CLKBA high or low		MIN	5.5
t_{su} Setup time	A before CLKAB ↑ or B before CLKBA ↑		MIN	5.3
t_h Hold time	A after CLKAB ↑ or B after CLKBA ↑		MIN	1
t_{PLH}	A or B	B or A	MAX	11.3
t_{PHL}				11.9
t_{PLH}	CLKAB or CLKBA	A or B	MAX	13.7
t_{PHL}				13.6
t_{PLH}	SAB or SBA	A or B	MAX	17.3
t_{PHL}				17.8
t_{PZH}	$\overline{OEBA}$	A	MAX	12.3
t_{PZL}				13.9
t_{PHZ}	$\overline{OEBA}$	A	MAX	10.6
t_{PLZ}				10.8
t_{PZH}	OEAB	B	MAX	11.9
t_{PZL}				13.5
t_{PHZ}	OEAB	B	MAX	11.4
t_{PLZ}				11.6

UNIT fmax : MHz other : ns

16-BIT BUS TRANSCEIVERS AND REGISTERS WITH 3-STATE OUTPUTS

Logic Diagram

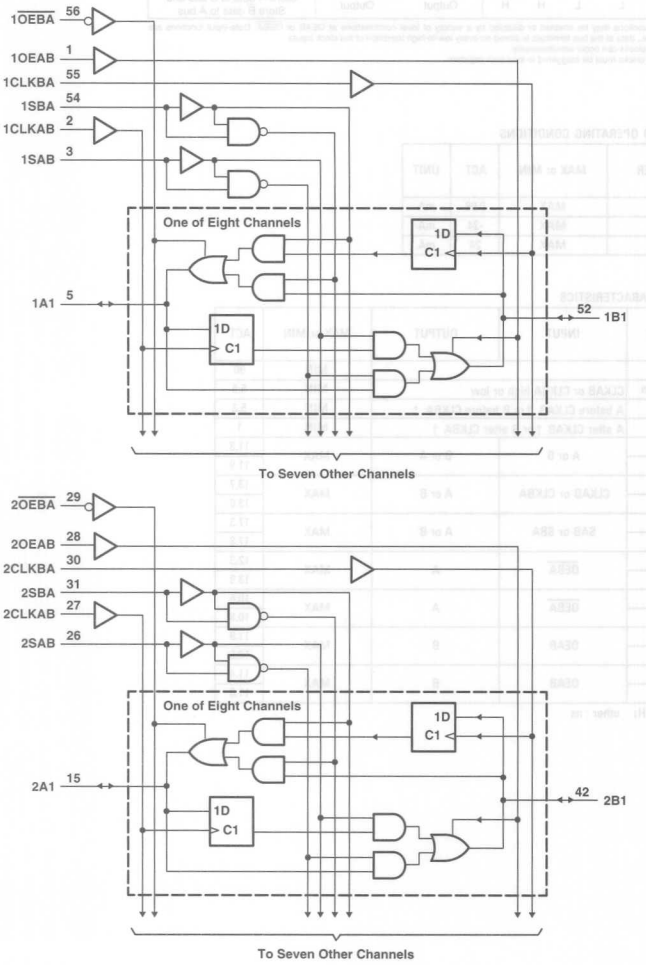

: OBSOLETED or NOT RECOMMENDED NEW DESIGNS

FUNCTION TABLE

INPUTS						DATA I/O†		OPERATION OR FUNCTION
OEAB	$\overline{OEBA}$	CLKAB	CLKBA	SAB	SBA	A1 THRU A8	B1 THRU B8	
L	H	H or L	H or L	X	X	Input	Input	Isolation
L	H	↑	↑	X	X	Input	Input	Store A and B data
X	H	↑	H or L	X	X	Input	Unspecified ‡	Store A, hold B
H	H	↑	↑	X‡	X	Input	Output	Store A in both registers
L	X	H or L	↑	X	X	Unspecified ‡	Input	Hold A, store B
L	L	↑	↑	X	X‡	Output	Input	Store B in both registers
L	L	X	X	X	L	Output	Input	Real-time B data to A bus
L	L	X	H or L	X	H	Output	Input	Stored B data to A bus
H	H	X	X	L	X	Input	Output	Real-time A data to B bus
H	H	H or L	X	H	X	Input	Output	Store A data to B bus
H	L	H or L	H or L	H	H	Output	Output	Stored A data to B bus and stored B data A bus

† The data output functions may be enabled or disabled by a variety of level combinations at the OEAB or $\overline{OEBA}$ inputs. Data input functions are always enabled; i.e., data at the bus pins is stored on every low-to-high transition of the clock inputs.

‡ Select control = L; clocks can occur simultaneously.
Select control = H; clocks must be staggered in order to load both registers.

RECOMMENDED OPERATING CONDITIONS

PARAMETER	MAX or MIN	ABT	LVTH 3V	AC	ACT	LVCH 3V	UNIT
I_{CC}	MAX	32	5	0.08	0.08	0.02	mA
I_{OH}	MAX	-32	-32	-24	-24	-24	mA
I_{OL}	MAX	64	64	24	24	24	mA

SWITCHING CHARACTERISTICS

PARAMETER	INPUT	OUTPUT	MAX or MIN	ABT	LVTH 3V	AC	ACT	LVCH 3V
f_{max}			MIN	125	150	95	90	150
t_w Pulse duration	CLKAB or CLKBA high or low		MIN	4.3	3.3	5	5.5	3.3
t_{su} Setup time	A before CLKAB ↑ or B before CLKBA ↑, high		MIN	3	1.2	4.5	4.5	3
	A before CLKAB ↑ or B before CLKBA ↑, low		MIN	3	2	4.5	4.5	3
t_h Hold time	A after CLKAB ↑ or B after CLKBA ↑, high		MIN	0	0.5	0	1	0.2
	A after CLKAB ↑ or B after CLKBA ↑, low		MIN	0	0.5	0	1	0.2
t_{PLH}	CLKAB or CLKBA	A or B	MAX	4.9	4.2	12.2	12.3	6.4
t_{PHL}				4.7	4.2	12.3	12.3	6.4
t_{PLH}	A or B	B or A	MAX	3.9	3.4	9.9	10.5	6.3
t_{PHL}				4.6	3.4	10.2	11.6	6.3
t_{PLH}	SAB or SBA	A or B	MAX	5	4.5	13.8	16	7.4
t_{PHL}				5	4.5	13.8	16.9	7.4
t_{PZH}	$\overline{OEBA}$	A	MAX	5	4.3	10.7	11.7	6.3
t_{PZL}				5.3	4.3	13.2	13.4	6.3
t_{PHZ}	$\overline{OEBA}$	A	MAX	4.9	5.6	8.8	9.5	6.2
t_{PLZ}				4	5.4	8.7	9.2	6.2
t_{PZH}	OEAB	B	MAX	4.2	4.2	10.5	10.8	6.3
t_{PZL}				4.6	4.2	13	12.4	6.3
t_{PHZ}	OEAB	B	MAX	5.9	5.5	8	10.5	6.2
t_{PLZ}				5.2	5.5	7.8	9.9	6.2

UNIT fmax : MHz other : ns

16-BIT TRANSCEIVERS WITH PARITY GENERATORS/CHECKERS AND 3-STATE OUTPUTS

Logic Diagram

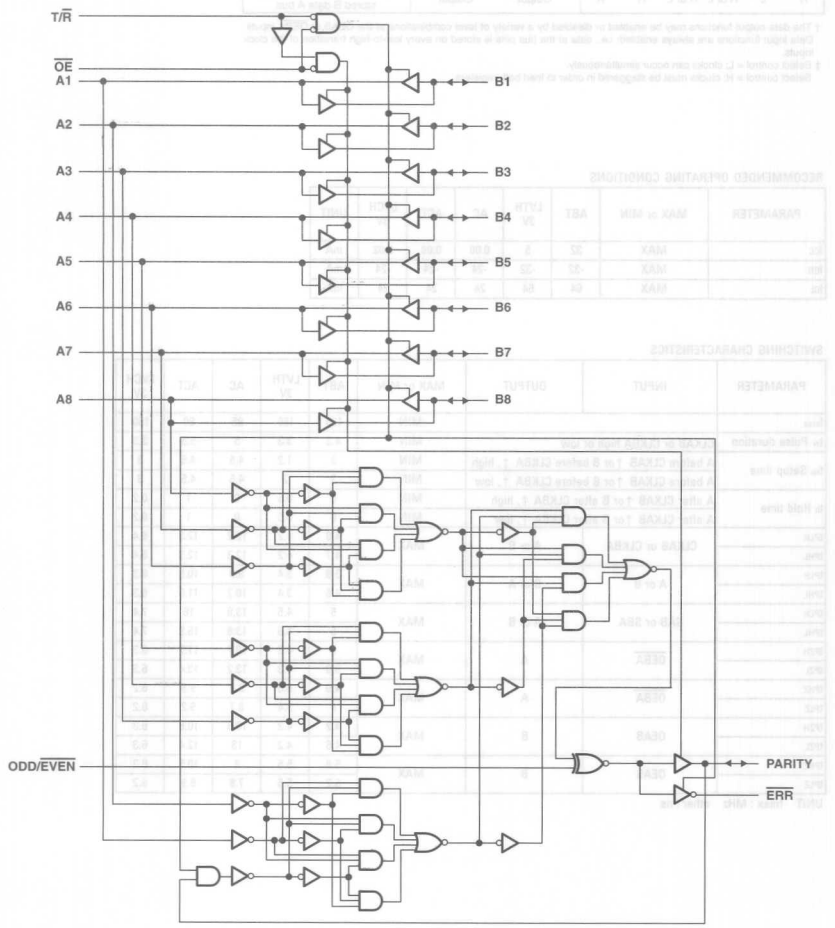

: OBSOLETED or NOT RECOMMENDED NEW DESIGNS

FUNCTION TABLE
(each 8-bit section)

NUMBER OF A OR B INPUTS THAT ARE HIGH	INPUTS			INPUT/OUTPUT PARITY	OUTPUTS	
	$\overline{OE}$	T/R	ODD/$\overline{EVEN}$		$\overline{ERR}$	OUTPUT MODE
0, 2, 4, 6, 8	L	H	H	H	Z	Transmit
	L	H	L	L	Z	Transmit
	L	L	H	H	H	Receive
	L	L	H	L	L	Receive
	L	L	L	H	L	Receive
	L	L	L	L	H	Receive
1, 3, 5, 7	L	H	H	L	Z	Transmit
	L	H	L	H	Z	Transmit
	L	L	H	H	L	Receive
	L	L	H	L	H	Receive
	L	L	L	H	H	Receive
	L	L	L	L	L	Receive
Don't care	H	X	X	Z	Z	Z

RECOMMENDED OPERATING CONDITIONS

PARAMETER	MAX or MIN	ABT	ACT	UNIT
I_{CC}	MAX	36	0.08	mA
I_{OH}	MAX	-32	-24	mA
I_{OL}	MAX	64	24	mA

SWITCHING CHARACTERISTICS

PARAMETER	INPUT	OUTPUT	MAX or MIN	ABT	ACT
t_{PLH}	A or B	B or A	MAX	4.1	10.7
t_{PHL}				4.3	10.6
t_{PLH}	A or B	PARITY	MAX	6.7	14.3
t_{PHL}				6.1	14.3
t_{PLH}	ODD / $\overline{EVEN}$	PARITY, $\overline{ERR}$	MAX	6.7	13.7
t_{PHL}				6.1	14.1
t_{PLH}	B	$\overline{ERR}$	MAX	6.7	14.6
t_{PHL}				6.1	14.7
t_{PLH}	PARITY	$\overline{ERR}$	MAX	6.7	13.8
t_{PHL}				6.1	14.2
t_{PZH}	$\overline{OE}$	A or B	MAX	5.6	11.3
t_{PZL}				6	13
t_{PHZ}	$\overline{OE}$	A or B	MAX	5.4	11.2
t_{PLZ}				4.3	10.5
t_{PZH}	$\overline{OE}$	PARITY, $\overline{ERR}$	MAX	5.6	11.3
t_{PZL}				6	13
t_{PHZ}	$\overline{OE}$	PARITY, $\overline{ERR}$	MAX	5.4	11.2
t_{PLZ}				4.3	10.5

UNIT: ns

16721

20-BIT FLIP-FLOP WITH 3-STATE OUTPUTS

Logic Diagram

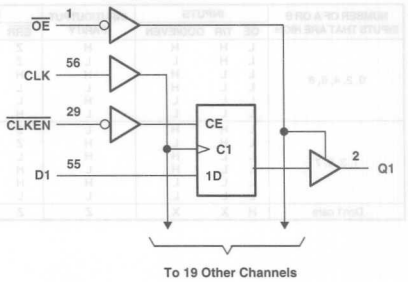

FUNCTION TABLE
(each flip-flop)

INPUTS				OUTPUT
$\overline{OE}$	$\overline{CLKEN}$	CLK	D	Q
L	H	X	H	Q_0
L	L	↑	H	H
L	L	↑	L	L
L	L	L	X	Q_0
H	X	X	X	Z

RECOMMENDED OPERATING CONDITIONS

PARAMETER	MAX or MIN	ALVCH 3V	UNIT
I_{CC}	MAX	0.04	mA
I_{OH}	MAX	-24	mA
I_{OL}	MAX	24	mA

SWITCHING CHARACTERISTICS

PARAMETER	INPUT	OUTPUT	MAX or MIN	ALVCH 3V
f_{max}			MIN	150
t_w Pulse duration	CLK high or low		MIN	3.3
t_{su} Setup time	Data before CLK ↑		MIN	3.1
	$\overline{CLKEN}$ before CLK ↑		MIN	2.7
t_h Hold time	Data after CLK ↑		MIN	0
	$\overline{CLKEN}$ after CLK ↑		MIN	0
t_{PLH}	CLK	Q	MAX	4.3
t_{PHL}				4.3
t_{PZH}	$\overline{OE}$	Q	MAX	4.8
t_{PZL}				4.8
t_{PHZ}	$\overline{OE}$	Q	MAX	4.4
t_{PLZ}				4.4

UNIT fmax : MHz other : ns

16722

22-BIT FLIP-FLOP WITH 3-STATE OUTPUTS

Logic Diagram

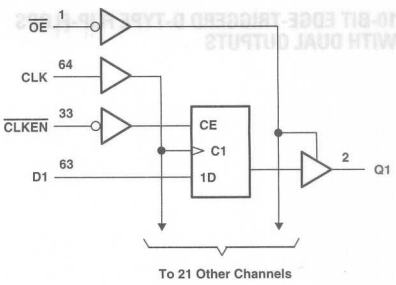

FUNCTION TABLE
(each flip-flop)

INPUTS				OUTPUT
$\overline{OE}$	$\overline{CLKEN}$	CLK	D	Q
L	H	X	X	Q_0
L	L	↑	H	H
L	L	↑	L	L
L	L	L or H	X	Q_0
H	X	X	X	Z

RECOMMENDED OPERATING CONDITIONS

PARAMETER	MAX or MIN	AVC 3V	UNIT
I_{CC}	MAX	0.04	mA
I_{OH}	MAX	-12	mA
I_{OL}	MAX	12	mA

SWITCHING CHARACTERISTICS

PARAMETER	INPUT	OUTPUT	MAX or MIN	AVC 3V
f_{max}			MIN	150
t_w Pulse duration	CLK high or low		MIN	2.8
t_{su} Setup time	Data before CLK ↑		MIN	2.5
	$\overline{CLKEN}$ before CLK ↑		MIN	1.4
t_h Hold time	Data after CLK ↑		MIN	0
	$\overline{CLKEN}$ after CLK ↑		MIN	1.2
t_{PLH}	CLK	Q	MAX	2.6
t_{PHL}				2.6
t_{PZH}	$\overline{OE}$	Q	MAX	4.3
t_{PZL}				4.3
t_{PHZ}	$\overline{OE}$	Q	MAX	3.4
t_{PLZ}				3.4

UNIT fmax : MHz other : ns

PRODUCTION DATA information is current as of publication date. Products conform to specifications per the terms of Texas Instruments standard warranty. Production processing does not necessarily include testing of all parameters. See www.ti.com/sc/logic for the most current data sheets.

16820

10-BIT EDGE-TRIGGERD D-TYPE FLIP-FLOPS WITH DUAL OUTPUTS

Logic Diagram

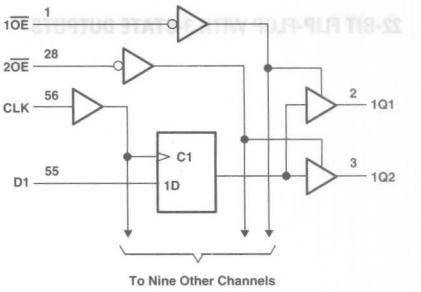

FUNCTION TABLE
(each flip-flop)

INPUTS			OUTPUT
$\overline{OE}_n$†	CLK	D	Q_n†
L	↑	H	H
L	↑	L	L
L	L	X	Q_0
H	X	X	Z

† n = 1, 2

RECOMMENDED OPERATING CONDITIONS

PARAMETER	MAX or MIN	ALVCH 3V	UNIT
I_{CC}	MAX	0.04	mA
I_{OH}	MAX	-24	mA
I_{OL}	MAX	24	mA

SWITCHING CHARACTERISTICS

PARAMETER	INPUT	OUTPUT	MAX or MIN	ALVCH 3V
f_{max}			MIN	150
t_w Pulse duration	CLK high or low		MIN	3.3
t_{su} Setup time	Data before CLK ↑		MIN	1.4
t_h Hold time	Data after CLK ↑		MIN	1
t_{PLH}	CLK	Q	MAX	4.8
t_{PHL}				4.8
t_{PZH}	$\overline{OE}$	Q	MAX	5
t_{PZL}				5
t_{PHZ}	$\overline{OE}$	Q	MAX	4.5
t_{PLZ}				4.5

UNIT fmax : MHz other : ns

: OBSOLETED or NOT RECOMMENDED NEW DESIGNS

16821

20-BIT BUS INTERFACE FLIP-FLOPS WITH 3-STATE OUTPUTS

Logic Diagram

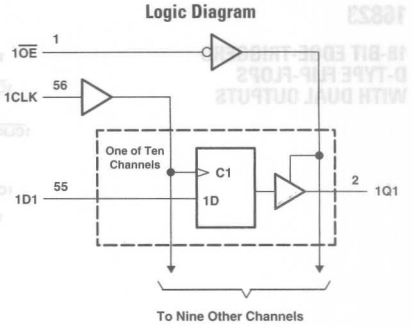

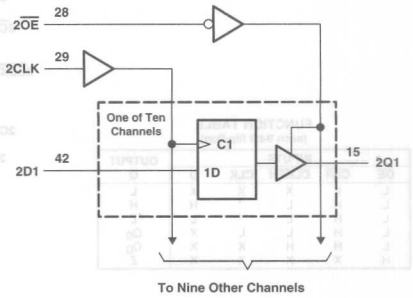

FUNCTION TABLE
(each flip-flop)

INPUTS			OUTPUT
$\overline{OE}$	CLK	D	Q
L	↑	H	H
L	↑	L	L
L	L	X	Q_0
H	X	X	Z

RECOMMENDED OPERATING CONDITIONS

PARAMETER	MAX or MIN	ABT	ALVTH 3V	ACT	ALVCH 3V	UNIT
I_{CC}	MAX	89	5	0.08	0.04	mA
I_{OH}	MAX	-32	-32	-24	-24	mA
I_{OL}	MAX	64	64	24	24	mA

SWITCHING CHARACTERISTICS

PARAMETER	INPUT	OUTPUT	MAX or MIN	ABT	ALVTH 3V	ACT	ALVCH 3V
f_{max}			MIN	150	150	70	150
t_w Pulse duration	CLK high or low		MIN	3.3	1.5	7	3.3
t_{su} Setup time	Data before CLK ↑, low		MIN	1.8	1.5	7.5	3.4
	Data before CLK ↑, high		MIN	1.8	1.5	7.5	3.4
t_h Hold time	Data after CLK ↑, high		MIN	1.3	1	0.5	0
	Data after CLK ↑, low		MIN	1.3	1	0.5	0
t_{PLH}	CLK	Q	MAX	6.1	3.5	13.4	4.5
t_{PHL}				5.4	3.5	14	4.5
t_{PZH}	$\overline{OE}$	Q	MAX	5.7	4.1	11.9	5.1
t_{PZL}				5.6	3.6	14.7	5.1
t_{PHZ}	$\overline{OE}$	Q	MAX	6.5	4.8	10.7	4.6
t_{PLZ}				7.1	4.8	10	4.6

UNIT fmax : MHz other : ns

PRODUCTION DATA information is current as of publication date. Products conform to specifications per the terms of Texas Instruments standard warranty. Production processing does not necessarily include testing of all parameters. See www.ti.com/sc/logic for the most current data sheets.

16823

18-BIT EDGE-TRIGGERD D-TYPE FLIP-FLOPS WITH DUAL OUTPUTS

Logic Diagram

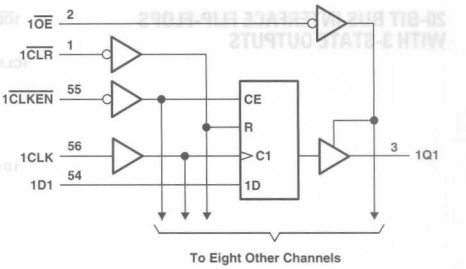

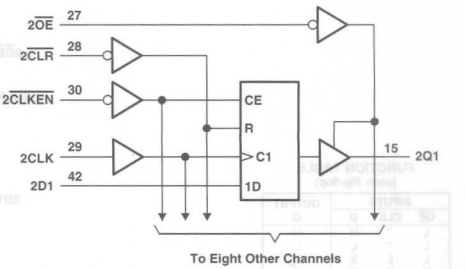

FUNCTION TABLE
(each 9-bit filp-flop)

INPUTS					OUTPUT
$\overline{OE}$	$\overline{CLR}$	$\overline{CLKEN}$	CLK	D	Q
L	L	X	X	X	L
L	H	L	↑	H	H
L	H	L	↑	L	L
L	H	L	L	X	Q_0
L	H	H	X	X	Q_0
H	X	X	X	X	Z

RECOMMENDED OPERATING CONDITIONS

PARAMETER	MAX or MIN	ABT	ABTH	AC	ACT	ALVCH 3V	UNIT
I_{CC}	MAX	80	80	0.08	0.08	0.04	mA
I_{OH}	MAX	-32	-32	-24	-24	-24	mA
I_{OL}	MAX	64	64	24	24	24	mA

SWITCHING CHARACTERISTICS

PARAMETER	INPUT	OUTPUT	MAX or MIN	ABT	ABTH	AC	ACT	ALVCH 3V
f_{max}			MIN	150	150	115	90	150
t_w Pulse duration	$\overline{CLR}$ low		MIN	3.3	3.3	3.3	3.3	3.3
	CLK high or low		MIN	3.3	3.3	4.4	5.5	3.3
t_{su} Setup time	$\overline{CLR}$ inactive		MIN	1.6	1.6	0.6	0.5	0.8
	Data high before CLK ↑		MIN	1.7	1.7	5	7	1
	Data low before CLK ↑		MIN	1.7	1.7	5	7	1.3
	$\overline{CLKEN}$ low before CLK ↑		MIN	2.8	2.8	4.2	3.5	1.5
t_h Hold time	Data high after CLK ↑		MIN	1.2	1.2	1.3	0.5	0.8
	Data low after CLK ↑		MIN	1.2	1.2	1.3	0.5	0.5
	$\overline{CLKEN}$ low after CLK ↑		MIN	0.6	0.6	1.4	2.5	0.4
t_{PLH}	CLK	Q	MAX	6.8	6.8	12	12.1	4.5
t_{PHL}				6	6	12.7	12.9	4.5
t_{PLH}	$\overline{CLR}$	Q	MAX	-	-	-	-	4.6
t_{PHL}				6.1	6.7	11	12.5	4.6
t_{PZH}	$\overline{OE}$	Q	MAX	4.9	4.9	9.7	10.7	4.8
t_{PZL}				5.5	5.5	11.8	12.8	4.8
t_{PHZ}	$\overline{OE}$	Q	MAX	6.1	6.1	9.3	10.3	4.5
t_{PLZ}				8.7	8.7	8.6	9.4	4.5

UNIT fmax : MHz other : ns

: OBSOLETED or NOT RECOMMENDED NEW DESIGNS

16825

18-BIT BUS BUFFERS/DRIVERS WITH 3-STATE OUTPUTS

Logic Diagram

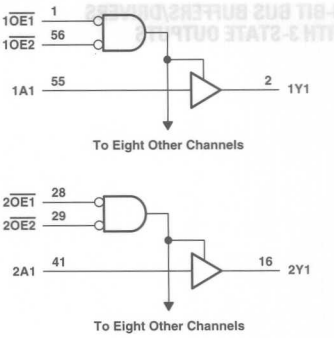

FUNCTION TABLE
(each 9-bit section)

INPUTS			OUTPUT
$\overline{OE1}$	$\overline{OE2}$	A	Y
L	L	L	L
L	L	H	H
H	X	X	Z
X	H	X	Z

RECOMMENDED OPERATING CONDITIONS

PARAMETER	MAX or MIN	ABT	ACT	ALVCH 3V	UNIT
I_{CC}	MAX	32	0.08	0.04	mA
I_{OH}	MAX	-32	-24	-24	mA
I_{OL}	MAX	64	24	24	mA

SWITCHING CHARACTERISTICS

PARAMETER	INPUT	OUTPUT	MAX or MIN	ABT	ACT	ALVCH 3V
t_{PLH}	A	Y	MAX	3.9	10.5	3.4
t_{PHL}				4.4	10.3	3.4
t_{PZH}	$\overline{OE}$	Y	MAX	6.1	11	4.7
t_{PZL}				6	13.2	4.7
t_{PHZ}	$\overline{OE}$	Y	MAX	6.9	11.5	4.5
t_{PLZ}				6.6	10.6	4.5

UNIT: ns

PRODUCTION DATA information is current as of publication date. Products conform to specifications per the terms of Texas Instruments standard warranty. Production processing does not necessarily include testing of all parameters. See www.ti.com/sc/logic for the most current data sheets.

16827

Logic Diagram

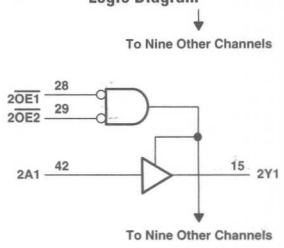

FUNCTION TABLE
(each 10-bit section)

INPUTS			OUTPUT
$\overline{OE1}$	$\overline{OE2}$	A	Y
L	L	L	L
L	L	H	H
H	X	X	Z
X	H	X	Z

RECOMMENDED OPERATING CONDITIONS

PARAMETER	MAX or MIN	ABT	ALVTH 3V	ACT	ALVCH 3V	AVC	UNIT
I_{CC}	MAX	32	6	0.08	0.04	0.04	mA
I_{OH}	MAX	-32	-32	-24	-24	-12	mA
I_{OL}	MAX	64	64	24	24	12	mA

SWITCHING CHARACTERISTICS

PARAMETER	INPUT	OUTPUT	MAX or MIN	ABT	ALVTH 3V	ACT	ALVCH 3V	AVC
t_{PLH}	A	Y	MAX	3.4	3	11	3.4	1.7
t_{PHL}				4.2	2.8	10.8	3.4	1.7
t_{PZH}	$\overline{OE}$	Y	MAX	5.6	3.9	11.7	4.7	5.1
t_{PZL}				5.5	3.4	14	4.7	5.1
t_{PHZ}	$\overline{OE}$	Y	MAX	6.6	5.8	12.4	4.5	4.7
t_{PLZ}				6.1	4.6	11.5	4.5	4.7

UNIT: ns

: OBSOLETED or NOT RECOMMENDED NEW DESIGNS

16831

1-TO-4 ADDRESS REGISTER/DRIVER WITH 3-STATE OUTPUTS

Logic Diagram

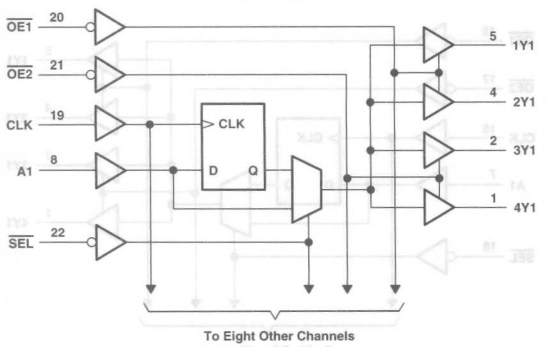

FUNCTION TABLE

INPUTS				OUTPUT
$\overline{OE}$	SEL	CLK	A	Y
H	X	X	X	Z
L	H	X	L	L
L	H	X	H	H
L	L	↑	L	L
L	L	↑	H	H

RECOMMENDED OPERATING CONDITIONS

PARAMETER	MAX or MIN	ALVCH 3V	UNIT
I_{CC}	MAX	0.04	mA
I_{OH}	MAX	-24	mA
I_{OL}	MAX	24	mA

SWITCHING CHARACTERISTICS

PARAMETER	INPUT	OUTPUT	MAX or MIN	ALVCH 3V
f_{max}			MIN	150
t_w Pulse duration	CLK high or low		MIN	3.3
t_{su} Setup time	A data before CLK ↑		MIN	1.6
t_h Hold time	A data after CLK ↑		MIN	1.1
t_{PLH}	A	Y	MAX	3.6
t_{PHL}				3.6
t_{PLH}	CLK	Y	MAX	3.9
t_{PHL}				3.9
t_{PLH}	$\overline{SEL}$	Y	MAX	4.4
t_{PHL}				4.4
t_{PZH}	$\overline{OE}$	Y	MAX	4.3
t_{PZL}				4.3
t_{PHZ}	$\overline{OE}$	Y	MAX	4.5
t_{PLZ}				4.5

UNIT fmax : MHz other : ns

PRODUCTION DATA information is current as of publication date. Products conform to specifications per the terms of Texas Instruments standard warranty. Production processing does not necessarily include testing of all parameters. See www.ti.com/sc/logic for the most current data sheets.

1-TO-4 ADDRESS REGISTER/DRIVER WITH 3-STATE OUTPUTS

Logic Diagram

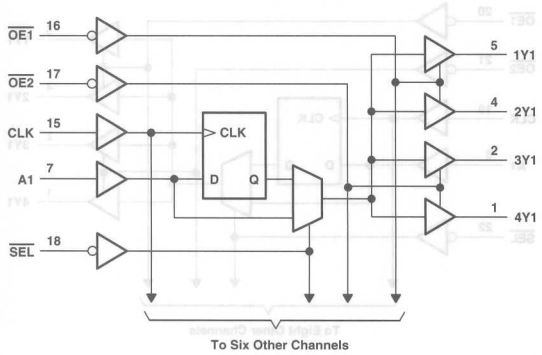

: OBSOLETED or NOT RECOMMENDED NEW DESIGNS

FUNCTION TABLE

INPUTS				OUTPUT
$\overline{OE}$	$\overline{SEL}$	CLK	A	Y
H	X	X	X	Z
L	H	X	L	L
L	H	X	H	H
L	L	↑	L	L
L	L	↑	H	H

RECOMMENDED OPERATING CONDITIONS

PARAMETER	MAX or MIN	ALVCH 3V	UNIT
I_{CC}	MAX	0.04	mA
I_{OH}	MAX	-24	mA
I_{OL}	MAX	24	mA

SWITCHING CHARACTERISTICS

PARAMETER	INPUT	OUTPUT	MAX or MIN	ALVCH 3V
f_{max}			MIN	150
t_w Pulse duration	CLK high or low		MIN	3.3
t_{su} Setup time	A data before CLK ↑		MIN	1.6
t_h Hold time	A data after CLK ↑		MIN	1.1
t_{PLH}	A	Y	MAX	3.6
t_{PHL}				3.6
t_{PLH}	CLK	Y	MAX	3.9
t_{PHL}				3.9
t_{PLH}	$\overline{SEL}$	Y	MAX	4.4
t_{PHL}				4.4
t_{PZH}	$\overline{OE}$	Y	MAX	4.3
t_{PZL}				4.3
t_{PHZ}	$\overline{OE}$	Y	MAX	4.5
t_{PLZ}				4.5

UNIT fmax : MHz other : ns

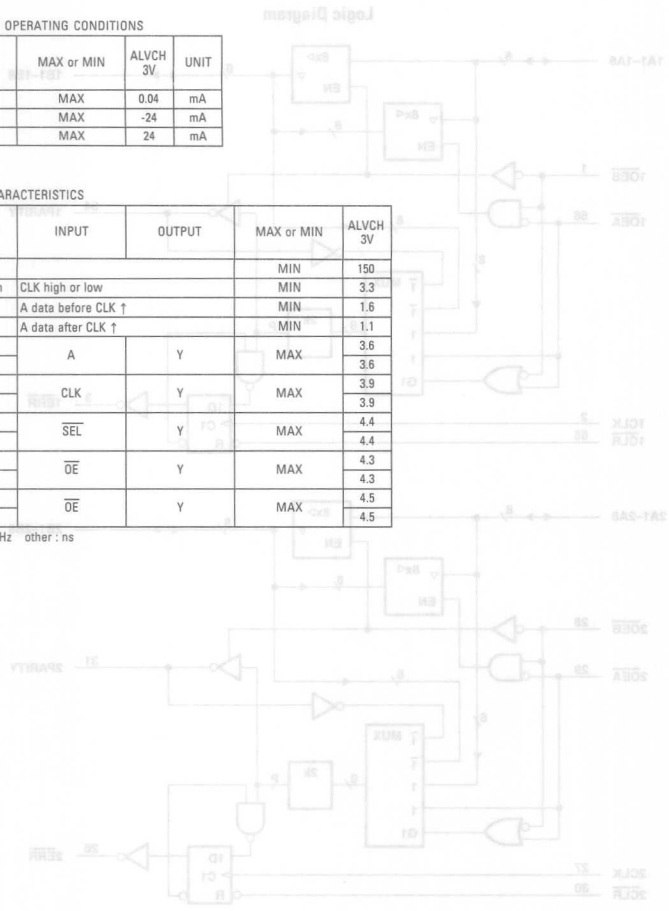

Logic Diagram

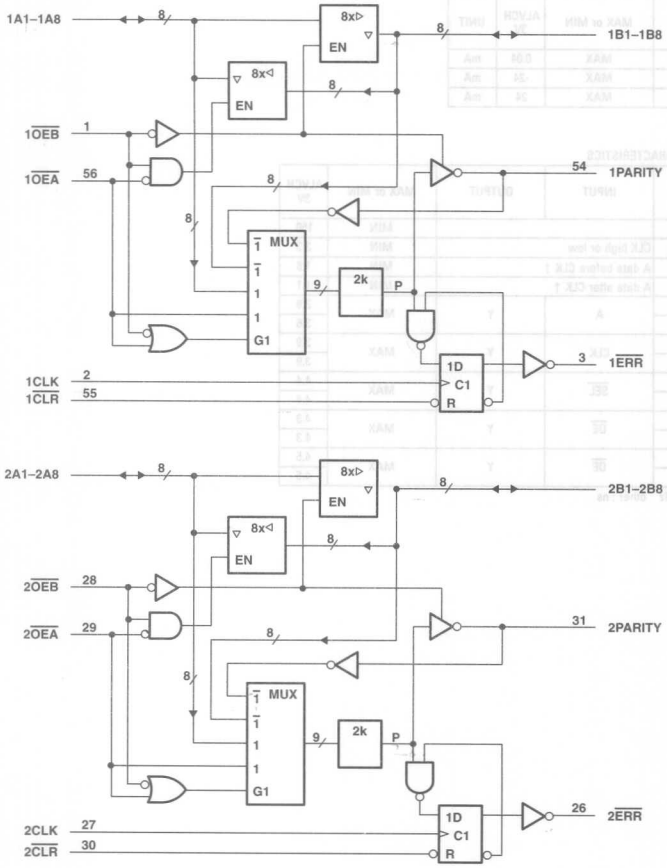

: OBSOLETED or NOT RECOMMENDED NEW DESIGNS

FUNCTION TABLE

H	H	L H H	No↑ ↑ ↑	X Odd Even	X	Z	Z	Z	NC H H L	Isolation§
L	L	X	X	Odd Even	NA	NA	A	H L	NA	A data to B bus and generate inverted parity

NA = not applicable, NC = no change, X = don't care
† Summation of high-level inputs includes PARITY along with BI inputs.
‡ Output states shown assume $\overline{ERR}$ was previously high.
§ In this mode, $\overline{ERR}$ (when clocked) shows inverted parrity of the A bus.

ERROE-FLAG FUNCTION TABLE

INPUTS		INTERNAL TO DEVICE	OUTPUT PRE-STATE	OUTPUT	FUNCTION
$\overline{CLR}$	CLK	POINT P	$\overline{ERR}_{n-1}$†	$\overline{ERR}$	
H	↑	H	H	H	Sample
H	↑	X	L	L	
H	↑	L	X	L	
L	X	X	X	H	Clear

† State of $\overline{ERR}$ before any changes at $\overline{CLR}$, CLK, or point P

RECOMMENDED OPERATING CONDITIONS

PARAMETER	MAX or MIN	ABT	ACT	UNIT
I_{CC}	MAX	36	0.08	mA
I_{OH}	MAX	-32	-24	mA
I_{OL}	MAX	64	24	mA

SWITCHING CHARACTERISTICS

PARAMETER	INPUT	OUTPUT	MAX or MIN	ABT	ACT
t_w Pulse duration	CLK high or low		MIN	3	4
	$\overline{CLR}$ low			-	4
t_{su} Setup time	A data before CLK ↑, A port		MIN	4..5	-
	A data before CLK ↑, $\overline{CLR}$			1	1.5
	A data before CLK ↑, $\overline{OEA}$			5	-
t_h Hold time	A data after CLK ↑, A port or $\overline{OEA}$		MIN	0	0
t_{PLH}	A or B	B or A	MAX	4.1	10.4
t_{PHL}				4.3	10.7
t_{PLH}	A	PARITY	MAX	6.7	13.5
t_{PHL}				6.1	13.8
t_{PZH}	$\overline{OEB}$ or $\overline{OEA}$	A or B	MAX	5.6	11.2
t_{PZL}				6	13
t_{PHZ}	$\overline{OEB}$ or $\overline{OEA}$	A or B	MAX	5.4	10.8
t_{PLZ}				4.3	10.1
t_{PLH}	CLK, $\overline{CLR}$	$\overline{ERR}$	MAX	4.6	15.8
t_{PHL}	CLK			3.9	11.6
t_{PLH}	$\overline{OEB}$	PARITY	MAX	6.7	-
t_{PHL}				6.1	-
t_{PLH}	$\overline{OEA}$	PARITY	MAX	6.7	13.2
t_{PHL}				6.1	13.6
t_{PZH}	$\overline{OEB}$	PARITY	MAX	5.7	9.5
t_{PZL}				6.5	10.7
t_{PHZ}	$\overline{OEB}$	PARITY	MAX	4.7	10.2
t_{PLZ}				4.1	9.7
t_{PZH}	$\overline{OEA}$	PARITY	MAX	5.7	-
t_{PZL}				6.5	-
t_{PHZ}	$\overline{OEA}$	PARITY	MAX	4.7	-
t_{PLZ}				4.1	-

UNIT: ns

16834

16-BIT UNIVERSAL BUS DRIVER WITH 3-STATE OUTPUTS

Logic Diagram

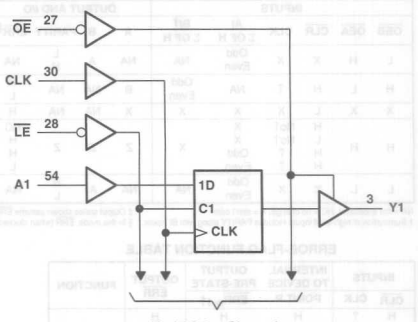

FUNCTION TABLE

INPUTS				OUTPUT
OE	LE	CLK	A	Y
H	X	X	X	Z
L	L	X	L	L
L	L	X	H	H
L	H	↑	L	L
L	H	↑	H	H
L	H	H	X	Y0†
L	H	L	X	Y0‡

† Output level before the indicated steady-state input conditions were established, provided that CLK is high before LE goes high
‡ Output level before the indicated steady-state input conditions were established

RECOMMENDED OPERATING CONDITIONS

PARAMETER	MAX or MIN	ALVC 3V	AVC 3V	UNIT
I_{CC}	MAX	0.04	0.04	mA
I_{OH}	MAX	-24	-12	mA
I_{OL}	MAX	24	12	mA

SWITCHING CHARACTERISTICS

PARAMETER	INPUT	OUTPUT	MAX or MIN	ALVC 3V	AVC 3V
f_{max}			MIN	150	150
t_w Pulse duration	LE low		MIN	3.3	3.3
	CLK high or low		MIN	3.3	3.3
t_{su} Setup time	Data before CLK ↑		MIN	1.7	0.7
	Data before LE ↑, CLK high		MIN	1.9	1
	Data before LE ↑, CLK low			1.5	1
t_h Hold time	A data after CLK ↑		MIN	0.7	0.9
	Data after LE ↑, CLK high		MIN	0.9	1.4
	Data after LE ↑, CLK low			0.9	1.3
t_{PLH}	A	Y	MAX	3.6	2.5
t_{PHL}				3.6	2.5
t_{PLH}	LE	Y	MAX	4.9	4
t_{PHL}				4.9	4
t_{PLH}	CLK	Y	MAX	4.6	3.1
t_{PHL}				4.6	3.1
t_{PZH}	OE	Y	MAX	5	6.2
t_{PZL}				5	6.2
t_{PHZ}	OE	Y	MAX	4.5	5.3
t_{PLZ}				4.5	5.3

UNIT fmax : MHz other : ns

: OBSOLETED or NOT RECOMMENDED NEW DESIGNS

16835

3.3-V ABT 18-BIT UNIVERSAL BUS DRIVER WITH 3-STATE OUTPUTS

Logic Diagram

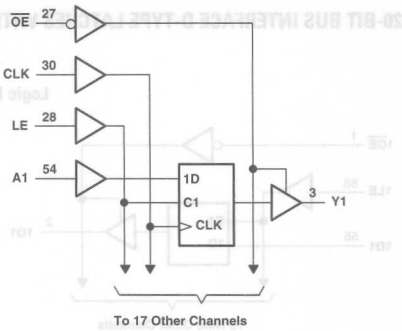

FUNCTION TABLE

INPUTS				OUTPUT
$\overline{OE}$	LE	CLK	A	Y
H	X	X	X	Z
L	H	X	L	L
L	H	X	H	H
L	L	↑	L	L
L	L	↑	H	H
L	L	H	X	Y_0†
L	L	L	X	Y_0‡

† Output level before the indicated steady-state input conditions were established, provided that CLK was high before LE went low.
‡ Output level before the indicated steady-state input conditions were established

RECOMMENDED OPERATING CONDITIONS

PARAMETER	MAX or MIN	LVTH 3V	ALVC 3V	ALVCH 3V	AVC 3V	UNIT
I_{CC}	MAX	5	0.04	0.04	0.04	mA
I_{OH}	MAX	-32	-24	-24	-12	mA
I_{OL}	MAX	64	24	24	12	mA

SWITCHING CHARACTERISTICS

PARAMETER	INPUT	OUTPUT	MAX or MIN	LVTH 3V	ALVC 3V	ALVCH 3V	AVC 3V
f_{max}			MIN	150	150	150	150
t_w Pulse duration	LE low		MIN	3.3	3.3	3.3	3.3
	CLK high or low		MIN	3.3	3.3	3.3	3.3
t_{su} Setup time	Data before CLK ↑		MIN	2.1	1.7	1.7	0.7
	Data before LE ↓, CLK high		MIN	2.3	1.5	1.5	0.8
	Data before LE ↓, CLK low		MIN	1.5	1	1	0.5
t_h Hold time	A data after CLK ↑		MIN	1	0.7	0.7	1.3
	Data after LE ↓, CLK high		MIN	0.8	1.4	1.4	1.6
	Data after LE ↓, CLK low		MIN	0.8	1.4	1.4	1.4
t_{PLH}	A	Y	MAX	3.7	3.6	3.6	2.5
t_{PHL}				3.7	3.6	3.6	2.5
t_{PLH}	LE	Y	MAX	5.1	4.2	4.2	3.8
t_{PHL}				5.1	4.2	4.2	3.8
t_{PLH}	CLK	Y	MAX	5.1	4.5	4.5	3.1
t_{PHL}				5.1	4.5	4.5	3.1
t_{PZH}	$\overline{OE}$	Y	MAX	4.6	4.6	4.6	6.2
t_{PZL}				4.6	4.6	4.6	6.2
t_{PHZ}	$\overline{OE}$	Y	MAX	5.8	3.9	3.9	5.3
t_{PLZ}				5.8	3.9	3.9	5.3

UNIT fmax : MHz other : ns

PRODUCTION DATA information is current as of publication date. Products conform to specifications per the terms of Texas Instruments standard warranty. Production processing does not necessarily include testing of all parameters. See www.ti.com/sc/logic for the most current data sheets.

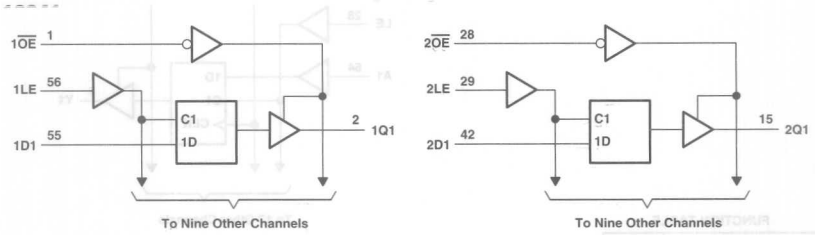

FUNCTION TABLE
(each 10-bit latch)

INPUTS			OUTPUT
$\overline{OE}$	LE	D	Q
L	H	H	H
L	H	L	L
L	L	X	Q_0
H	X	X	Z

RECOMMENDED OPERATING CONDITIONS

PARAMETER	MAX or MIN	ABT	ACT	ALVCH 3V	UNIT
I_{CC}	MAX	89	0.08	0.04	mA
I_{OH}	MAX	-32	-24	-24	mA
I_{OL}	MAX	64	24	24	mA

SWITCHING CHARACTERISTICS

PARAMETER	INPUT	OUTPUT	MAX or MIN	ABT	ACT	ALVCH 3V
t_w Pulse duration	LE high or low		MIN	4	4	3.3
t_{su} Setup time	Data before LE ↓		MIN	1	1.5	1.1
t_h Hold time	Data after LE ↓, high		MIN	2	3	1.1
	Data after LE ↓, low		MIN	2	4.5	1.1
t_{PLH}	D	Q	MAX	5	11.8	3.9
t_{PHL}				5.1	12.2	3.9
t_{PLH}	LE	Q	MAX	5	12.7	4.3
t_{PHL}				5	12.7	4.3
t_{PZH}	$\overline{OE}$	Q	MAX	5.7	11.3	4.9
t_{PZL}				5.6	13.7	4.9
t_{PHZ}	$\overline{OE}$	Q	MAX	6.5	10.2	4.1
t_{PLZ}				7.1	9.6	4.1

UNIT: ns

: OBSOLETED or NOT RECOMMENDED NEW DESIGNS

Logic Diagram

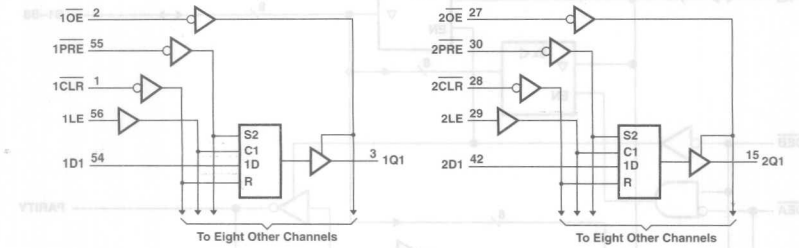

FUNCTION TABLE
(each 9-bit latch)

INPUTS					OUTPUT
PRE	CLR	OE	LE	D	Q
L	X	L	X	X	H
H	L	L	X	X	L
H	H	L	H	L	L
H	H	L	H	H	H
H	H	L	L	X	Q_0
X	X	H	X	X	Z

RECOMMENDED OPERATING CONDITIONS

PARAMETER	MAX or MIN	ABT	UNIT
I_{CC}	MAX	85	mA
I_{OH}	MAX	-32	mA
I_{OL}	MAX	64	mA

SWITCHING CHARACTERISTICS

PARAMETER	INPUT	OUTPUT	MAX or MIN	ABT
t_w Pulse duration	$\overline{CLR}$ low		MIN	3.3
	$\overline{PRE}$ low			3.3
	LE high			3.3
t_{su} Setup time	Data before LE ↓, high		MIN	0.9
	Data before LE ↓, low			0.6
t_h Hold time	Data after LE ↓, high		MIN	1.7
	Data after LE ↓, low			1.8
t_{PLH}	D	Q	MAX	4.8
t_{PHL}				4.8
t_{PLH}	LE	Q	MAX	5.9
t_{PHL}				5.3
t_{PLH}	$\overline{PRE}$	Q	MAX	6.1
t_{PHL}				5
t_{PLH}	$\overline{CLR}$	Q	MAX	5.4
t_{PHL}				6
t_{PZH}	OE	Q	MAX	5.4
t_{PZL}				5.8
t_{PHZ}	OE	Q	MAX	6.3
t_{PLZ}				5.2

UNIT: ns

PRODUCTION DATA information is current as of publication date. Products conform to specifications per the terms of Texas Instruments standard warranty. Production processing does not necessarily include testing of all parameters. See www.ti.com/sc/logic for the most current data sheets.

DUAL 8-BIT TO 9-BIT PARITY BUS TRANSCEIVERS

Logic Diagram

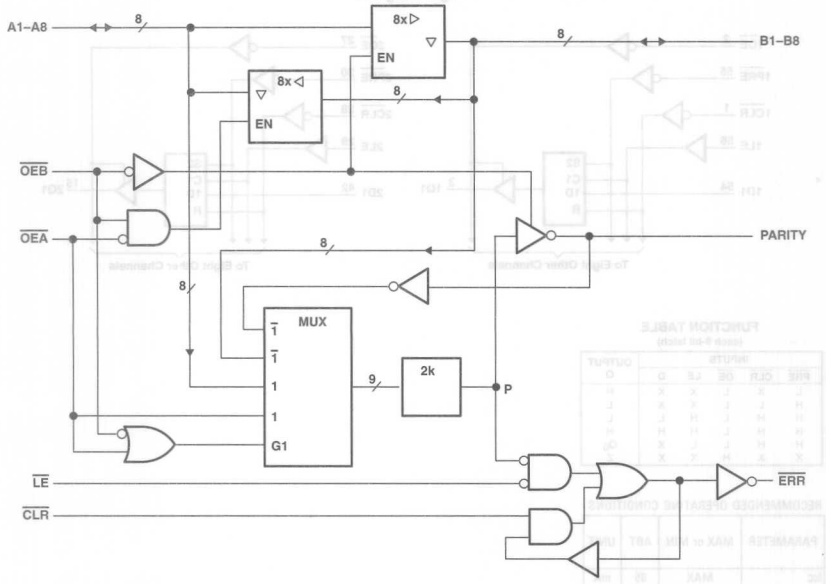

FUNCTION TABLE

INPUTS						OUTPUT AND I/Os				FUNCTION
$\overline{OEB}$	$\overline{OEA}$	$\overline{CLR}$	LE	AI Σ OF H	BI† Σ OF H	A	B	PARITY	$\overline{ERR}$‡	
L	H	X	X	Odd Even	NA	NA	A	L H	NA	A data to B bus and generate parity
H	L	H	L	NA	Odd Even	B	NA	NA	H L	B data to A bus and check parity
H	L	H	H	NA	X	X	NA	NA	NC	Store error flag
X	X	L	H	X	X	X	NA	NA	H	Clear error flag register
H	H	H L X X	H H L L	X X L Odd H Even	X	Z	Z	Z	NC H H L	Isolation§ (parity check)
L	L	X	X	Odd Even	NA	NA	A	H L	NA	A data to B bus and generate inverted parity

NA = not applicable, NC = no change, X = don't care
† Summation of high-level inputs includes PARITY along with Bi inputs.
‡ Output states shown assume $\overline{ERR}$ was previously high.
§ In this mode, $\overline{ERR}$ (when clocked) shows inverted parity of the A bus.

ERROR-FLAG FUNCTION TABLE

INPUTS		INTERNAL TO DEVICE	OUTPUT	OUTPUT $\overline{ERR}$	FUNCTION
$\overline{CLR}$	$\overline{LE}$	POINT P	ERR_{n-1}†		
L	L	L H	X	L H	Pass
H	L	L X H	X L H	L L H	Sample
L	H	X	X	H	Clear
H	H	X	L H	L H	Store

† State of $\overline{ERR}$ before changes at $\overline{CLR}$, $\overline{LE}$, or point P

RECOMMENDED OPERATING CONDITIONS

PARAMETER	MAX or MIN	ABT	UNIT
I_{CC}	MAX	40	mA
I_{OH}	MAX	-32	mA
I_{OL}	MAX	64	mA

SWITCHING CHARACTERISTICS

PARAMETER	INPUT	OUTPUT	MAX or MIN	ABT
t_w Pulse duration	$\overline{LE}$ high or low		MIN	8.5
	$\overline{CLR}$ low			4
t_{su} Setup time	A, B and PARITY before $\overline{LE}$ ↓		MIN	10
	$\overline{CLR}$ before $\overline{LE}$ ↓			0
t_h Hold time	A, B and PARITY after $\overline{LE}$ ↓		MIN	0
	$\overline{CLR}$ after $\overline{LE}$ ↓			0
t_{PLH}	A or B	B or A	MAX	4.1
t_{PHL}				4.3
t_{PLH}	A or $\overline{OE}$	PARITY	MAX	7.1
t_{PHL}				7.2
t_{PLH}	$\overline{CLR}$	$\overline{ERR}$	MAX	5.7
t_{PZH}	$\overline{OE}$	A or B	MAX	5.6
t_{PZL}				6
t_{PHZ}	$\overline{OE}$	A or B	MAX	5.4
t_{PLZ}				4.3
t_{PZH}	$\overline{OE}$	PARITY	MAX	5.7
t_{PZL}				6.5
t_{PHZ}	$\overline{OE}$	PARITY	MAX	4.7
t_{PLZ}				4.1
t_{PLH}	$\overline{LE}$	$\overline{ERR}$	MAX	4.8
t_{PHL}				4.9
t_{PLH}	A, B or PARITY	$\overline{ERR}$	MAX	7.2
t_{PHL}				7.4

UNIT: ns

16861

Logic Diagram

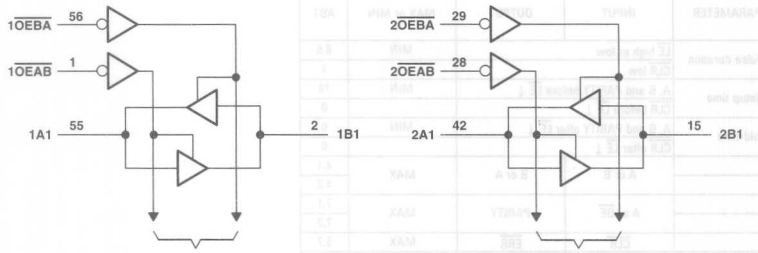

FUNCTION TABLE
(each 10-bit section)

INPUTS		OPERATION
$\overline{OEAB}$	$\overline{OEBA}$	
L	L	Latch A and B (A = B)
L	H	A to B
H	L	B to A
H	H	Isolation

RECOMMENDED OPERATING CONDITIONS

PARAMETER	MAX or MIN	ACT	UNIT
I_{CC}	MAX	0.08	mA
I_{OH}	MAX	-24	mA
I_{OL}	MAX	24	mA

SWITCHING CHARACTERISTICS

PARAMETER	INPUT	OUTPUT	MAX or MIN	ACT
t_{PLH}	A or B	B or A	MAX	10.4
t_{PHL}				11.1
t_{PZH}	$\overline{OEBA}$ or $\overline{OEAB}$	A or B	MAX	10
t_{PZL}				12.7
t_{PHZ}	$\overline{OEBA}$ or $\overline{OEAB}$	A or B	MAX	10.7
t_{PLZ}				10

UNIT: ns

18-BIT BUS TRANSCEIVERS WITH 3-STATE OUTPUTS

Logic Diagram

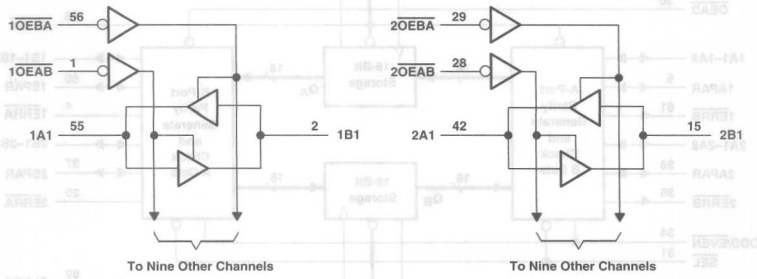

FUNCTION TABLE
(each 9-bit section)

INPUTS		OPERATION
$\overline{OEAB}$	$\overline{OEBA}$	
H	L	B data to A bus
L	H	A data to B bus
H	H	Isolation

RECOMMENDED OPERATING CONDITIONS

PARAMETER	MAX or MIN	ABT	ACT	ALVCH 3V	UNIT
I_{CC}	MAX	32	0.08	0.04	mA
I_{OH}	MAX	-32	-24	-24	mA
I_{OL}	MAX	64	24	24	mA

SWITCHING CHARACTERISTICS

PARAMETER	INPUT	OUTPUT	MAX or MIN	ABT	ACT	ALVCH 3V
t_{PLH}	A or B	B or A	MAX	3.5	11.1	3.4
t_{PHL}				3.9	11.8	3.4
t_{PZH}	$\overline{OEBA}$ or $\overline{OEAB}$	A or B	MAX	5.4	10.6	4.7
t_{PZL}				4.8	13.6	4.7
t_{PHZ}	$\overline{OEBA}$ or $\overline{OEAB}$	A or B	MAX	6	11.6	4.2
t_{PLZ}				5	11	4.2

UNIT: ns

PRODUCTION DATA information is current as of publication date. Products conform to specifications per the terms of Texas Instruments standard warranty. Production processing does not necessarily include testing of all parameters. See www.ti.com/sc/logic for the most current data sheets.

18-BIT UNIVERSAL BUS TRANSCEIVER WITH PARITY GENERATORS/CHECKERS

Block Diagram

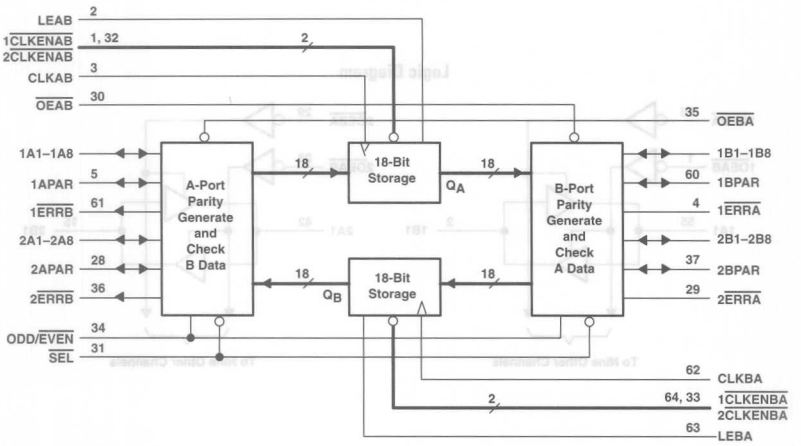

FUNCTION TABLE

INPUTS					OUTPUT
CLKENAB	OEAB	LEAB	CLKAB	A	B
X	H	X	X	X	Z
X	L	H	X	L	L
X	L	H	X	H	H
H	L	L	X	X	B_0‡
L	L	L	↑	L	L
L	L	L	↑	H	H
L	L	L	L	X	B_0‡
L	L	L	H	X	B_0§

‡ Output level before the indicated steady-state input conditions were established

§ Output level before the indicated steady-state input conditions were established, provided that CLKAB was low before LEAB went low

PARITY-ENABLE FUNCTION TABLE

INPUTS			OPERATION OR FUNCTION	
SEL	OEBA	OEAB		
L	H	L	Parity is checked on port A and is generated on port B.	
L	L	H	Parity is checked on port B and is generated on port A.	
L	H	H	Parity is checked on port B and port A.	
L	L	L	Parity is generated on port A and B if device is in FF mode.	
H	L	L	Parity funcions are disabled; device acts as a standard 18-bit registered transceiver.	Q_A data to B, Q_B data to A
H	L	H		Q_B data to A
H	H	L		Q_A data to B
H	H	H		Isolation

PARITY FUNCTION TABLE

INPUTS								OUTPUTS			
SEL	OEBA	OEAB	ODD/EVEN	Σ OF INPUTS A1-A8 = H	Σ OF INPUTS B1-B8 = H	APAR	BPAR	APAR	ERRA	BPAR	ERRB
L	H	L	L	0, 2, 4, 6, 8	N/A	L	N/A	N/A	H	L	Z
L	H	L	L	1, 3, 5, 7	N/A	L	N/A	N/A	L	H	Z
L	H	L	L	0, 2, 4, 6, 8	N/A	H	N/A	N/A	L	L	Z
L	H	L	L	1, 3, 5, 7	N/A	H	N/A	N/A	H	H	Z
L	L	H	L	N/A	0, 2, 4, 6, 8	N/A	L	L	Z	N/A	H
L	L	H	L	N/A	1, 3, 5, 7	N/A	L	H	Z	N/A	L
L	L	H	L	N/A	0, 2, 4, 6, 8	N/A	H	L	Z	N/A	L
L	L	H	L	N/A	1, 3, 5, 7	N/A	H	H	Z	N/A	H
L	H	L	H	0, 2, 4, 6, 8	N/A	L	N/A	N/A	L	H	Z
L	H	L	H	1, 3, 5, 7	N/A	L	N/A	N/A	H	L	Z
L	H	L	H	0, 2, 4, 6, 8	N/A	H	N/A	N/A	H	H	Z
L	H	L	H	1, 3, 5, 7	N/A	H	N/A	N/A	L	L	Z
L	L	H	H	N/A	0, 2, 4, 6, 8	N/A	L	H	Z	N/A	L
L	L	H	H	N/A	1, 3, 5, 7	N/A	L	L	Z	N/A	H
L	L	H	H	N/A	0, 2, 4, 6, 8	N/A	H	H	Z	N/A	H
L	L	H	H	N/A	1, 3, 5, 7	N/A	H	L	Z	N/A	L
L	H	H	L	0, 2, 4, 6, 8	0, 2, 4, 6, 8	L	L	Z	H	Z	H
L	H	H	L	1, 3, 5, 7	1, 3, 5, 7	L	L	Z	L	Z	L
L	H	H	L	0, 2, 4, 6, 8	0, 2, 4, 6, 8	H	H	Z	L	Z	L
L	H	H	L	1, 3, 5, 7	1, 3, 5, 7	H	H	Z	H	Z	H
L	H	H	H	0, 2, 4, 6, 8	0, 2, 4, 6, 8	L	L	Z	L	Z	L
L	H	H	H	1, 3, 5, 7	1, 3, 5, 7	L	L	Z	H	Z	H
L	H	H	H	0, 2, 4, 6, 8	0, 2, 4, 6, 8	H	H	Z	H	Z	H
L	H	H	H	1, 3, 5, 7	1, 3, 5, 7	H	H	Z	L	Z	L
L	L	L	L	N/A	N/A	N/A	N/A	PE†	Z	PE†	Z
L	L	L	H	N/A	N/A	N/A	N/A	PO‡	Z	PO‡	Z

† Parity output is set to the level so that the specific bus side is set to even parity.

‡ Parity output is set to the level so that the specific bus side is set to odd parity.

RECOMMENDED OPERATING CONDITIONS

PARAMETER	MAX or MIN	LVCH 3V	ALVCH 3V	UNIT
I_{CC}	MAX	0.02	0.04	mA
I_{OH}	MAX	-24	-24	mA
I_{OL}	MAX	24	24	mA

SWITCHING CHARACTERISTICS

PARAMETER	INPUT	OUTPUT	MAX or MIN	LVCH 3V	ALVCH 3V
f_{max}			MIN	125	125
t_w Pulse duration	CLK ↑		MIN	3	3
	LE high		MIN	3	3
t_{su} Setup time	A, APAR or B, BPAR before CLK ↑		MIN	2.5	1.7
	$\overline{CLKEN}$ before CLK ↑		MIN	2.5	1.7
	A, APAR or B, BPAR before LE ↓		MIN	2	1.2
t_h Hold time	A, APAR or B, BPAR after CLK ↑		MIN	1.3	0.5
	$\overline{CLKEN}$ after CLK ↑		MIN	1.5	0.7
	A, APAR or B, BPAR after LE ↓		MIN	1.7	0.9
t_{PLH}	A or B	B or A	MAX	5.4	4.4
t_{PHL}				5.4	4.4
t_{PLH}	A or B	BPAR or APAR	MAX	7.7	6.7
t_{PHL}				7.7	6.7
t_{PLH}	APAR or BPAR	BPAR or APAR	MAX	5.7	4.7
t_{PHL}				5.7	4.7
t_{PLH}	APAR or BPAR	$\overline{ERRA}$ or $\overline{ERRB}$	MAX	8.5	7.5
t_{PHL}				8.5	7.5
t_{PLH}	ODD / $\overline{EVEN}$	$\overline{ERRA}$ or $\overline{ERRB}$	MAX	7.8	6.8
t_{PHL}				7.8	6.8
t_{PLH}	ODD / $\overline{EVEN}$	BPAR or APAR	MAX	7.5	6.5
t_{PHL}				7.5	6.5
t_{PLH}	$\overline{SEL}$	BPAR or APAR	MAX	6.1	5.1
t_{PHL}				6.1	5.1
t_{PLH}	CLKAB or CLKBA	A or B	MAX	6.1	5.1
t_{PHL}				6.1	5.1
t_{PLH}	CLKAB or CLKBA	BPAR or APAR parity feedthrough	MAX	6.6	5.6
t_{PHL}				6.6	5.6
t_{PLH}	CLKAB or CLKBA	BPAR or APAR parity generated	MAX	8.7	7.7
t_{PHL}				8.7	7.7
t_{PLH}	CLKAB or CLKBA	$\overline{ERRA}$ or $\overline{ERRB}$	MAX	8.9	7.9
t_{PHL}				8.9	7.9
t_{PLH}	LEAB or LEBA	A or B	MAX	5.8	4.8
t_{PHL}				5.8	4.8
t_{PLH}	LEAB or LEBA	BPAR or APAR parity feedthrough	MAX	6.3	5.3
t_{PHL}				6.3	5.3
t_{PLH}	LEAB or LEBA	BPAR or APAR parity generated	MAX	8.4	7.4
t_{PHL}				8.4	7.4
t_{PLH}	LEAB or LEBA	$\overline{ERRA}$ or $\overline{ERRB}$	MAX	8.5	7.5
t_{PHL}				8.5	7.5
t_{PZH}	$\overline{OEAB}$ or $\overline{OEBA}$	B, BPAR or A, APAR	MAX	6.3	5.3
t_{PZL}				6.3	5.3
t_{PHZ}	$\overline{OEAB}$ or $\overline{OEBA}$	B, BPAR or A, APAR	MAX	5.9	4.9
t_{PLZ}				5.9	4.9
t_{PZH}	$\overline{OEAB}$ or $\overline{OEBA}$	$\overline{ERRA}$ or $\overline{ERRB}$	MAX	5.9	4.9
t_{PZL}				5.9	4.9
t_{PHZ}	$\overline{OEAB}$ or $\overline{OEBA}$	$\overline{ERRA}$ or $\overline{ERRB}$	MAX	6.7	5.7
t_{PLZ}				6.7	5.7
t_{PZH}	$\overline{SEL}$	$\overline{ERRA}$ or $\overline{ERRB}$	MAX	6.5	5.5
t_{PZL}				6.5	5.5
t_{PHZ}	$\overline{SEL}$	$\overline{ERRA}$ or $\overline{ERRB}$	MAX	5.9	4.9
t_{PLZ}				5.9	4.9

UNIT fmax : MHz other : ns

Logic Diagram

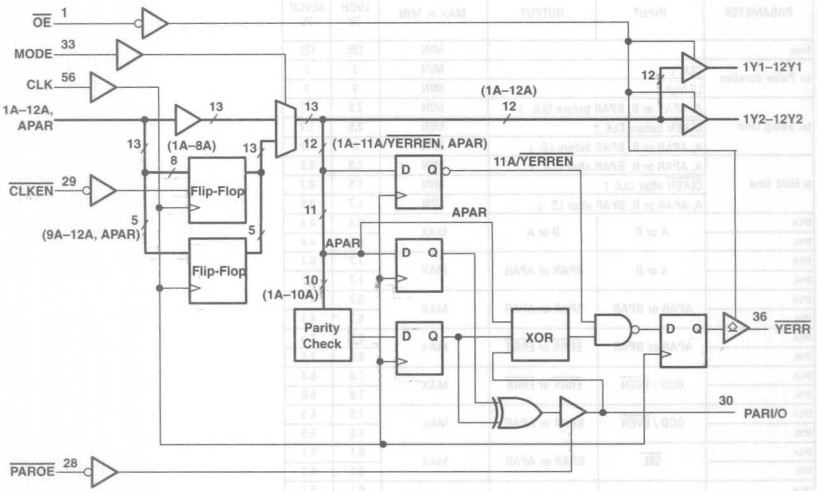

FUNCTION TABLE

INPUTS					OUTPUTS	
OE	MODE	CLKEN	CLK	A	$1Y_n$† – $8Y_n$†	$9Y_n$† – $12Y_n$†
L	L	L	↑	H	H	H
L	L	L	↑	L	L	L
L	L	H	↑	H	Y_0	H
L	L	H	↑	L	Y_0	L
L	H	X	X	H	H	H
L	H	X	X	L	L	L
H	X	X	X	X	Z	Z

†$_n$ = 1, 2

PARI/O FUNCTION†

INPUTS			OUTPUT
PAROE	Σ OF INPUTS 1A – 10A = H	APAR	PARI/O
L	0, 2, 4, 6, 8, 10	L	L
L	1, 3, 5, 7, 9	L	H
L	0, 2, 4, 6, 8, 10	H	H
L	1, 3, 5, 7, 9	H	L
H	X	X	Z

† This table applies to the first device of a cascaded pair of ALVCH16903 devices.

PARITY FUNCTION

INPUTS						OUTPUT
OE	PAROE‡	11A/YERRENS	PARI/O	Σ OF INPUTS 1A – 10A = H	APAR	YERR
L	H	L	L	0, 2, 4, 6, 8, 10	L	H
L	H	L	L	1, 3, 5, 7, 9	L	L
L	H	L	L	0, 2, 4, 6, 8, 10	H	L
L	H	L	L	1, 3, 5, 7, 9	H	H
L	H	L	H	0, 2, 4, 6, 8, 10	L	L
L	H	L	H	1, 3, 5, 7, 9	L	H
L	H	L	H	0, 2, 4, 6, 8, 10	H	H
L	H	L	H	1, 3, 5, 7, 9	H	L
H	X	X	X	X	X	H
L	X	H	X	X	X	H

‡ When used as a single device, PAROE must be tied high.
§ Valid after appropriate number of clock pulses have set internal register.

SWITCHING CHARACTERISTICS

PARAMETER		INPUT	OUTPUT	MAX or MIN	ALVCH 3V
f_{max}				MIN	125
t_w Pulse duration		CLK ↑		MIN	3
t_{su} Setup time		1A-12A before CLK ↑, resister mode		MIN	1.45
		1A-10A before CLK ↑, buffer mode		MIN	4.4
		APAR before CLK ↑, resister mode		MIN	1.3
		APAR before CLK ↑, buffer mode		MIN	3.1
		PARI/O before CLK ↑, both mode		MIN	1.7
		11A/$\overline{\text{YERREN}}$ before CLK ↑, buffer mode		MIN	1.6
		$\overline{\text{CLKEN}}$ before CLK ↑, resister mode		MIN	2.2
t_h Hold time		1A-12A after CLK ↑, resister mode		MIN	0.55
		1A-10A after CLK ↑, buffer mode		MIN	0.25
		APAR after CLK ↑, resister mode		MIN	0.7
		APAR after CLK ↑, buffer mode		MIN	0.25
		PARI/O before CLK ↑, resister mode		MIN	0.4
		PARI/O before CLK ↑, buffer mode		MIN	0.5
		11A/$\overline{\text{YERREN}}$ after CLK ↑, buffer mode		MIN	0.4
		$\overline{\text{CLKEN}}$ after CLK ↑, resister mode		MIN	0.4
t_{PLH}	Buffer mode	A	Y	MAX	3.8
t_{PHL}					3.8
t_{PLH}	Both mode	CLK	$\overline{\text{YERR}}$	MAX	4.4
t_{PHL}					4.4
t_{PLH}	Both mode	CLK	PARI / O	MAX	6.6
t_{PHL}					6.6
t_{PLH}	Both mode	MODE	Y	MAX	4.9
t_{PHL}					4.9
t_{PLH}	Resister mode	CLK	Y	MAX	4.8
t_{PHL}					4.6
t_{PZH}	Both mode	$\overline{\text{OE}}$	Y	MAX	5.4
t_{PZL}					5.4
t_{PZH}	Both mode	$\overline{\text{PAROE}}$	PARI / O	MAX	4.8
t_{PZL}					4.8
t_{PHZ}	Both mode	$\overline{\text{OE}}$	Y	MAX	5
t_{PLZ}					5
t_{PHZ}	Both mode	$\overline{\text{PAROE}}$	PARI / O	MAX	3.8
t_{PLZ}					3.8
t_{PLH}	Both mode	$\overline{\text{OE}}$	$\overline{\text{YERR}}$	MAX	4
t_{PHL}					4.2

UNIT fmax : MHz other : ns

PRODUCTION DATA information is current as of publication date. Products conform to specifications per the terms of Texas Instruments standard warranty. Production processing does not necessarily include testing of all parameters. See www.ti.com/sc/logic for the most current data sheets.

Logic Diagram

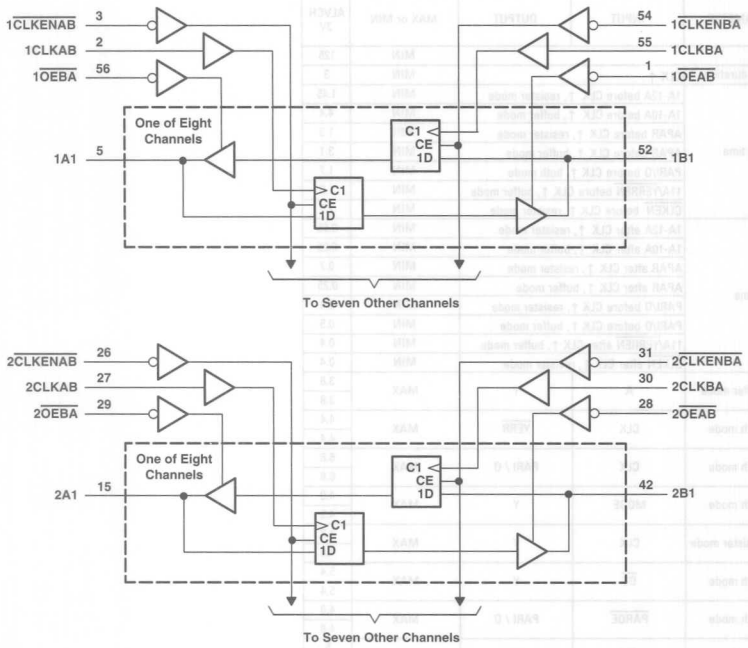

: OBSOLETED or NOT RECOMMENDED NEW DESIGNS

FUNCTION TABLE

INPUTS				OUTPUT
CLKENAB	CLKAB	OEAB	A	B
H	X	L	X	B_0‡
X	L	L	X	B_0‡
L	↑	L	L	L
L	↑	L	H	H
H	X	H	X	Z

† A-to-B data flow is shown; B-to-A data flow is similar but uses $\overline{\text{CLKENBA}}$, CLKBA, and $\overline{\text{OEBA}}$.
‡ Level of B before the indicated steady-state input conditions were established.

RECOMMENDED OPERATING CONDITIONS

PARAMETER	MAX or MIN	ABT	AC	LVTH 3V	LVCH 3V	ALVCH 3V	UNIT
I_{CC}	MAX	35	0.08	5	0.02	0.04	mA
I_{OH}	MAX	-32	-24	-32	-24	-24	mA
I_{OL}	MAX	64	24	64	24	24	mA

SWITCHING CHARACTERISTICS

PARAMETER	INPUT	OUTPUT	MAX or MIN	ABT	AC	LVTH 3V	LVCH 3V	ALVCH 3V
f_{max}			MIN	150	75	150	150	150
t_w Pulse duration	$\overline{\text{CLKEN}}$ high		MIN	-	-	-	-	3.3
	CLK high or low			3.3	6.7	3.3	3.3	3.3
t_{su} Setup time	Data before CLK		MIN	3.5	5	1.7	2.8	1.5
	$\overline{\text{CLKEN}}$ before CLK			3	6.5	2	1.4	1
t_h Hold time	Data after CLK		MIN	1	1	0.8	0.5	0.8
	$\overline{\text{CLKEN}}$ after CLK			1	0	0.4	1.9	1.1
t_{PLH}	CLK	A or B	MAX	4.3	11.8	4.4	6.6	3.9
t_{PHL}				4.5	11.7	4.4	6.6	3.9
t_{PZH}	$\overline{\text{OEBA}}$ or $\overline{\text{OEAB}}$	A or B	MAX	4.6	11.2	4.9	6.6	4.4
t_{PZL}				6	13	4.9	6.6	4.4
t_{PHZ}	$\overline{\text{OEBA}}$ or $\overline{\text{OEAB}}$	A or B	MAX	5.5	9.4	6.2	6.7	4
t_{PLZ}				4.2	8.7	5.3	6.7	4

UNIT fmax : MHz other : ns

25244

Generated by the Simultaneous Switching of Outputs

Logic Diagram

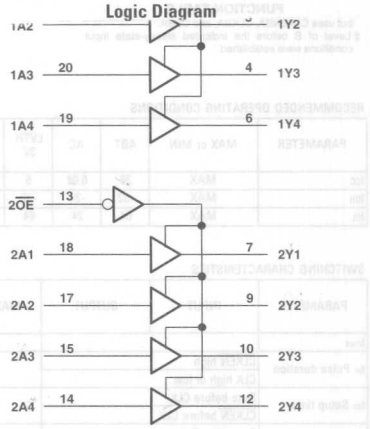

FUNCTION TABLE
(each buffer/driver)

INPUTS		OUTPUT
$\overline{OE}$	A	Y
L	H	H
L	L	L
H	X	Z

RECOMMENDED OPERATING CONDITIONS

PARAMETER	MAX or MIN	SN74 BCT	SN64 BCT	UNIT
I_{CC}	MAX	119	119	mA
I_{OH}	MAX	-80	-80	mA
I_{OL}	MAX	188	188	mA

SWITCHING CHARACTERISTICS

PARAMETER	INPUT	OUTPUT	MAX or MIN	SN74 BCT	SN64 BCT
t_{PLH}	A	Y	MAX	5.5	5.5
t_{PHL}				6	6.3
t_{PZH}	$\overline{OE}$	Y	MAX	9.3	9.7
t_{PZL}				10.2	10.4
t_{PHZ}	$\overline{OE}$	Y	MAX	6.3	6.5
t_{PLZ}				8.4	9.5

UNIT: ns

Outputs

Logic Diagram

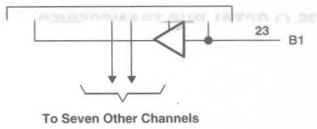

FUNCTION TABLE

INPUTS		OPERATION
$\overline{OE}$	DIR	
L	L	B data to A bus
L	H	A data to B bus
H	X	Isolation

RECOMMENDED OPERATING CONDITIONS

PARAMETER	MAX or MIN	SN74 BCT	ABTH	UNIT
I_{CC}	MAX	125	20	mA
I_{OH} (A port)	MAX	-80	-80	mA
I_{OH} (B port)	MAX	-3	-32	mA
I_{OL} (A port)	MAX	188	188	mA
I_{OL} (B port)	MAX	24	64	mA

SWITCHING CHARACTERISTICS

PARAMETER	INPUT	OUTPUT	MAX or MIN	SN74 BCT	ABTH
t_{PLH}	A	B	MAX	5.7	3.9
t_{PHL}				7.2	4.3
t_{PLH}	B	A	MAX	5.5	3.9
t_{PHL}				6.2	4.3
t_{PZH}	$\overline{OE}$	A	MAX	9.6	6.5
t_{PZL}				10.3	6.8
t_{PHZ}	$\overline{OE}$	A	MAX	6.2	7.2
t_{PLZ}				8.3	6.4
t_{PZH}	$\overline{OE}$	B	MAX	8.9	6.5
t_{PZL}				9.7	6.8
t_{PHZ}	$\overline{OE}$	B	MAX	6.9	7.2
t_{PLZ}				7.5	6.4

UNIT: ns

PRODUCTION DATA information is current as of publication date. Products conform to specifications per the terms of Texas Instruments standard warranty. Production processing does not necessarily include testing of all parameters. See www.ti.com/sc/logic for the most current data sheets.

25642

25-Ω OCTAL BUS TRANSCEIVER

- High Output Drive Current
- Distributed V_{CC} and GND Pins Minimize Noise Generated by the Simultaneous Switching of Outputs

Logic Diagram

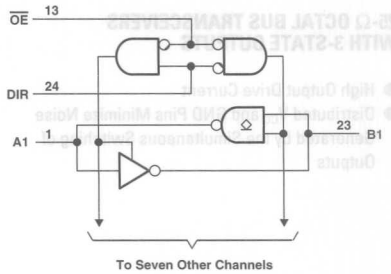

FUNCTION TABLE

INPUTS		OPERATION
$\overline{OE}$	DIR	
L	L	$\overline{B}$ data to A bus
L	H	$\overline{A}$ data to B bus
H	X	Isolation

RECOMMENDED OPERATING CONDITIONS

PARAMETER	MAX or MIN	SN74 BCT	UNIT
I_{CC}	MAX	125	mA
I_{OH} (B port)	MAX	-3	mA
I_{OL} (A port)	MAX	188	mA
I_{OL} (B port)	MAX	24	mA
V_{OH} (A port)	MAX	5.5	V

SWITCHING CHARACTERISTICS

PARAMETER	INPUT	OUTPUT	MAX or MIN	SN74 BCT
t_{PLH}	A	B	MAX	6.2
t_{PHL}				4
t_{PLH}	B	A	MAX	6.3
t_{PHL}				5.9
t_{PLH}	$\overline{OE}$	A	MAX	11.6
t_{PHL}				11.3
t_{PZH}	$\overline{OE}$	B	MAX	9.1
t_{PZL}				9.8
t_{PHZ}	$\overline{OE}$	B	MAX	7.3
t_{PLZ}				7.3

UNIT: ns

: OBSOLETED or NOT RECOMMENDED NEW DESIGNS

29821

10-BIT BUS-INTERFACE FLIP-FLOPS WITH 3-STATE OUTPUTS

- 3-State Outputs
- Data Flow-Through Pinout

Logic Diagram

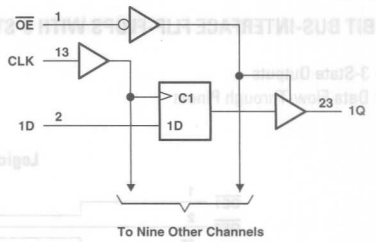

FUNCTION TABLE
(each flip-flop)

INPUTS			OUTPUT
$\overline{OE}$	CLK	D	Q
L	↑	H	H
L	↑	L	L
L	H or L	X	Q_0
H	X	X	Z

RECOMMENDED OPERATING CONDITIONS

PARAMETER	MAX or MIN	ALS	SN74 BCT	UNIT
I_{CC}	MAX	115	35	mA
I_{OH}	MAX	-24	-24	mA
I_{OL}	MAX	48	48	mA

SWITCHING CHARACTERISTICS

PARAMETER	INPUT	OUTPUT	MAX or MIN	ALS	SN74 BCT
f_{max}			-	-	125
t_w Pulse duration	CLK high or low		MIN	7	7
t_{su} Setup time	Data before CLK ↑		MIN	4	7
t_h Hold time	Data after CLK ↑		MIN	2	1
t_{PLH}	CLK	Q	MAX	10	12
t_{PHL}				10	10
t_{PZH}	$\overline{OE}$	Q	MAX	14	12
t_{PZL}				14	13
t_{PHZ}	$\overline{OE}$	Q	MAX	14	8
t_{PLZ}				12	8

UNIT fmax : MHz other : ns

PRODUCTION DATA information is current as of publication date. Products conform to specifications per the terms of Texas Instruments standard warranty. Production processing does not necessarily include testing of all parameters. See www.ti.com/sc/logic for the most current data sheets.

Logic Diagram

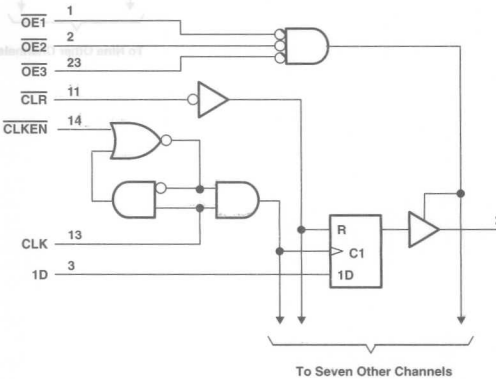

FUNCTION TABLE

INPUTS					OUTPUT
$\overline{OE}$†	$\overline{CLR}$	$\overline{CLKEN}$	CLK	D	Q
L	L	X	X	X	L
L	H	L	↑	H	H
L	H	L	↑	L	L
L	H	H	H or L	X	Q_0
H	X	X	X	X	Z

† $\overline{OE}$ = H if any of the output-enable inputs is high.
$\overline{OE}$ = L if all of the output-enable inputs are low.

RECOMMENDED OPERATING CONDITIONS

PARAMETER	MAX or MIN	SN74 BCT	UNIT
I_{CC}	MAX	40	mA
I_{OH}	MAX	-24	mA
I_{OL}	MAX	48	mA

SWITCHING CHARACTERISTICS

PARAMETER	INPUT	OUTPUT	MAX or MIN	SN74 BCT
f_{max}			MIN	125
t_w Pulse duration	$\overline{CLK}$ low		MIN	4
	CLK high or low		MIN	4
t_{su} Setup time	Before CLK ↑, data high		MIN	6
	Before CLK ↑, data low		MIN	3.5
	$\overline{CLR}$		MIN	1
	$\overline{CLKEN}$ before CLK ↑		MIN	8
t_h Hold time	After CLK ↑, data high		MIN	1.5
	After CLK ↑, data low		MIN	0
	$\overline{CLKEN}$ after CLK ↑		MIN	0.5
t_{PLH}	CLK	Q	MAX	9
t_{PHL}				8.4
t_{PHL}	$\overline{CLR}$	Q	MAX	9.5
t_{PZH}	$\overline{OE}$	Q	MAX	10.3
t_{PZL}				10.2
t_{PHZ}	$\overline{OE}$	Q	MAX	9
t_{PLZ}				8.2

UNIT fmax : MHz other : ns

▭ : OBSOLETED or NOT RECOMMENDED NEW DESIGNS

- 3-State Outputs
- Data Flow-Through Pinout

Logic Diagram

To Nine Other Channels

FUNCTION TABLE

INPUT			OUTPUT
$\overline{OE1}$	$\overline{OE2}$	A	Y
L	L	L	L
L	L	H	H
L	X	X	Z
H	H	X	Z

†n = 1,2

RECOMMENDED OPERATING CONDITIONS

PARAMETER	MAX or MIN	ALS	SN74 BCT	UNIT
I_{CC}	MAX	40	40	mA
I_{OH}	MAX	-24	-24	mA
I_{OL}	MAX	48	48	mA

SWITCHING CHARACTERISTICS

PARAMETER	INPUT	OUTPUT	MAX or MIN	ALS	SN74 BCT
t_{PLH}	A	Y	MAX	7	5.5
t_{PHL}				7.5	7.5
t_{PZH}	$\overline{OE}$	Y	MAX	15	9.1
t_{PZL}				15	12.8
t_{PHZ}	$\overline{OE}$	Y	MAX	17	8.8
t_{PLZ}				12	8.4

UNIT: ns

PRODUCTION DATA information is current as of publication date. Products conform to specifications per the terms of Texas Instruments standard warranty. Production processing does not necessarily include testing of all parameters. See www.ti.com/sc/logic for the most current data sheets.

29828

10-BIT BUFFERS AND BUS DRIVERS WITH 3-STATE OUTPUTS

- pnp Inputs Reduce dc Loading
- 3-State Outputs
- Data Flow-Through Pinout

Logic Diagram

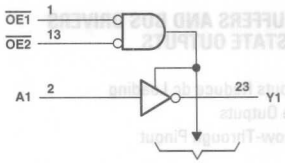

RECOMMENDED OPERATING CONDITIONS

PARAMETER	MAX or MIN	ALS	UNIT
I_{CC}	MAX	40	mA
I_{OH}	MAX	-24	mA
I_{OL}	MAX	48	mA

SWITCHING CHARACTERISTICS

PARAMETER	INPUT	OUTPUT	MAX or MIN	ALS
t_{PLH}	A	Y	MAX	7
t_{PHL}				7.5
t_{PZH}	$\overline{OE}$	Y	MAX	15
t_{PZL}				15
t_{PHZ}	$\overline{OE}$	Y	MAX	17
t_{PLZ}				12

UNIT: ns

NOTICE : ALS IS NOT RECOMMENDED FOR NEW DESIGNS

: OBSOLETED or NOT RECOMMENDED NEW DESIGNS

29841

10-BIT BUS INTERFACE D-TYPE LATCHES WITH 3-STATE OUTPUTS

- 3-State Outputs
- Data Flow-Through Pinout

Logic Diagram

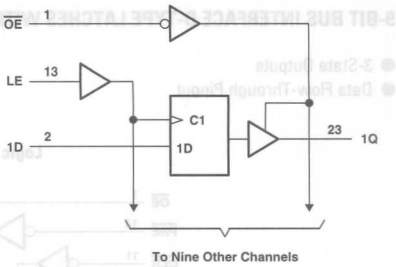

FUNCTION TABLE

INPUTS			OUTPUT
$\overline{OE}$	LE	D	Q
L	H	H	H
L	H	L	L
L	L	X	Q_0
H	X	X	Z

RECOMMENDED OPERATING CONDITIONS

PARAMETER	MAX or MIN	ALS	SN74 BCT	UNIT
I_{CC}	MAX	85	35	mA
I_{OH}	MAX	-24	-24	mA
I_{OL}	MAX	48	48	mA

SWITCHING CHARACTERISTICS

PARAMETER	INPUT	OUTPUT	MAX or MIN	ALS	SN74 BCT
t_w Pulse duration	LE high or low		MIN	6	4
t_{su} Setup time	Data beforeLE ↓		MIN	2.5	2
t_h Hold time	Data after LE ↓, high		MIN	4.5	1.5
	Data after LE ↓, low		MIN	4.5	3.5
t_{PLH}	D	Q	MAX	9.5	7.5
t_{PHL}				9.5	8.6
t_{PLH}	LE	Q	MAX	12	8.6
t_{PHL}				12	8.1
t_{PZH}	$\overline{OE}$	Q	MAX	14	9.2
t_{PZL}				14	12.8
t_{PHZ}	$\overline{OE}$	Q	MAX	15	6.9
t_{PLZ}				12	6.9

UNIT: ns

PRODUCTION DATA information is current as of publication date. Products conform to specifications per the terms of Texas Instruments standard warranty. Production processing does not necessarily include testing of all parameters. See www.ti.com/sc/logic for the most current data sheets.

Logic Diagram

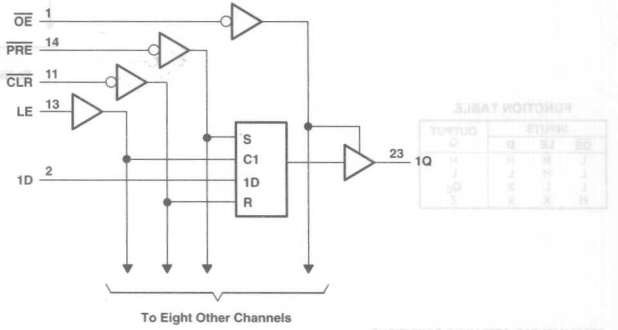

: OBSOLETED or NOT RECOMMENDED NEW DESIGNS

FUNCTION TABLE

INPUTS					OUTPUT
$\overline{PRE}$	$\overline{CLR}$	$\overline{OE}$	LE	D	Q
L	X	L	X	X	H
H	L	L	X	X	L
H	H	L	H	L	L
H	H	L	H	H	H
H	H	L	L	X	Q_0
X	X	H	X	X	Z

RECOMMENDED OPERATING CONDITIONS

PARAMETER	MAX or MIN	SN74 BCT	UNIT
I_{CC}	MAX	35	mA
I_{OH}	MAX	-24	mA
I_{OL}	MAX	48	mA

SWITCHING CHARACTERISTICS

PARAMETER	INPUT	OUTPUT	MAX or MIN	SN74 BCT
t_w Pulse duration	$\overline{PRE}$ low		MIN	7
	$\overline{CLR}$ low			5
	LE high			4
t_{su} Setup time	Data before LE ↓, high or low		MIN	1.5
	$\overline{PRE}$ or $\overline{CLR}$ inactive			2
t_h Hold time	Data after LE ↓, high or low		MIN	3.5
t_{PLH}	$\overline{D}$	Q	MAX	8
t_{PHL}				9
t_{PLH}	LE	Q	MAX	10
t_{PHL}				10
t_{PLH}	$\overline{PRE}$	Q	MAX	12
t_{PHL}				12
t_{PLH}	$\overline{CLR}$	Q	MAX	12
t_{PHL}				12
t_{PZH}	$\overline{OE}$	Q	MAX	15
t_{PZL}				15
t_{PHZ}	$\overline{OE}$	Q	MAX	8
t_{PLZ}				8

UNIT: ns

PRODUCTION DATA information is current as of publication date. Products conform to specifications per the terms of Texas Instruments standard warranty. Production processing does not necessarily include testing of all parameters. See www.ti.com/sc/logic for the most current data sheets.

8-BIT TO 9-BIT PARITY BUS TRANSCEIVER

Logic Diagram

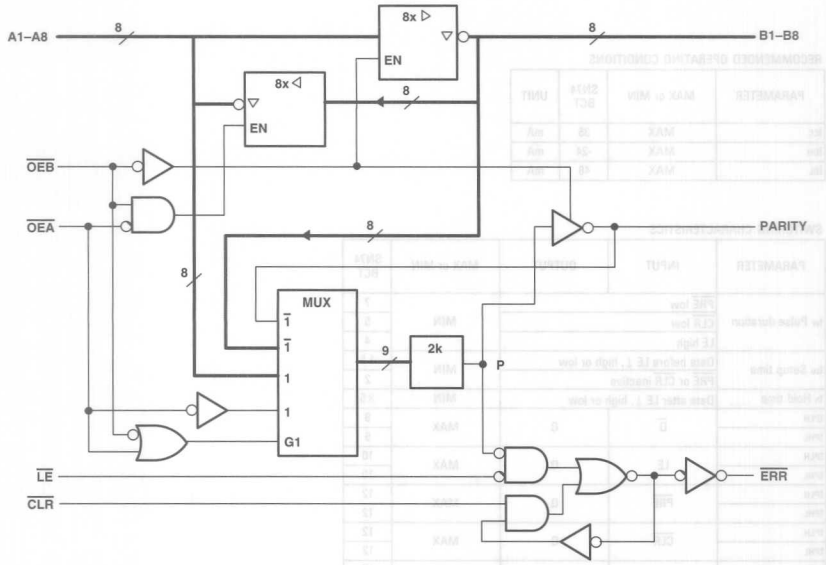

: OBSOLETED or NOT RECOMMENDED NEW DESIGNS

FUNCTION TABLE

INPUTS						OUTPUT AND I/O				OPERATION
$\overline{OEB}$	$\overline{OEA}$	$\overline{CLR}$	$\overline{LE}$	Ai Σ of Hs	Bi† Σ of Ls	A	B	PARITY	$\overline{ERR}$‡	
L	H	X	X	Odd Even	NA	NA	$\overline{A}$	H L	NA	$\overline{A}$ data to B bus and generate parity
H	L	X	L	NA	Odd Even	$\overline{B}$	NA	NA	H L	$\overline{B}$ data to A bus and check parity
H	L	H	H	NA	X	X	NA	NA	N-1	Store error flag
X	X	L	H	X	X	X	NA	NA	H	Clear error-flag register
H	H	H L X X	H H L L	X X L Odd H Even	X	Z	Z	Z	NC H L H	Isolation§
L	L	X	X	Odd Even	NA	NA	$\overline{A}$	L H	NA	$\overline{A}$ data to B bus and generate inverted parity

NA = not applicable, NC = no change, X = don't care
† Summation of high-level inputs includes PARITY along with Bi inputs.
‡ Output states shown assume $\overline{ERR}$ was previously high.
§ In this mode, $\overline{ERR}$, when enabled, shows inverted parity of the A bus.

RECOMMENDED OPERATING CONDITIONS

PARAMETER	MAX or MIN	ALS	SN74 BCT	UNIT
I_{CC}	MAX	100	80	mA
I_{OH}	MAX	-24	-24	mA
I_{OL}	MAX	48	48	mA

SWITCHING CHARACTERISTICS

PARAMETER	INPUT	OUTPUT	MAX or MIN	ALS	SN74 BCT
t_w Pulse duration	$\overline{LE}$ high		MIN	10	-
	$\overline{LE}$ low		MIN	10	10
	$\overline{CLR}$ low		MIN	10	10
t_{su} Setup time	Before $\overline{LE}$ ↓, Bi and PARITY		MIN	10	18
	Before LE ↓, $\overline{CLR}$ high		MIN	15	-
t_h Hold time	Bi and PARITY after $\overline{LE}$ ↓		MIN	3	8
t_{PLH}	A or B	B or A	MAX	8	8
t_{PHL}				8	8
t_{PLH}	A	PARITY	MAX	15	15
t_{PHL}				18	15
t_{PZH}	$\overline{OEA}$ or $\overline{OEB}$	A or B	MAX	17	17
t_{PZL}				17	19
t_{PHZ}	$\overline{OEA}$ or $\overline{OEB}$	A or B	MAX	15	15
t_{PLZ}				8	17
t_{PHL}	$\overline{LE}$	$\overline{ERR}$	MAX	12	9
t_{PLH}	$\overline{CLR}$	$\overline{ERR}$	MAX	12	15
t_{PLH}	$\overline{OEA}$	PARITY	MAX	17	15
t_{PHL}				19	16
t_{PLH}	Bi / PARITY	$\overline{ERR}$	MAX	20	20
t_{PHL}				20	15

UNIT: ns

29863

9-BIT BUS TRANSCEIVERS WITH 3-STATE OUTPUTS

- True Outputs

Logic Diagram

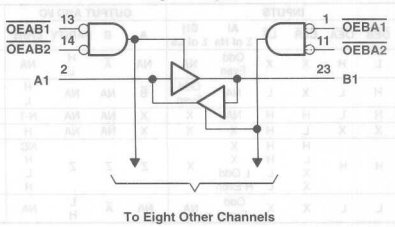

FUNCTION TABLE

INPUTS				OPERATION
OEAB1	OEAB2	OEBA1	OEBA2	
L	L	L	L	Latch A and B
L	L	H	X	A to B
L	L	X	H	
H	X	L	L	B to A
X	H	L	L	
H	X	H	X	Isolation
H	X	X	H	
X	H	X	H	
X	H	H	X	

RECOMMENDED OPERATING CONDITIONS

PARAMETER	MAX or MIN	ALS	SN74 BCT	UNIT
I_{CC}	MAX	65	45	mA
I_{OH}	MAX	-24	-24	mA
I_{OL}	MAX	48	48	mA

SWITCHING CHARACTERISTICS

PARAMETER	INPUT	OUTPUT	MAX or MIN	ALS	SN74 BCT
t_{PLH}	A or B	B or A	MAX	8	5
t_{PHL}				8	7.5
t_{PZH}	$\overline{OEAB}$ or $\overline{OEBA}$	A or B	MAX	15	8.4
t_{PZL}				15	12.6
t_{PHZ}	$\overline{OEAB}$ or $\overline{OEBA}$	A or B	MAX	17	8.8
t_{PLZ}				12	8.1

UNIT: ns

: OBSOLETED or NOT RECOMMENDED NEW DESIGNS

29864

9-BIT BUS TRANSCEIVERS WITH 3-STATE OUTPUTS

- Inverted Outputs

Logic Diagram

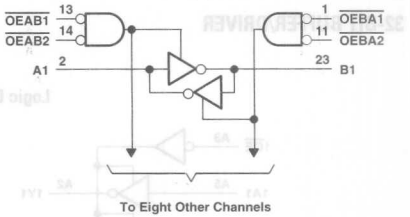

FUNCTION TABLE

INPUTS				OPERATION
OEAB1	OEAB2	OEBA1	OEBA2	
L	L	L	L	Latch A and B
L	L	H	X	$\overline{A}$ to B
L	L	X	H	
H	X	L	L	$\overline{B}$ to A
X	H	L	L	
H	X	H	X	Isolation
H	X	X	H	
X	H	X	H	
X	H	H	X	

RECOMMENDED OPERATING CONDITIONS

PARAMETER	MAX or MIN	SN74 BCT	UNIT
I_{CC}	MAX	45	mA
I_{OH}	MAX	-24	mA
I_{OL}	MAX	48	mA

SWITCHING CHARACTERISTICS

PARAMETER	INPUT	OUTPUT	MAX or MIN	SN74 BCT
t_{PLH}	A or B	B or A	MAX	6.1
t_{PHL}				4.8
t_{PZH}	$\overline{OEAB}$ or $\overline{OEBA}$	A or B	MAX	8.4
t_{PZL}				12.5
t_{PHZ}	$\overline{OEAB}$ or $\overline{OEBA}$	A or B	MAX	8.4
t_{PLZ}				8.2

UNIT: ns

PRODUCTION DATA information is current as of publication date. Products conform to specifications per the terms of Texas Instruments standard warranty. Production processing does not necessarily include testing of all parameters. See www.ti.com/sc/logic for the most current data sheets.

Logic Diagram

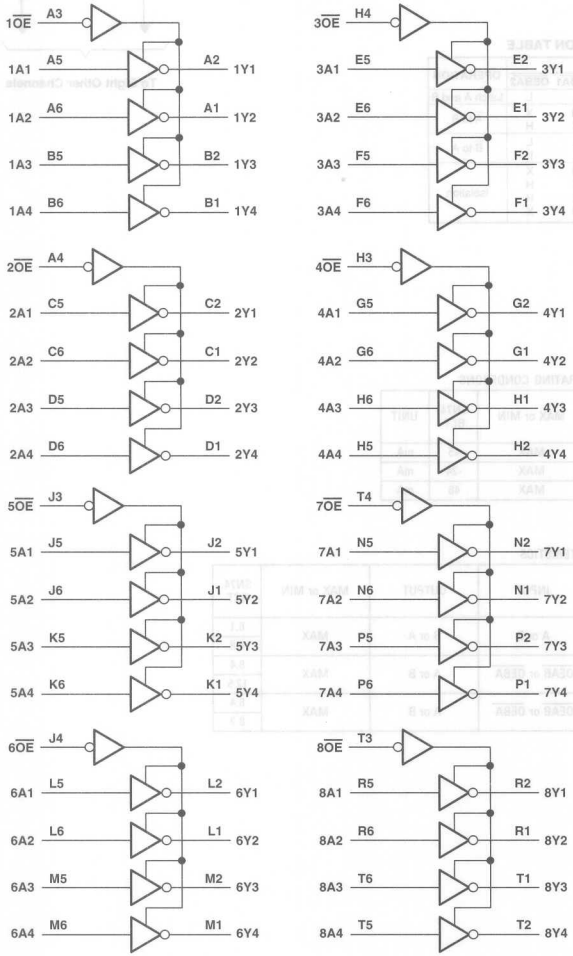

: OBSOLETED or NOT RECOMMENDED NEW DESIGNS

FUNCTION TABLE

(each 4bit buffer/drirer)

INPUTS		OUTPUT
$\overline{OE}$	A	Y
L	H	L
L	L	H
H	X	Z

RECOMMENDED OPERATING CONDITIONS

PARAMETER	MAX or MIN	LVT	UNIT
I_{CC}	MAX	10	mA
I_{OH}	MAX	-32	mA
I_{OL}	MAX	64	mA

SWITCHING CHARACTERISTICS

PARAMETER	INPUT	OUTPUT	MAX or MIN	LVT
t_{PLH}	A	Y	MAX	3.5
t_{PHL}			MAX	3.5
t_{PZH}	$\overline{OE}$	Y	MAX	4
t_{PZL}			MAX	4.4
t_{PHZ}	$\overline{OE}$	Y	MAX	4.5
t_{PLZ}			MAX	4.2

UNIT:ns

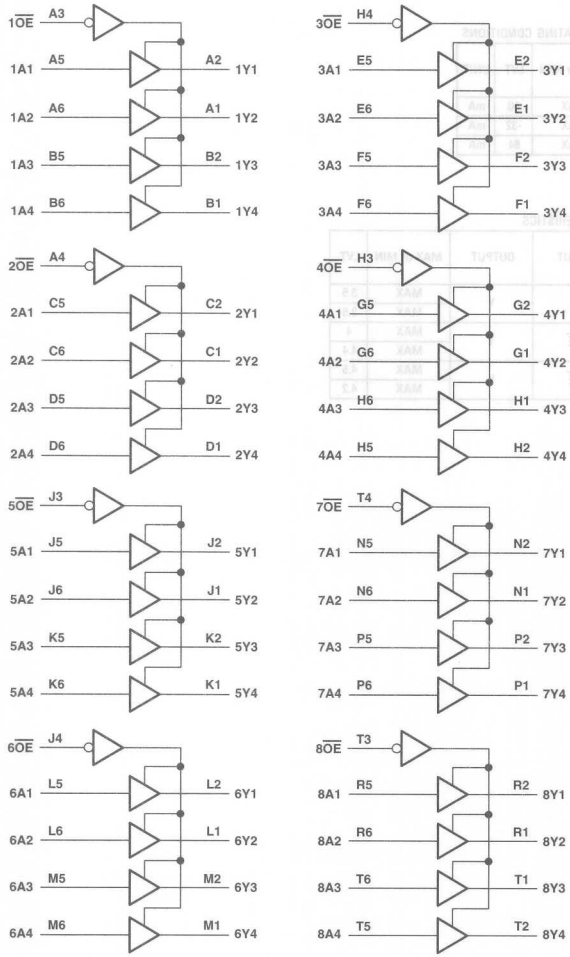

: OBSOLETED or NOT RECOMMENDED NEW DESIGNS

RECOMMENDED OPERATING CONDITIONS

PARAMETER	MAX or MIN	LVT 3V	LVTH 3V	ALVTH 3V	LVC 3V	LVCH 3V	ALVCH 3V	UNIT
I_{CC}	MAX	10	10	5	0.02	0.02	0.04	mA
I_{OH}	MAX	-32	-32	-32	-24	-24	-24	mA
I_{OL}	MAX	64	64	64	24	24	24	mA

SWITCHING CHARACTERISTICS

PARAMETER	INPUT	OUTPUT	MAX or MIN	LVT 3V	LVTH 3V	ALVTH 3V	LVC 3V	LVCH 3V	ALVCH 3V
t_{PLH}	A	Y	MAX	3.2	3.2	2.4	4.1	4.1	3
t_{PHL}				3.2	3.2	2.5	4.1	4.1	3
t_{PZH}	$\overline{OE}$	Y	MAX	4	4	3.8	4.6	4.6	4.4
t_{PZL}				4	4	2.9	4.6	4.6	4.4
t_{PHZ}	$\overline{OE}$	Y	MAX	4.5	4.5	4.2	5.8	5.8	4.1
t_{PLZ}				4.2	4.2	3.6	5.8	5.8	4.1

UNIT: ns

36-BIT BUS TRANSCEIVER WITH 3-STATE OUTPUTS

Logic Diagram

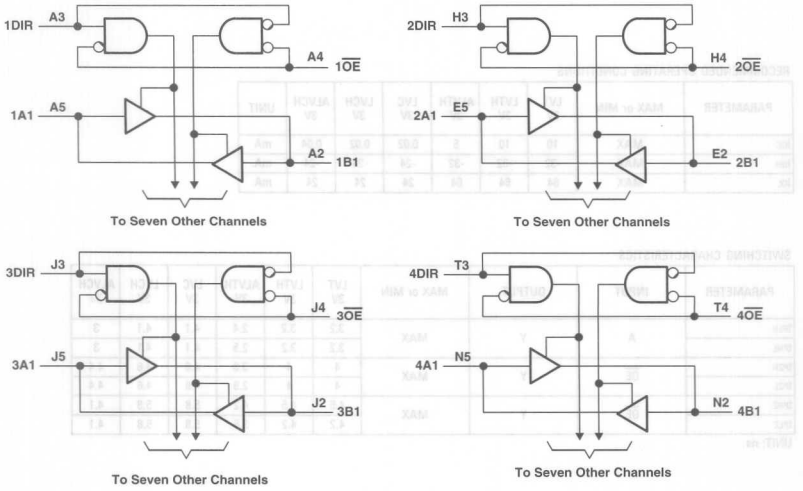

: OBSOLETED or NOT RECOMMENDED NEW DESIGNS

FUNCTION TABLE
(each 9-bit section)

INPUTS		OPERATION
$\overline{OE}$	DIR	
L	L	B data to A bus
L	H	A data to B bus
H	X	Isolation

RECOMMENDED OPERATING CONDITIONS

PARAMETER	MAX or MIN	ABTH	LVTH 3V	LVC 3V	LVCH 3V	ALVCH 3V	UNIT
I_{CC}	MAX	20	10	0.04	0.02	0.04	mA
I_{OH}	MAX	-32	-32	-24	-24	-24	mA
I_{OL}	MAX	64	64	24	24	24	mA

SWITCHING CHARACTERISTICS

PARAMETER	INPUT	OUTPUT	MAX or MIN	ABTH	LVTH 3V	LVC 3V	LVCH 3V	ALVCH 3V
t_{PLH}	A or B	B or A	MAX	5	3.3	4	4	3
t_{PHL}				5.2	3.3	4	4	3
t_{PZH}	$\overline{OE}$	B or A	MAX	7.3	4.5	5.5	5.5	4.4
t_{PZL}				8.1	4.6	5.5	5.5	4.4
t_{PHZ}	$\overline{OE}$	B or A	MAX	6.5	5.1	6.6	6.6	4.1
t_{PLZ}				6.9	5.1	6.6	6.6	4.1

UNIT: ns

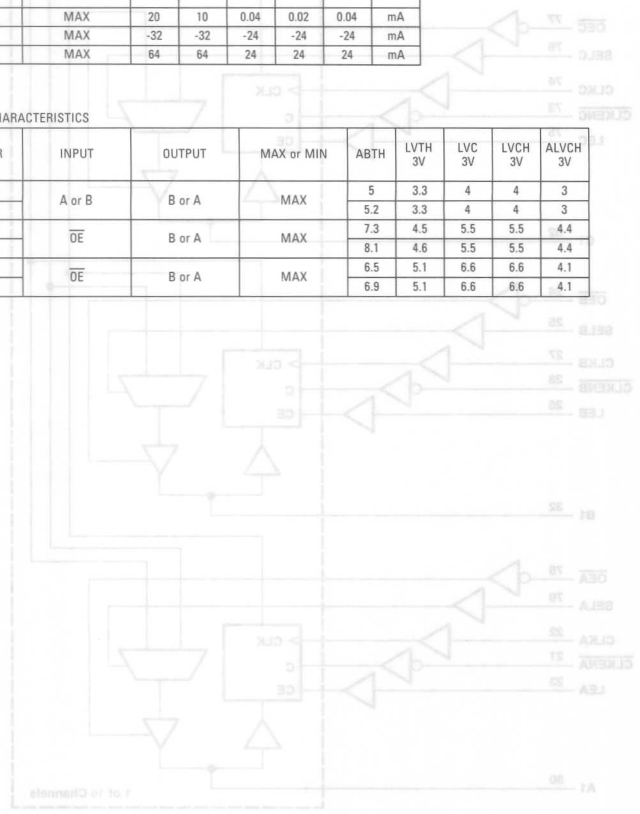

Logic Diagram

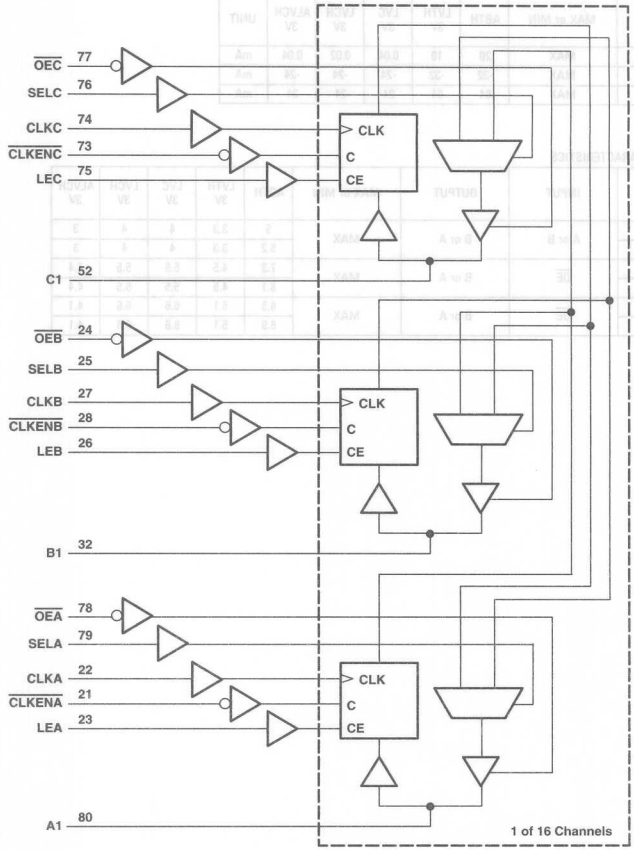

: OBSOLETED or NOT RECOMMENDED NEW DESIGNS

FUNCTION TABLE

STORAGE†

INPUTS				OUTPUT
$\overline{CLKENA}$	CLKA	LEA	A	
H	X	L	X	Q_0‡
L	↑	L	L	L
L	↑	L	H	H
X	H	L	X	Q_0‡
X	L	L	X	Q_0‡
X	X	H	L	L
X	X	H	H	H

† A-port register shown, B and C ports are similar but use $\overline{CLKENB}$, $\overline{CLKENC}$, CLKB, CLKC, LEB, and LEC.
‡ Output level before the indicated steady-state input conditions were established.

A-PORT OUTPUT

INPUTS		OUTPUT A
$\overline{OEA}$	SELA	
H	X	Z
L	H	Output of C register
L	L	Output of B register

B-PORT OUTPUT

INPUTS		OUTPUT B
$\overline{OEB}$	SELB	
H	X	Z
L	H	Output of A register
L	L	Output of C register

C-PORT OUTPUT

INPUTS		OUTPUT C
$\overline{OEC}$	SELC	
H	X	Z
L	H	Output of B register
L	L	Output of A register

RECOMMENDED OPERATING CONDITIONS

PARAMETER	MAX or MIN	ABTH	UNIT
I_{CC}	MAX	40	mA
I_{OH}	MAX	-32	mA
I_{OL}	MAX	64	mA

SWITCHING CHARACTERISTICS

PARAMETER	INPUT	OUTPUT	MAX or MIN	ABTH
f_{max}			MIN	150
t_w Pulse duration	LE high		MIN	3.3
	CLK high or low		MIN	3.3
t_{su} Setup time	A, B, or C before CLK ↑		MIN	2.4
	A or B before LE ↓		MIN	2.1
	$\overline{CLKEN}$ before CLK ↑		MIN	3.2
t_h Hold time	A, B, or C after CLK ↑		MIN	1.4
	A or B after LE ↓		MIN	2.1
	$\overline{CLKEN}$ after CLK ↑		MIN	1.1
t_{PLH}	A, B, or C	C, B, or A	MAX	6.1
t_{PHL}				6.6
t_{PLH}	SEL	A, B, or C	MAX	6.5
t_{PHL}				6.5
t_{PLH}	LE	A, B, or C	MAX	7.5
t_{PHL}				6.9
t_{PLH}	CLK	A, B, or C	MAX	7.5
t_{PHL}				6.7
t_{PZH}	$\overline{OE}$	A, B, or C	MAX	6.4
t_{PZL}				6.8
t_{PHZ}	$\overline{OE}$	A, B, or C	MAX	6
t_{PLZ}				6.1

UNIT fmax : MHz other : ns

Logic Diagram

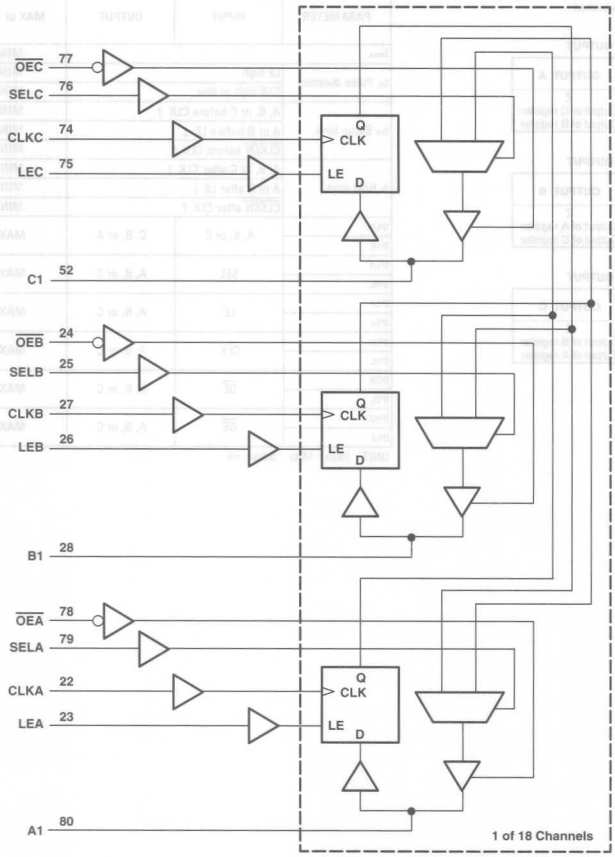

: OBSOLETED or NOT RECOMMENDED NEW DESIGNS

FUNCTION TABLE
STORAGE†

INPUTS			OUTPUT
CLKA	LEA	A	
↑	L	L	L
↑	L	H	H
H	L	X	Q_0‡
L	L	X	Q_0‡
X	H	L	L
X	H	H	H

† A-port register shown, B and C ports are similar but use CLKB, CLKC, LEB, and LEC.
‡ Outpu level befor the indicated steady-state input conditions were established.

A-PORT OUTPUT

INPUTS		OUTPUT A
$\overline{OEA}$	SELA	
H	X	Z
L	H	Output of C register
L	L	Output of B register

B-PORT OUTPUT

INPUTS		OUTPUT B
$\overline{OEB}$	SELB	
H	X	Z
L	H	Output of A register
L	L	Output of C register

C-PORT OUTPUT

INPUTS		OUTPUT C
$\overline{OEC}$	SELC	
H	X	Z
L	H	Output of B register
L	L	Output of A register

RECOMMENDED OPERATING CONDITIONS

PARAMETER	MAX or MIN	ABTH	UNIT
I_{CC}	MAX	45	mA
I_{OH}	MAX	-32	mA
I_{OL}	MAX	64	mA

SWITCHING CHARACTERISTICS

PARAMETER	INPUT	OUTPUT	MAX or MIN	ABTH
f_{max}			MIN	150
t_w Pulse duration	LE high		MIN	3.3
	CLK high or low		MIN	3.3
t_{su} Setup time	A, B, or C before CLK ↑		MIN	2.4
	A, B, or C before LE ↓		MIN	2.1
t_h Hold time	A, B, or C after CLK ↑		MIN	1.4
	A, B, or C after LE ↓		MIN	2.1
t_{PLH}	A, B, or C	C, B, or A	MAX	6.1
t_{PHL}				6.6
t_{PLH}	SEL	A, B, or C	MAX	6.5
t_{PHL}				6.5
t_{PLH}	LE	A, B, or C	MAX	7.5
t_{PHL}				6.9
t_{PLH}	CLK	A, B, or C	MAX	7.4
t_{PHL}				6.7
t_{PZH}	$\overline{OE}$	A, B, or C	MAX	6.8
t_{PZL}				7.1
t_{PHZ}	$\overline{OE}$	A, B, or C	MAX	6.2
t_{PLZ}				6

UNIT fmax : MHz other : ns

PRODUCTION DATA information is current as of publication date. Products conform to specifications per the terms of Texas Instruments standard warranty. Production processing does not necessarily include testing of all parameters. See www.ti.com/sc/logic for the most current data sheets.

Logic Diagram

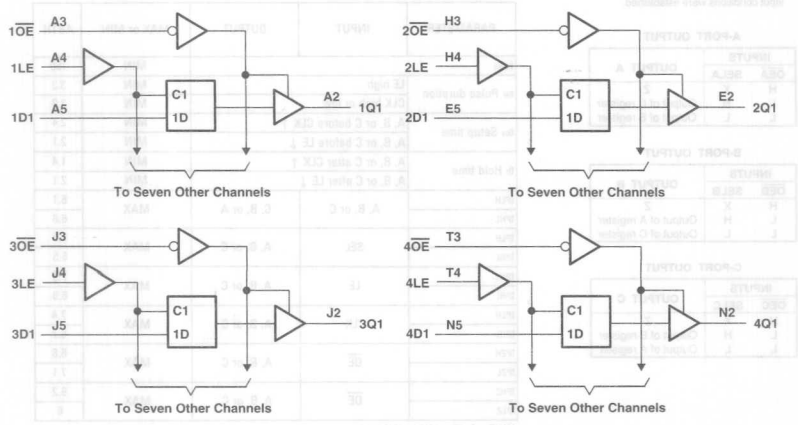

: OBSOLETED or NOT RECOMMENDED NEW DESIGNS

FUNCTION TABLE

INPUTS			OUTPUT
$\overline{OE}$	LE	D	Q
L	H	H	H
L	H	L	L
L	L	X	Q_0
H	X	X	Z

RECOMMENDED OPERATING CONDITIONS

PARAMETER	MAX or MIN	LVTH 3V	ALVTH 3V	LVCH 3V	UNIT
I_{CC}	MAX	10	5	0.02	mA
I_{OH}	MAX	-32	-32	-24	mA
I_{OL}	MAX	64	64	24	mA

SWITCHING CHARACTERISTICS

PARAMETER	INPUT	OUTPUT	MAX or MIN	LVTH 3V	ALVTH 3V	LVCH 3V
t_w Pulse duration, LE high or low			MIN	3	1.5	3.3
t_{su} Setup time	Data before LE ↓, data high		MIN	1	1.4	1.7
	Data before LE ↓, data low		MIN	1	0.9	1.7
t_h Hold time	Data after LE ↓, data high		MIN	1	0.9	1.2
	Data after LE ↓, data low		MIN	1	1.4	1.2
t_{PLH}	D	Q	MAX	3.8	3.1	4.2
t_{PHL}				3.6	3.3	4.2
t_{PLH}	LE	Q	MAX	4.3	3.3	4.6
t_{PHL}				4	3.5	4.6
t_{PZH}	$\overline{OE}$	Q	MAX	4.3	4	4.7
t_{PZL}				4.3	3.4	4.7
t_{PHZ}	$\overline{OE}$	Q	MAX	5	4.9	5.9
t_{PLZ}				4.7	4.5	5.9

UNIT: ns

32374

32-BIT EDGE-TRIGGERED D-TYPE FLIP-FLOP WITH 3-STATE OUTPUTS

Logic Diagram

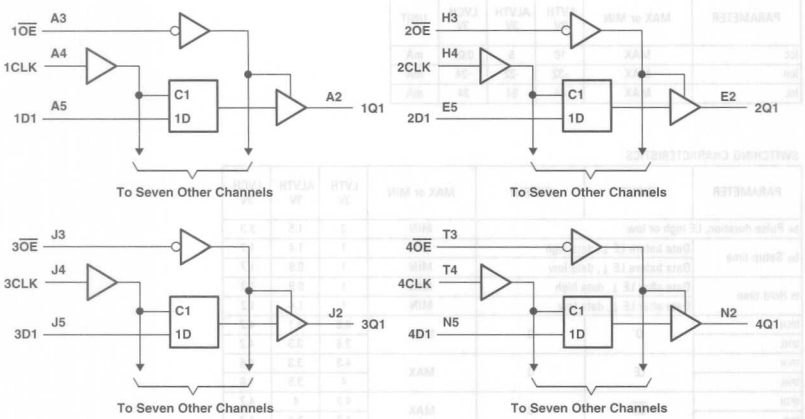

: OBSOLETED or NOT RECOMMENDED NEW DESIGNS

FUNCTION TABLE
(each flip-flop)

INPUTS			OUTPUT
$\overline{OE}$	CLK	D	Q
L	↑	H	H
L	↑	L	L
L	H or L	X	Q_0
H	X	X	Z

RECOMMENDED OPERATING CONDITIONS

PARAMETER	MAX or MIN	LVTH 3V	ALVTH 3V	LVCH 3V	ALVCH 3V	UNIT
I_{CC}	MAX	10	5	0.02	0.04	mA
I_{OH}	MAX	-32	-32	-24	-24	mA
I_{OL}	MAX	64	64	24	24	mA

SWITCHING CHARACTERISTICS

PARAMETER	INPUT	OUTPUT	MAX or MIN	LVTH 3V	ALVTH 3V	LVCH 3V	ALVCH 3V
f_{max}				160	250	150	150
t_w Pulse duration, CLK high or low			MIN	3	1.5	3.3	3.3
t_{su} Setup time	Data before CLK ↑, data high		MIN	1.8	1	1.9	1.9
	Data before CLK ↑, data low		MIN	1.8	1.5	1.9	1.9
t_h Hold time	Data after CLK ↑, data high		MIN	0.8	0.5	1.1	0.5
	Data after CLK ↑, data low		MIN	0.8	1	1.1	0.5
t_{PLH}	CLK	Q	MAX	4.5	3.2	4.5	4.2
t_{PHL}				4	3.2	4.5	4.2
t_{PZH}	$\overline{OE}$	Q	MAX	4.5	3.8	4.6	4.8
t_{PZL}				4.4	3.3	4.6	4.8
t_{PHZ}	$\overline{OE}$	Q	MAX	5	4.6	5.5	4.3
t_{PLZ}				4.6	4.2	5.5	4.3

UNIT fmax : MHz other : ns

Logic Diagram

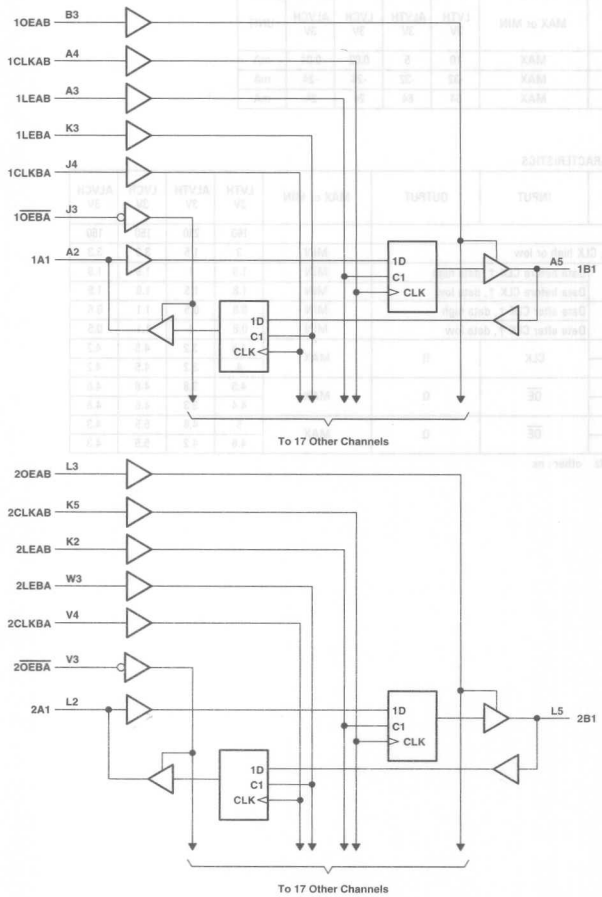

: OBSOLETED or NOT RECOMMENDED NEW DESIGNS

FUNCTION TABLE†

INPUTS			OUTPUT
OEAB	LEAB	CLKAB	A	B
L	X	↑	X	Z

§ Output level before the indicated steady-state input conditions were established, provided that CLKAB was high before LEAB went low

RECOMMENDED OPERATING CONDITIONS

PARAMETER	MAX or MIN	ABTH	ALVCH 3V	UNIT
I_{CC}	MAX	90	0.02	mA
I_{OH}	MAX	-32	-24	mA
I_{OL}	MAX	64	24	mA

SWITCHING CHARACTERISTICS

PARAMETER	INPUT	OUTPUT	MAX or MIN	ABTH	ALVCH 3V
f_{max}			MIN	150	150
t_w Pulse duration	LEAB or LEBA high		MIN	3.3	3.3
	CLKAB or CLKBA high or low		MIN	3.3	3.3
t_{su} Setup time	A before CLKAB ↑		MIN	3.5	1.7
	B before CLKBA ↑		MIN	3.5	1.7
	A before LEAB ↓or LEBA ↓CLK high		MIN	1.6	1.5
	A before LEAB ↓or LEBA ↓CLK low		MIN	1.6	1
t_h Hold time	A after CLKAB ↑or B after CLKBA ↑		MIN	0	0.7
	A after LEAB ↓or B after LEBA ↓		MIN	1.6	1.4
t_{PLH}	A or B	B or A	MAX	4.8	3.9
t_{PHL}				5.4	3.9
t_{PZH}	LEAB or LEBA	B or A	MAX	5.3	4.6
t_{PZL}				5.5	4.6
t_{PHZ}	CLKAB or CLKBA	B or A	MAX	5.3	4.9
t_{PLZ}				5.4	4.9
t_{PZH}	OEAB	B	MAX	5.6	4.6
t_{PZL}				6	4.6
t_{PHZ}	OEAB	B	MAX	5.9	5
t_{PLZ}				5.6	5
t_{PZH}	$\overline{OEBA}$	A	MAX	5.6	5
t_{PZL}				6	5
t_{PHZ}	$\overline{OEBA}$	A	MAX	5.9	4.2
t_{PLZ}				5.6	4.2

UNIT fmax : MHz other : ns

Logic Diagram

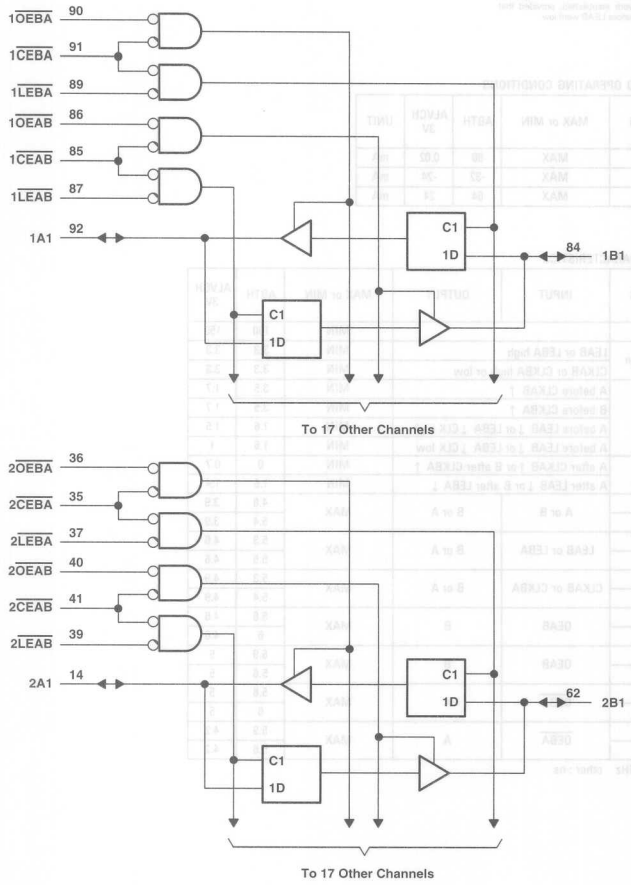

: OBSOLETED or NOT RECOMMENDED NEW DESIGNS

FUNCTION TABLE

INPUTS				OUTPUT
$\overline{CEAB}$	LEAB	$\overline{OEAB}$	A	Y
H	X	X	X	Z
X	X	H	X	Z
L	H	L	X	B_0‡
L	L	L	L	L
L	L	L	H	H

† A-to-B data flow is shown: B-to-A flow conditions is the same that it uses $\overline{CEBA}$, $\overline{LEBA}$, and $\overline{OEBA}$.
‡ Outoput level before the indicated steady-state input conditions were established

RECOMMENDED OPERATING CONDITIONS

PARAMETER	MAX or MIN	ABTH	UNIT
I_{CC}	MAX	20	mA
I_{OH}	MAX	-32	mA
I_{OL}	MAX	64	mA

SWITCHING CHARACTERISTICS

PARAMETER	INPUT	OUTPUT	MAX or MIN	ABTH
t_w Pulse duration, $\overline{LEAB}$ or $\overline{LEBA}$ low			MIN	3.3
t_{su} Setup time	Data before $\overline{LEAB}$ ↑ or $\overline{LEBA}$ ↑		MIN	2.1
	Data before $\overline{CEAB}$ ↑ or $\overline{CEBA}$ ↑		MIN	1.7
t_h Hold time	Data after $\overline{LEAB}$ ↑ or $\overline{LEBA}$ ↑		MIN	0.6
	Data after $\overline{CEAB}$ ↑ or $\overline{CEBA}$ ↑		MIN	0.9
t_{PLH}	A or B	B or A	MAX	5.9
t_{PHL}				5.7
t_{PLH}	$\overline{LE}$	A or B	MAX	7.5
t_{PHL}				6.6
t_{PZH}	$\overline{CE}$	A or B	MAX	8
t_{PZL}				8.8
t_{PHZ}	$\overline{CE}$	A or B	MAX	7.1
t_{PLZ}				7.5
t_{PZH}	$\overline{OE}$	A or B	MAX	7.3
t_{PZL}				8.1
t_{PHZ}	$\overline{OE}$	A or B	MAX	6.5
t_{PLZ}				6.9

UNIT: ns

40103

Logic Diagram

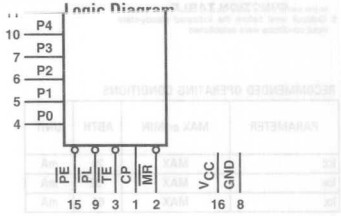

FUNCTION TABLE

CONTROL INPUTS					
$\overline{MR}$	$\overline{PL}$	$\overline{PE}$	$\overline{TE}$	PRESET MODE	ACTION
L	X	X	L	Synchronous	Inhibit Counter
X	H	X	L		Cownt Down
X	X	L	L		Preset On Next Positive Clock Transition
H	L	L	L	Asynchronously	Preset Asychronously
H	L	H	L		Clear to Maximum Count

RECOMMENDED OPERATING CONDITIONS

PARAMETER	MAX or MIN	CD74 HC	CD74 HCT	UNIT
I_{CC}	MAX	0.16	0.16	mA
I_{OH}	MAX	-4	-4	mA
I_{OL}	MAX	4	4	mA

SWITCHING CHARACTERISTICS

PARAMETER	INPUT	OUTPUT	MAX or MIN	CD74 HC	CD74 HCT
t_w	CP		MIN	50	53
	$\overline{PL}$			38	63
	$\overline{MR}$			38	53
t_{su}	P to CP		MIN	30	36
	$\overline{PE}$ to CP			22	30
	$\overline{TE}$ to CP			45	60
t_h	P to CP		MIN	5	5
	$\overline{TE}$ to $\overline{CP}$			0	0
	$\overline{PE}$ to $\overline{CP}$			2	2
t_{PLH}	CP	$\overline{TC}$ (Async Preset)	MAX	90	90
t_{PHL}				90	90
t_{PLH}	CP	$\overline{TC}$ (Sync Preset)	MAX	90	95
t_{PHL}				90	95
t_{PLH}	$\overline{TE}$	$\overline{TC}$	MAX	60	75
t_{PHL}				60	75
t_{PLH}	$\overline{PL}$	$\overline{TC}$	MAX	83	102
t_{PHL}				83	102
t_{PLH}	$\overline{MR}$	$\overline{TC}$	MAX	83	83
t_{PHL}				83	83

UNIT:ns

: OBSOLETED or NOT RECOMMENDED NEW DESIGNS

Logic Diagram

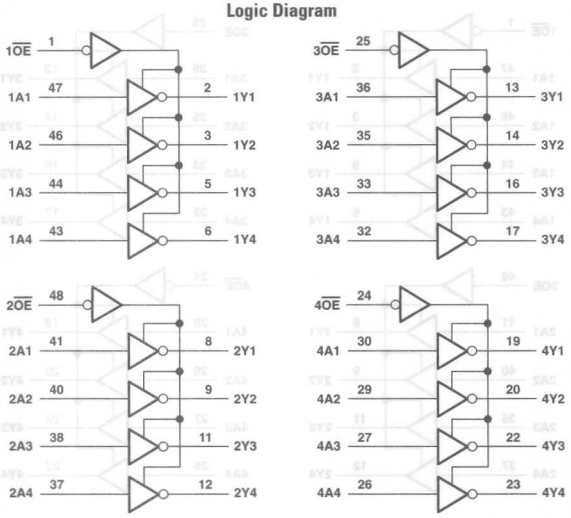

FUNCTION TABLE

INPUTS		OUTPUT
$\overline{OE}$	A	Y
L	H	L
L	L	H
H	X	Z

RECOMMENDED OPERATING CONDITIONS

PARAMETER	MAX or MIN	LVT 3V	LVTH 3V	UNIT
I_{CC}	MAX	5	5	mA
I_{OH}	MAX	-12	-12	mA
I_{OL}	MAX	12	12	mA

SWITCHING CHARACTERISTICS

PARAMETER	INPUT	OUTPUT	MAX or MIN	LVT 3V	LVTH 3V
t_{PLH}	A	Y	MAX	4	4
t_{PHL}				4	4
t_{PZH}	$\overline{OE}$	Y	MAX	4.8	4.8
t_{PZL}				4.7	4.7
t_{PHZ}	$\overline{OE}$	Y	MAX	4.7	4.7
t_{PLZ}				4.5	4.5

UNIT: ns

PRODUCTION DATA information is current as of publication date. Products conform to specifications per the terms of Texas Instruments standard warranty. Production processing does not necessarily include testing of all parameters. See www.ti.com/sc/logic for the most current data sheets.

3.3-V ABT 16-BIT BUFFERS/DRIVERS WITH 3-STATE OUTPUTS

Logic Diagram

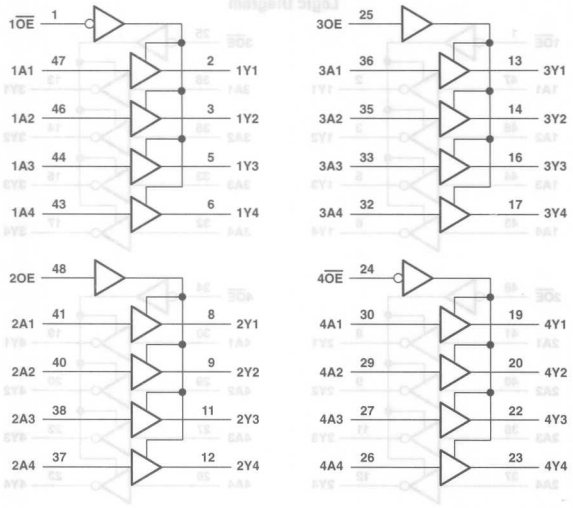

FUNCTION TABLE

INPUTS		OUTPUT
1OE, 4OE	1A, 4A	1Y, 4Y
L	H	H
L	L	L
H	X	Z

INPUTS		OUTPUT
2OE, 3OE	2A, 3A	2Y, 3Y
H	H	H
H	L	L
L	X	Z

RECOMMENDED OPERATING CONDITIONS

PARAMETER	MAX or MIN	LVTH 3V	UNIT
I_{CC}	MAX	5	mA
I_{OH}	MAX	-12	mA
I_{OL}	MAX	12	mA

SWITCHING CHARACTERISTICS

PARAMETER	INPUT	OUTPUT	MAX or MIN	LVTH 3V
t_{PLH}	A	Y	MAX	4.1
t_{PHL}				4.1
t_{PZH}	$\overline{OE}$ or OE	Y	MAX	4.9
t_{PZL}				4.8
t_{PHZ}	$\overline{OE}$ or OE	Y	MAX	5.3
t_{PLZ}				4.9

UNIT: ns

: OBSOLETED or NOT RECOMMENDED NEW DESIGNS

16-BIT BUFFERS/DRIVERS WITH 3-STATE OUTPUTS

- SN74ABT162244: Output Ports Have Equivalent 25-Ω Series Resistors
- SN74LVT162244A, LVTH162244: Output Ports Have Equivalent 22-Ω Series Resistors
- SN74ALVTH162244: Output Ports Have Equivalent 30-Ω Series Resistors
- SN74LVC162244A: Output Ports Have Equivalent 26-Ω Series Resistors
- SN74LVCH162244A: Output Ports Have Equivalent 26-Ω Series Resistors
- SN74ALVCH162244: Output Ports Have Equivalent 26-Ω Series Resistors

Logic Diagram

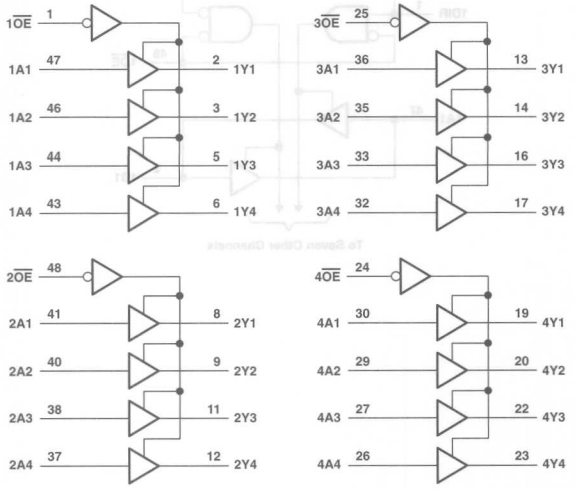

FUNCTION TABLE
(each 4-bit buffer)

INPUTS		OUTPUT
$\overline{OE}$	A	Y
L	H	H
L	L	L
H	X	Z

RECOMMENDED OPERATING CONDITIONS

PARAMETER	MAX or MIN	ABT	LVT 3V	LVTH 3V	ALVTH 3V	LVC 3V	LVCH 3V	ALVCH 3V	UNIT
I_{CC}	MAX	30	5	5	5	0.02	0.02	0.04	mA
I_{OH}	MAX	-12	-12	-12	-12	-12	-12	-12	mA
I_{OL}	MAX	12	12	12	12	12	12	12	mA

SWITCHING CHARACTERISTICS

PARAMETER	INPUT	OUTPUT	MAX or MIN	ABT	LVT 3V	LVTH 3V	ALVTH 3V	LVC 3V	LVCH 3V	ALVCH 3V
t_{PLH}	A	Y	MAX	3.9	4	4	3.3	4.4	4.4	4.2
t_{PHL}				4.8	3.6	3.6	3.3	4.4	4.4	4.2
t_{PZH}	$\overline{OE}$	Y	MAX	5.4	5.1	5.1	4.9	5.5	5.5	5.6
t_{PZL}				5.1	4.5	4.5	3.3	5.5	5.5	5.6
t_{PHZ}	$\overline{OE}$	Y	MAX	4.6	5	5	4.9	6.3	6.3	5.5
t_{PLZ}				4.5	5	5	4.3	6.3	6.3	5.5

UNIT: ns

PRODUCTION DATA information is current as of publication date. Products conform to specifications per the terms of Texas Instruments standard warranty. Production processing does not necessarily include testing of all parameters. See www.ti.com/sc/logic for the most current data sheets.

- SN74LVCR162245: All Outputs Have Equivalent 26-Ω Series Resistors

Logic Diagram

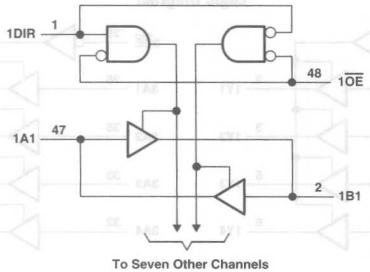

: OBSOLETED or NOT RECOMMENDED NEW DESIGNS

H X Isolation

RECOMMENDED OPERATING CONDITIONS

PARAMETER	MAX or MIN	ABT	ABTH	LVT 3V	LVTH 3V	ALVTH 3V	LVCR 3V	UNIT
I_{CC}	MAX	32	32	5	5	5	0.02	mA
I_{OH} (A port)	MAX	-12	-12	-12	-12	-12	-12	mA
I_{OH} (B port)	MAX	-32	-32	-32	-32	-32	-12	mA
I_{OL} (A port)	MAX	12	12	12	12	12	12	mA
I_{OL} (B port)	MAX	64	64	64	64	64	12	mA

SWITCHING CHARACTERISTICS

PARAMETER	INPUT	OUTPUT	MAX or MIN	ABT	ABTH	LVT 3V	LVTH 3V	ALVTH 3V	LVC 3V
t_{PLH}	A	B	MAX	3.9	3.9	3.3	3.3	3.1	7.5
t_{PHL}				4.2	4.2	3.3	3.3	3	7.5
t_{PLH}	B	A	MAX	4.6	4.6	4	4	3.7	7.5
t_{PHL}				5.1	5.1	3.4	3.4	3.4	7.5
t_{PZH}	$\overline{OE}$	B	MAX	6.3	6.3	4.6	4.6	3.8	9
t_{PZL}				6.4	6.4	4.6	4.6	3.4	9
t_{PHZ}	$\overline{OE}$	B	MAX	6.3	6.3	5.2	5.2	4.7	7.5
t_{PLZ}				5.2	5.2	5.1	5.1	4.8	7.5
t_{PZH}	$\overline{OE}$	A	MAX	7.1	7.1	5.3	5.3	4.7	9
t_{PZL}				7	7	5.1	5.1	3.9	9
t_{PHZ}	$\overline{OE}$	A	MAX	6.6	6.6	5.6	5.6	5	7.5
t_{PLZ}				5.7	5.7	5.5	5.5	4.9	7.5

UNIT: ns

162260

12-BIT TO 24-BIT MULTIPLEXED D-TYPE LATCH WITH 3-STATE OUTPUTS

- SN74ABTH162260: B-Port Outputs Have Equivalent 25-Ω Series Resistors
- SN74ALVCH162260: B-Port Outputs Have Equivalent 26-Ω Series Resistors

Logic Diagram

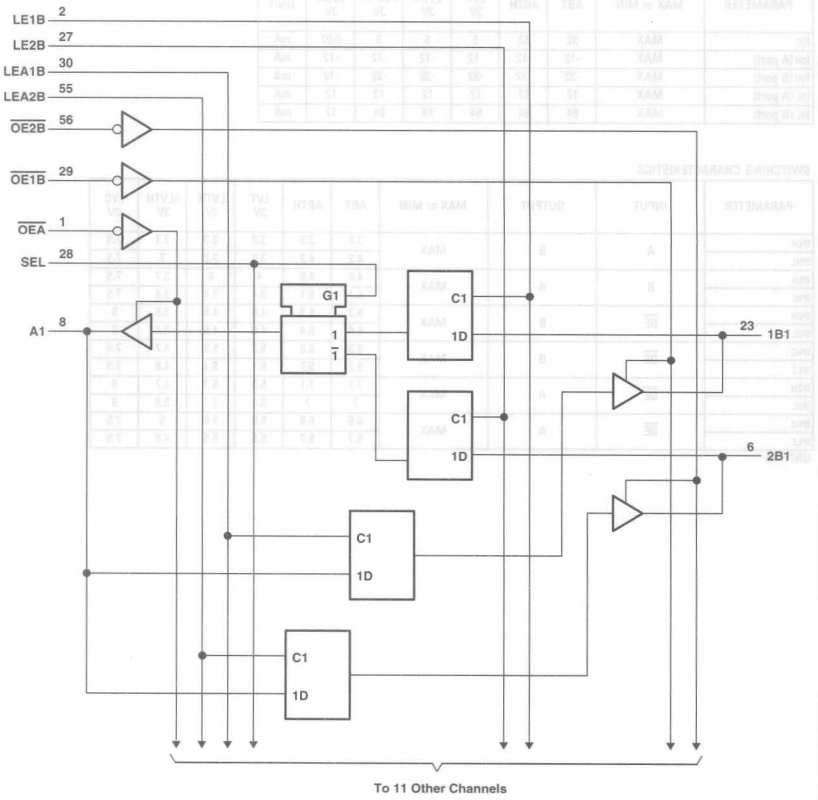

: OBSOLETED or NOT RECOMMENDED NEW DESIGNS

FUNCTION TABLE

B TO A ($\overline{OEB}$ = H)

INPUTS						OUTPUT
1B	2B	SEL	LE1B	LE2B	$\overline{OEA}$	A
H	X	H	H	X	L	H
L	X	H	H	X	L	L
X	X	H	L	X	L	A_0
X	H	L	X	H	L	H
X	L	L	X	H	L	L
X	X	L	X	L	L	A_0
X	X	X	X	X	H	Z

A TO B ($\overline{OEA}$ = H)

INPUTS					OUTPUTS	
A	LEA1B	LEA2B	OE1B	OE2B	1B	2B
H	H	H	L	L	H	H
L	H	H	L	L	L	L
H	H	L	L	L	H	$2B_0$
L	H	L	L	L	L	$2B_0$
H	L	H	L	L	$1B_0$	H
L	L	H	L	L	$1B_0$	L
X	L	L	L	L	$1B_0$	$2B_0$
X	X	X	H	H	Z	Z
X	X	X	L	H	Active	Z
X	X	X	H	L	Z	Active
X	X	X	L	L	Active	Active

RECOMMENDED OPERATING CONDITIONS

PARAMETER	MAX or MIN	ABTH	ALVCH 3V	UNIT
I_{CC}	MAX	63	0.04	mA
I_{OH} (A port)	MAX	-32	-24	mA
I_{OH} (B port)	MAX	-32	-12	mA
I_{OL} (A port)	MAX	64	24	mA
I_{OL} (B port)	MAX	12	12	mA

SWITCHING CHARACTERISTICS

PARAMETER	INPUT	OUTPUT	MAX or MIN	ABTH	ALVCH 3V
f_{max}				-	150
t_w Pulse duration, LE1B, LE2B, LEA1B, or LEA2B high			MIN	3.3	3.3
t_{su} Setup time, data before LE1B, LE2B, LEA1B, or LEA2B ↓			MIN	1.5	1.1
t_h Hold time, data after LE1B, LE2B, LEA1B, or LEA2B ↓			MIN	1	1.5
t_{PLH}	A	B	MAX	6.1	4.9
t_{PHL}				7.1	4.9
t_{PLH}	B	A	MAX	6	4.3
t_{PHL}				6.2	4.3
t_{PLH}	LE	A	MAX	6.3	4.4
t_{PHL}				5.8	4.4
t_{PLH}	LE	B	MAX	6.1	5
t_{PHL}				7.1	5
t_{PLH}	SEL (1B)	A	MAX	5.6	5.6
	SEL (2B)			6.3	5.6
t_{PHL}	SEL (1B)		MAX	5	5.6
	SEL (2B)			6.2	5.6
t_{PZH}	$\overline{OE}$	A	MAX	6.3	5.4
t_{PZL}				6.5	5.4
t_{PZH}	$\overline{OE}$	B	MAX	6.3	6
t_{PZL}				8.2	6
t_{PHZ}	$\overline{OE}$	A	MAX	6.7	4.6
t_{PLZ}				5.2	4.6
t_{PHZ}	$\overline{OE}$	B	MAX	7.5	5.1
t_{PLZ}				6.2	5.1

UNIT fmax : MHz other : ns

PRODUCTION DATA information is current as of publication date. Products conform to specifications per the terms of Texas Instruments standard warranty. Production processing does not necessarily include testing of all parameters. See www.ti.com/sc/logic for the most current data sheets.

Logic Diagram

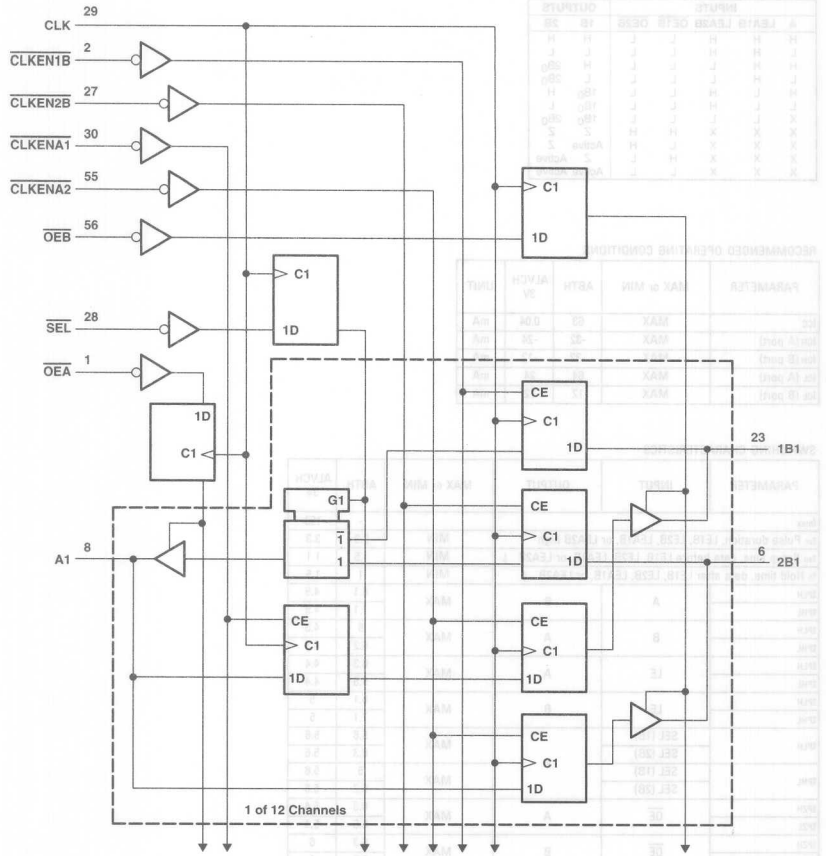

: OBSOLETED or NOT RECOMMENDED NEW DESIGNS

FUNCTION TABLE

OUTPUT ENABLE

INPUTS			OUTPUTS	
CLK	$\overline{OEA}$	$\overline{OEB}$	A	1B, 2B
↑	H	H	Z	Z
↑	H	L	Z	Active
↑	L	H	Active	Z
↑	L	L	Active	Active

A-TO-B STORAGE ($\overline{OEB}$ = L)

INPUTS				OUTPUTS	
$\overline{CLKENA1}$	$\overline{CLKENA2}$	CLK	A	1B	2B
H	H	X	X	$1B_0$‡	$2B_0$‡
L	X	↑	L	L†	X
L	X	↑	H	H†	X
X	L	↑	L	X	L
X	L	↑	H	X	H

† Two CLK edges are needed to propagate data.
‡ Output level before the indicated steady-state input conditions were established

B-TO-A STORAGE ($\overline{OEA}$ = L)

INPUTS						OUTPUT
$\overline{CLKEN1B}$	$\overline{CLKEN2B}$	CLK	$\overline{SEL}$	1B	2B	A
H	X	X	H	X	X	A_0‡
X	H	X	L	X	X	A_0‡
L	X	↑	H	H	X	L
L	X	↑	H	L	X	H
X	L	↑	L	X	L	L
X	L	↑	L	X	H	H

‡ Output level before the indicated steady-state input conditions were established

RECOMMENDED OPERATING CONDITIONS

PARAMETER	MAX or MIN	ALVCH 3V	UNIT
I_{CC}	MAX	0.04	mA
I_{OH} (A port)	MAX	-24	mA
I_{OH} (B port)	MAX	-12	mA
I_{OL} (A port)	MAX	24	mA
I_{OL} (B port)	MAX	12	mA

SWITCHING CHARACTERISTICS

PARAMETER	INPUT	OUTPUT	MAX or MIN	ALVCH 3V
f_{max}			MIN	150
t_w Pulse duration, CLK high or low			MIN	3.3
t_{su} Setup time	A data before CLK ↑		MIN	3.4
	B data before CLK ↑		MIN	1
	$\overline{SEL}$ before CLK ↑		MIN	1.3
	$\overline{CLKENA1}$ or $\overline{CLKENA2}$ before CLK ↑		MIN	2.8
	$\overline{CLKENB1}$ or $\overline{CLKENB2}$ before CLK ↑		MIN	2.5
	$\overline{OE}$ before CLK ↑		MIN	3.2
t_h Hold time	A data after CLK ↑		MIN	0.2
	B data after CLK ↑		MIN	1.3
	$\overline{SEL}$ after CLK ↑		MIN	1
	$\overline{CLKENA1}$ or $\overline{CLKENA2}$ after CLK ↑		MIN	0.4
	$\overline{CLKENB1}$ or $\overline{CLKENB2}$ after CLK ↑		MIN	0.5
	$\overline{OE}$ after CLK ↑		MIN	0.2
t_{pd}	CLK	B	MAX	5.4
		A (1B)		4.8
		A (2B)		4.8
		A (SEL)		5.8
t_{en}	CLK	B	MAX	6.1
		A		5.1
t_{dis}	CLK	B	MAX	5.9
		A		5

UNIT fmax : MHz other : ns

162280

16-BIT TO 32-BIT REGISTERED BUS EXCHANGER WITH BYTE MASKS AND 3-STATE OUTPUTS

- SN74ALVCHG162280: A-Port Outputs Have Equivalent 50-Ω Series Resistors
- B-Port Outputs Have Equivalent 20-Ω Series Resistors

Logic Diagram

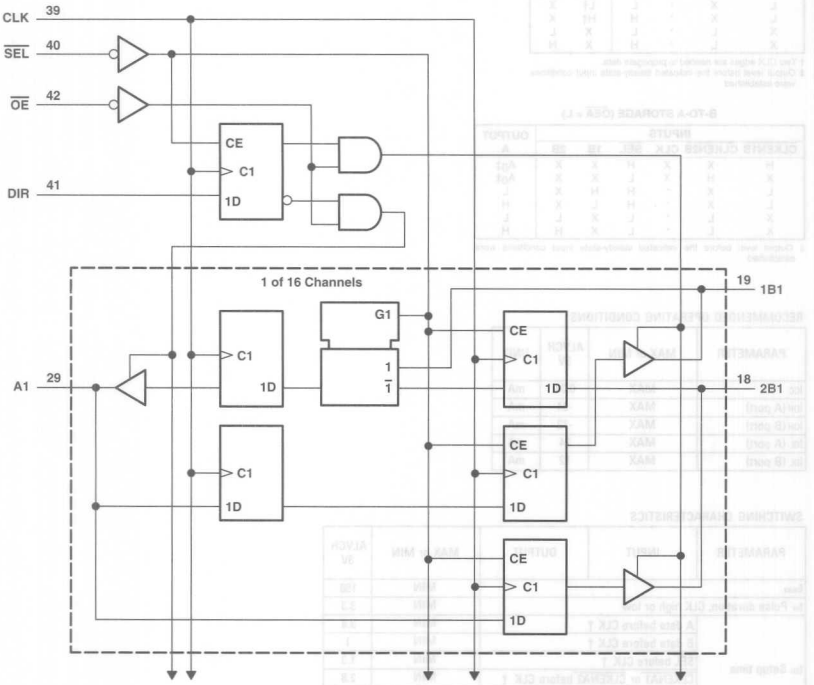

: OBSOLETED or NOT RECOMMENDED NEW DESIGNS

FUNCTION TABLE

A-TO-B STORAGE ($\overline{OE}$ = L, DIR = H)

INPUTS			OUTPUTS	
$\overline{SEL}$	CLK	A	1B	2B
H	X	X	$1B_0$†	$2B_0$†
L		L	L‡	X
L		H	H‡	X

† Output level before indicated steady-state input conditions were established
‡ Two CLK edges are needed to propagate the data.

B-TO-A STORAGE ($\overline{OE}$ = L, DIR = L)

INPUTS				OUTPUT
CLK	$\overline{SEL}$	1B	2B	A
↑	H	X	L	L§
↑	H	X	H	H§
↑	L	L	X	L
↑	L	H	X	H

§ Two CLK edges are needed to propagate the data. The data is loaded in the first register when $\overline{SEL}$ is low and propagates to the second register when $\overline{SEL}$ is high.

C-TO-D STORAGE ($\overline{OE}$ = L)

INPUTS			OUTPUT	
$\overline{SEL}$	CLK	C	1D	2D
H	X	X	$1B_0$†	$2B_0$†
L	↑	L	L‡	L
L	↑	H	H‡	H

† Output level before indicated steady-state input conditions were established.
‡ Two CLK edges are needed to propagate the data.

OUTPUT ENABLE

INPUTS			OUTPUT		
CLK	$\overline{OE}$	DIR	A	1B, 2B	1D, 2D
↑	H	X	Z	Z	Z
↑	L	H	Z	Active	Active
↑	L	L	Active	Z	Active

RECOMMENDED OPERATING CONDITIONS

PARAMETER	MAX or MIN	ALVCHG 3V	UNIT
I_{CC}	MAX	0.04	mA
I_{OH} (A to B)	MAX	8	mA
I_{OH} (B to A)	MAX	6	mA
I_{OL} (A to B)	MAX	8	mA
I_{OL} (B to A)	MAX	6	mA

SWITCHING CHARACTERISTICS

PARAMETER		INPUT	OUTPUT	MAX or MIN	ALVCHG 3V
f_{max}				MIN	160
t_w	Pulse duration, CLK high or low			MIN	2.3
t_{su}	Setup time	A data before CLK ↑, high or low		MIN	1.4
		B data before CLK ↑, high or low		MIN	2
		C data before CLK ↑, high or low		MIN	1.3
		DIR before CLK ↑, high or low		MIN	2
		$\overline{SEL}$ before CLK ↑, high or low		MIN	2
t_h	Hold time	A data after CLK ↑, high or low		MIN	0.3
		B data after CLK ↑, high or low		MIN	0.3
		C data after CLK ↑, high or low		MIN	0.3
		DIR after CLK ↑, high or low		MIN	0.3
		$\overline{SEL}$ after CLK ↑, high or low		MIN	0.3
t_{pd}		CLK	A	MAX	5
			B		7.4
			D		7.2
t_{en}		CLK	A	MAX	6.2
			B		9.4
		$\overline{OE}$	A	MAX	6
			B		9.5
			D		7.9
t_{dis}		CLK	A	MAX	6.4
			B		7.8
		$\overline{OE}$	A	MAX	5
			B		7.6
			D		6.7

UNIT fmax : MHz other : ns

18-BIT TO 36-BIT REGISTERED BUS EXCHANGER WITH 3-STATE OUTPUTS

- SN74ALVCHG162282: A-Port Outputs Have Equivalent 50-Ω Series Resistors
- B-Port Outputs Have Equivalent 20-Ω Series Resistors

Logic Diagram

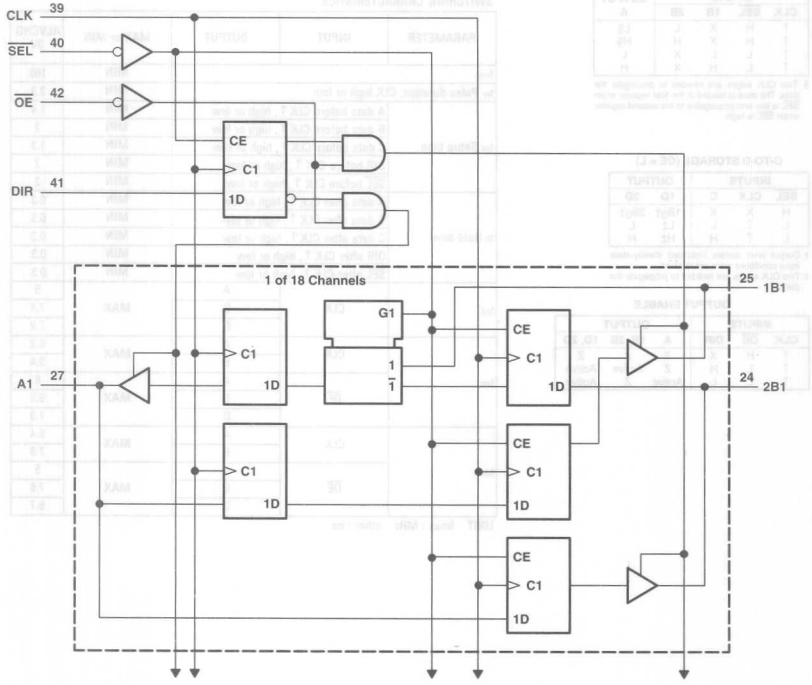

: OBSOLETED or NOT RECOMMENDED NEW DESIGNS

† Output level before indicated steady-state input conditions were established

‡ Two CLK edges are needed to propagate the data.

B-TO-A STORAGE
($\overline{OE}$ = L, DIR = L)

INPUTS				OUTPUT
CLK	$\overline{SEL}$	1B	2B	A
↑	H	X	L	L§
↑	H	X	H	H§
↑	L	L	X	L
↑	L	H	X	H

§ Two CLK edges are needed to propagate the data. The data is loaded in the first register when $\overline{SEL}$ is low and proparates to the second register when $\overline{SEL}$ is high.

OUTPUT ENABLE

INPUTS			OUTPUTS	
CLK	$\overline{OE}$	DIR	A	1B, 2B
↑	H	X	Z	Z
↑	L	H	Z	Active
↑	L	L	Active	Z

I_{OL} (A to B)	MAX	8	mA
I_{OL} (B to A)	MAX	6	mA

SWITCHING CHARACTERISTICS

PARAMETER	INPUT	OUTPUT	MAX or MIN	ALVCHG 3V
f_{max}			MIN	160
t_w Pulse duration, CLK high or low			MIN	2.3
t_{su} Setup time	A data before CLK ↑		MIN	1.5
	B data before CLK ↑		MIN	2
	DIR before CLK ↑		MIN	2
	$\overline{SEL}$ before CLK ↑		MIN	2
t_h Hold time	A data after CLK ↑		MIN	0.3
	B data after CLK ↑		MIN	0.3
	DIR after CLK ↑		MIN	0.3
	$\overline{SEL}$ after CLK ↑		MIN	0.3
t_{pd}	CLK	A	MAX	5
		B		7.4
t_{en}	CLK	A	MAX	6.3
		B		9.4
	$\overline{OE}$	A	MAX	6
		B		9.5
t_{dis}	CLK	A	MAX	6.4
		B		7.8
	$\overline{OE}$	A	MAX	5
		B		7.6

UNIT fmax : MHz other : ns

162334

16-BIT UNIVERSAL BUS DRIVER WITH 3-STATE OUTPUTS

- SN74ALVC162334: Output Ports Have Equivalent 26-Ω Series Resistors
- SN74ALVCH162334: Output Port Has Equivalent 26-Ω Series Resistors

Logic Diagram

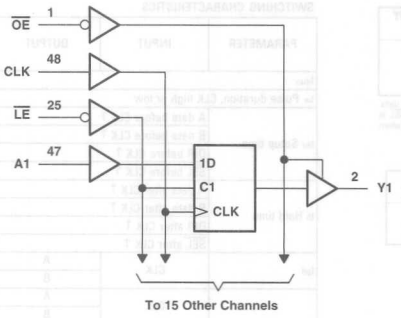

: OBSOLETED or NOT RECOMMENDED NEW DESIGNS

FUNCTION TABLE

INPUTS				OUTPUT
$\overline{OE}$	$\overline{LE}$	CLK	A	Y
H	X	X	X	Z
L	L	X	L	L
L	L	X	H	H
L	H	↑	L	L
L	H	↑	H	H
L	H	L or H	X	Y_0†

† Output level before the indicated steady-state input conditions were established

RECOMMENDED OPERATING CONDITIONS

PARAMETER	MAX or MIN	ALVC 3V	ALVCH 3V	UNIT
I_{CC}	MAX	0.04	0.04	mA
I_{OH}	MAX	-12	-12	mA
I_{OL}	MAX	12	12	mA

SWITCHING CHARACTERISTICS

PARAMETER	INPUT	OUTPUT	MAX or MIN	ALVC 3V	ALVCH 3V
f_{max}			MIN	150	150
t_w Pulse duration	$\overline{LE}$ low			3.3	3.3
	CLK high or low		MIN	3.3	3.3
t_{su} Setup time	Data before CLK ↑		MIN	1.5	1.5
	Data before $\overline{LE}$ ↑ CLK high		MIN	1.3	1.3
	Data before $\overline{LE}$ ↑ CLK low		MIN	1.2	1.2
t_h Hold time	Data after CLK ↑		MIN	0.9	0.9
	Data after $\overline{LE}$ ↑ CLK high		MIN	1.1	1.1
	Data after $\overline{LE}$ ↑ CLK low		MIN	1.1	1.1
t_{pd}	A	Y	MAX	3.9	3.9
	$\overline{LE}$			5	5
	CLK		MAX	4.9	4.9
t_{en}	$\overline{OE}$	Y		5.4	5.4
t_{dis}	$\overline{OE}$	Y	MAX	5	5

UNIT fmax : MHz other : ns

Logic Diagram

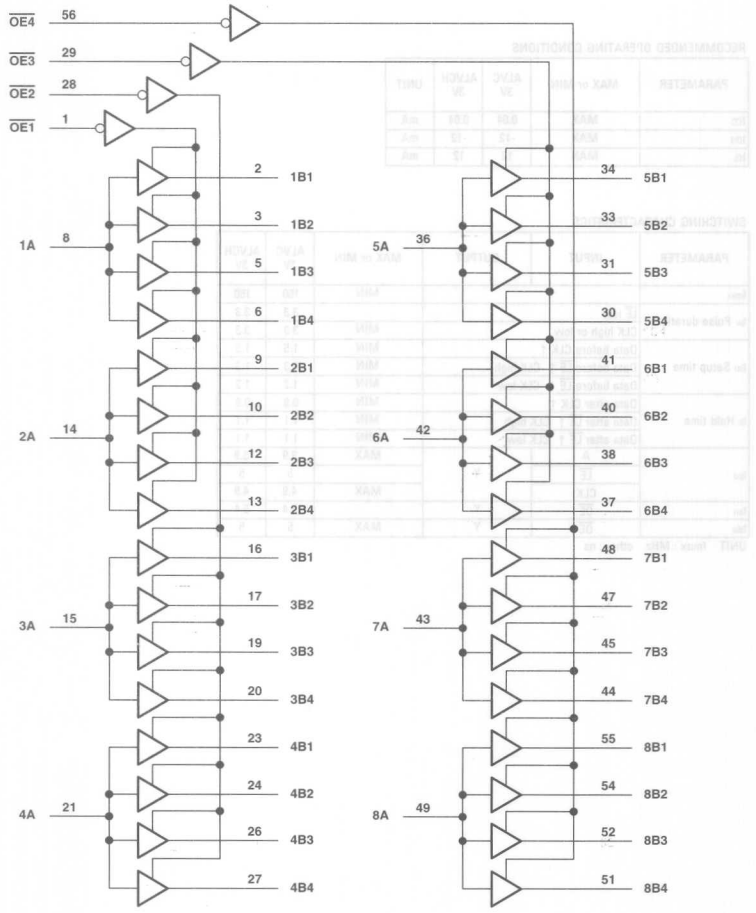

: OBSOLETED or NOT RECOMMENDED NEW DESIGNS

FUNCTION TABLE

RECOMMENDED OPERATING CONDITIONS

PARAMETER	MAX or MIN	ALVCH 3V	UNIT
I_{CC}	MAX	0.04	mA
I_{OH}	MAX	-12	mA
I_{OL}	MAX	12	mA

SWITCHING CHARACTERISTICS

PARAMETER	INPUT	OUTPUT	MAX or MIN	ALVCH 3V
t_{PLH}	A	B	MAX	4.4
t_{PHL}				4.4
t_{PZH}	$\overline{OE}$	B	MAX	5.7
t_{PZL}				5.7
t_{PHZ}	$\overline{OE}$	B	MAX	4.5
t_{PLZ}				4.5

UNIT: ns

162373

3.3-V ABT 16-BIT TRANSPARENT D-TYPE LATCHES WITH 3-STATE OUTPUTS

- SN74LVTH162373: Output Ports Have Equivalent 22-Ω Series Resistors

Logic Diagram

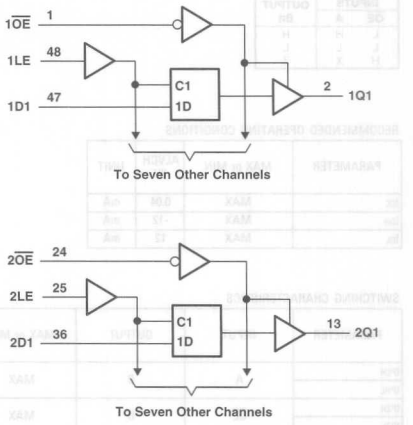

FUNCTION TABLE
(each 8-bit section)

INPUTS			OUTPUT
$\overline{OE}$	LE	D	Q
L	H	H	H
L	H	L	L
L	L	X	Q_0
H	X	X	Z

RECOMMENDED OPERATING CONDITIONS

PARAMETER	MAX or MIN	LVTH 3V	UNIT
I_{CC}	MAX	5	mA
I_{OH}	MAX	-12	mA
I_{OL}	MAX	12	mA

SWITCHING CHARACTERISTICS

PARAMETER	INPUT	OUTPUT	MAX or MIN	LVTH 3V
t_w Pulse duration, LE high or low			MIN	3
t_{su} Setup time	Data before LE ↓, data high		MIN	1
	Data before LE ↓, data low		MIN	1
t_h Hold time	Data after LE ↓, data high		MIN	1
	Data after LE ↓, data low		MIN	1
t_{PLH}	D	Q	MAX	4.6
t_{PHL}				4
t_{PLH}	LE	Q	MAX	5.1
t_{PHL}				4.6
t_{PZH}	$\overline{OE}$	Q	MAX	5.4
t_{PZL}				4.9
t_{PHZ}	$\overline{OE}$	Q	MAX	5.4
t_{PLZ}				5.1

UNIT: ns

3.3-V ABT 16-BIT EDGE-TRIGGERED D-TYPE FLIP-FLOPS WITH 3-STATE OUTPUTS

- SN74LVTH162374: Output Ports Have Equivalent 22-Ω Series Resistors
- SN74ALVCH162374: Output Ports Have Equivalent 26-Ω Series Resistors

Logic Diagram

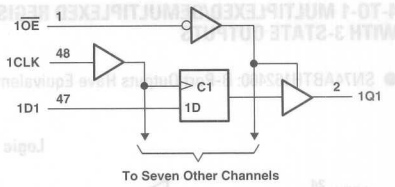

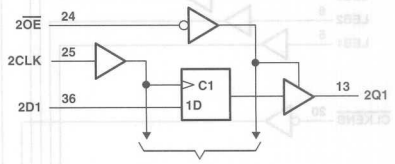

FUNCTION TABLE
(each flip-flop)

INPUTS			OUTPUT
$\overline{OE}$	CLK	D	Q
L	↑	H	H
L	↑	L	L
L	L	X	Q_0
H	X	X	Z

RECOMMENDED OPERATING CONDITIONS

PARAMETER	MAX or MIN	LVTH 3V	ALVCH 3V	UNIT
I_{CC}	MAX	5	0.04	mA
I_{OH}	MAX	-12	-12	mA
I_{OL}	MAX	12	12	mA

SWITCHING CHARACTERISTICS

PARAMETER	INPUT	OUTPUT	MAX or MIN	LVTH 3V	ALVCH 3V
f_{max}				160	150
t_w Pulse duration, CLK high or low			MIN	3	3.3
t_{su} Setup time	Data before CLK ↑, data high		MIN	1.8	1.9
	Data before CLK ↑, data low		MIN	1.8	1.9
t_h Hold time	Data after CLK ↑, data high		MIN	0.8	0.5
	Data after CLK ↑, data low		MIN	0.8	0.5
t_{PLH}	CLK	Q	MAX	5.3	4.6
t_{PHL}				4.9	4.6
t_{PZH}	$\overline{OE}$	Q	MAX	5.6	5.2
t_{PZL}				4.9	5.2
t_{PHZ}	$\overline{OE}$	Q	MAX	5.4	4.5
t_{PLZ}				5	4.5

UNIT fmax : MHz other : ns

PRODUCTION DATA information is current as of publication date. Products conform to specifications per the terms of Texas Instruments standard warranty. Production processing does not necessarily include testing of all parameters. See www.ti.com/sc/logic for the most current data sheets.

Logic Diagram

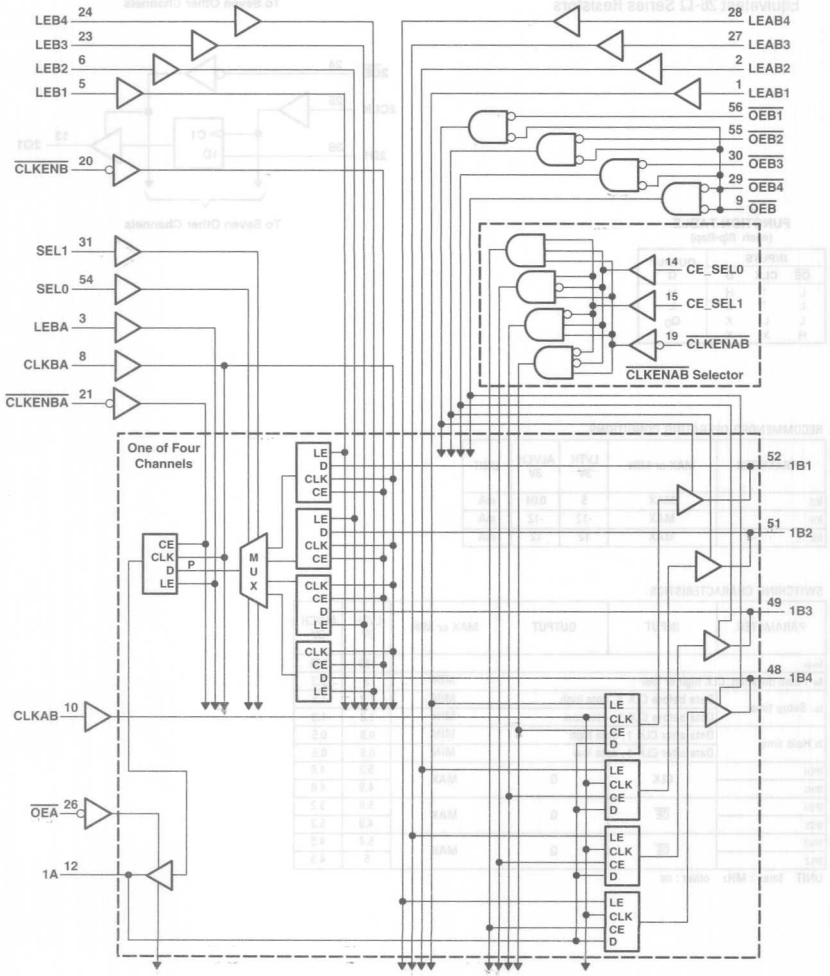

: OBSOLETED or NOT RECOMMENDED NEW DESIGNS

L	L	ACTIVE									

t_n = 1, 2, 3, 4

L	L	L	↑	L	L	L	L	A	A_0	A_0	A_0
L	L	H	↑	L	L	L	L	A_0	A	A_0	A_0
L	H	L	↑	L	L	L	L	A_0	A_0	A	A_0
L	H	H	↑	L	L	L	L	A_0	A_0	A_0	A
H	X	X	↑	L	L	L	L	A_0	A_0	A_0	A_0

B-TO-A STORAGE
(after point P)

INPUTS								P
CLKENB	CLKBA	LEB1	LEB2	LEB3	LEB4	SEL1	SEL0	
X	X	H	L	L	L	L	L	B1
X	X	L	H	L	L	L	H	B2
X	X	L	L	H	L	H	L	B3
X	X	L	L	L	H	H	H	B4
L	↑	L	L	L	L	L	L	B1
						L	H	B2
						H	L	B3
						H	H	B4
L	L	L	L	L	L	L	L	$B1_0$†
						L	H	$B2_0$†
						H	L	$B3_0$†
						H	H	$B4_0$†

† Output level before the indicated steady-state input conditions were established

B-TO-A STORAGE
(after point P)

INPUTS					OUTPUT
CLKENBA	CLKBA	LEBA	OEA	B	A
X	X	X	H	X	X
X	X	H	L	L	L
X	X	H	L	H	H
H	X	L	L	X	A_0†
L	↑	L	L	L	L
L	↑	L	L	H	H
L	L	L	L	X	A_0†

RECOMMENDED OPERATING CONDITIONS

PARAMETER	MAX or MIN	ABTH	UNIT
I_{CC}	MAX	32	mA
I_{OH} (A port)	MAX	-32	mA
I_{OH} (B port)	MAX	-12	mA
I_{OL} (A port)	MAX	64	mA
I_{OL} (B port)	MAX	12	mA

SWITCHING CHARACTERISTICS

PARAMETER			MAX or MIN	ABTH
f_{max}			MIN	160
t_w Pulse duration	CLKAB high or low		MIN	3.8
	CLKBA high or low		MIN	4.5
	LEAB1, 2, 3 or 4 high		MIN	2.8
	LEBA high		MIN	2.8
	LEB1, 2, 3 or 4 high		MIN	3
t_{su} Setup time	Before CLKAB ↑	A bus	MIN	2.5
		CE_SEL0/1	MIN	3.2
		$\overline{CLKENAB}$	MIN	3.2
	Before LEAB1, 2, 3, or 4 ↓	A bus	MIN	3.6
	Before CLKBA ↑	B bus	MIN	3.8
		$\overline{CLKENB}$	MIN	2.3
		$\overline{CLKENBA}$	MIN	2.5
		LEB1, 2, 3 or 4	MIN	4.3
		SEL0/1	MIN	4.5
	Before LEB1, 2, 3, or 4 ↓	B bus	MIN	3.2
	Before CLKBA ↑	B bus	MIN	4
		LEB1, 2, 3 or 4	MIN	4.4
		SEL0/1	MIN	4.3
t_h Hold time	after CLKAB ↑	A bus	MIN	0.5
		CE_SEL0/1	MIN	1.1
		$\overline{CLKENAB}$	MIN	0.5
	after LEAB1, 2, 3, or 4 ↓	A bus	MIN	1.2
	after CLKBA ↑	B bus	MIN	1.3
		$\overline{CLKENB}$	MIN	1
		$\overline{CLKENBA}$	MIN	1
		SEL0/1	MIN	0
	after LEB1, 2, 3, or 4 ↓	B bus	MIN	1.5
	after CLKBA ↑	B bus	MIN	0.4
		SEL0/1	MIN	0.1

PARAMETER	INPUT	OUTPUT	MAX or MIN	ABTH
t_{PLH}	B	A	MAX	6.5
t_{PHL}				6.5
t_{PZH}	$\overline{OEA}$	A	MAX	5.6
t_{PZL}				5.5
t_{PHZ}	$\overline{OEA}$	A	MAX	5.9
t_{PLZ}				6.5
t_{PLH}	A	B	MAX	6.2
t_{PHL}				6.5
t_{PZH}	$\overline{OEB}$	B	MAX	6.8
t_{PZL}				6.3
t_{PHZ}	$\overline{OEB}$	B	MAX	6.2
t_{PLZ}				5.8
t_{PZH}	$\overline{OEB1}$, $\overline{2}$, $\overline{3}$, $\overline{4}$	B	MAX	6.6
t_{PZL}				6.2
t_{PHZ}	$\overline{OEB1}$, $\overline{2}$, $\overline{3}$, $\overline{4}$	B	MAX	5.3
t_{PLZ}				4.9
t_{PLH}	CLKBA	A	MAX	7.4
t_{PHL}				7.7
t_{PLH}	CLKAB	B	MAX	6.5
t_{PHL}				6.5
t_{PLH}	LEBA	A	MAX	5.8
t_{PHL}				5.8
t_{PLH}	LEAB1, 2, 3, 4	B	MAX	6.2
t_{PHL}				6.2
t_{PLH}	LEBA1, 2, 3, 4	A	MAX	7.2
t_{PHL}				6.8
t_{PLH}	SEL	A	MAX	7.5
t_{PHL}				6.9

UNIT: ns

PRODUCTION DATA information is current as of publication date. Products conform to specifications per the terms of Texas Instruments standard warranty. Production processing does not necessarily include testing of all parameters. See www.ti.com/sc/logic for the most current data sheets.

162500

18-BIT UNIVERSAL BUS TRANSCEIVER WITH 3-STATE OUTPUTS

- SN74ABT162500: B-Port Outputs Have Equivalent 25-Ω Series Resistors

Logic Diagram

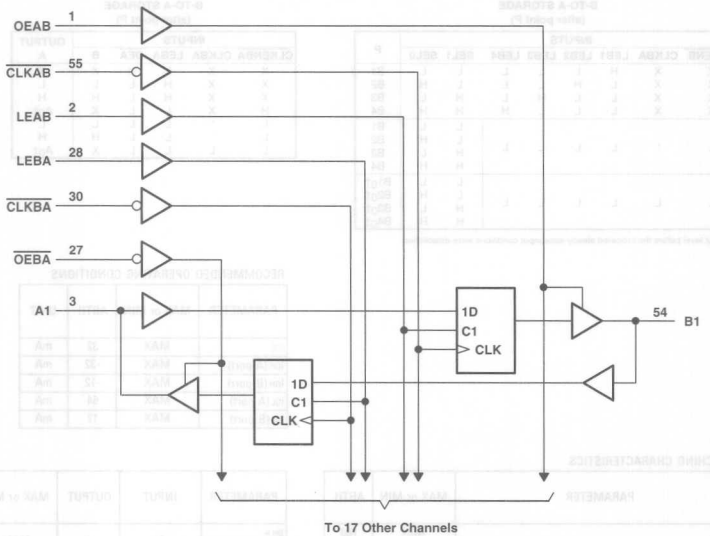

: OBSOLETED or NOT RECOMMENDED NEW DESIGNS

FUNCTION TABLE

INPUTS				OUTPUT
OEAB	LEAB	$\overline{CLKAB}$	A	B
L	X	X	X	Z
H	H	X	L	L
H	H	X	H	H
H	L	↓	L	L
H	L	↓	H	H
H	L	H	X	B_0‡
H	L	L	X	B_0§

‡ Output level before the indicated steady-state input conditions were established.
§ Output level before the indicated steady-state input conditions were established, provided that $\overline{CLKAB}$ was low before LEAB went low.

RECOMMENDED OPERATING CONDITIONS

PARAMETER	MAX or MIN	ABT	UNIT
I_{CC}	MAX	36	mA
I_{OH} (A port)	MAX	-32	mA
I_{OH} (B port)	MAX	-12	mA
I_{OL} (A port)	MAX	64	mA
I_{OL} (B port)	MAX	12	mA

SWITCHING CHARACTERISTICS

PARAMETER	INPUT	OUTPUT	MAX or MIN	ABT
f_{max}			MIN	150
t_w Pulse duration	LEAB or LEBA high		MIN	2.5
	$\overline{CLKAB}$ or $\overline{CLKBA}$ high or low		MIN	3
t_{su} Setup time	A before $\overline{CLKAB}$ ↓		MIN	3.3
	B before $\overline{CLKBA}$ ↓		MIN	3.3
	A before LEAB ↓ or LEBA ↓ $\overline{CLK}$ high		MIN	1
	A before LEAB ↓ or LEBA ↓ $\overline{CLK}$ low		MIN	2.5
t_h Hold time	A after $\overline{CLKAB}$ ↓ or B after $\overline{CLKBA}$ ↓		MIN	0
	A after LEAB ↓ or B after LEBA ↓		MIN	2
t_{PLH}	A or B	B or A	MAX	4.8
t_{PHL}				5.7
t_{PZH}	LEAB or LEBA	B or A	MAX	5.6
t_{PZL}				5.9
t_{PHZ}	$\overline{CLKAB}$ or $\overline{CLKBA}$	B or A	MAX	5.9
t_{PLZ}				6
t_{PZH}	OEAB	B	MAX	5.3
t_{PZL}				5.4
t_{PHZ}	OEAB	B	MAX	6.5
t_{PLZ}				5.8
t_{PZH}	$\overline{OEBA}$	A	MAX	5.3
t_{PZL}				5.4
t_{PHZ}	$\overline{OEBA}$	A	MAX	6.5
t_{PLZ}				5.8

UNIT fmax : MHz other : ns

18-BIT UNIVERSAL BUS TRANSCEIVERS WITH 3-STATE OUTPUTS

- SN74ABT162501: B-Port Outputs Have Equivalent 25-Ω Series Resistors

Logic Diagram

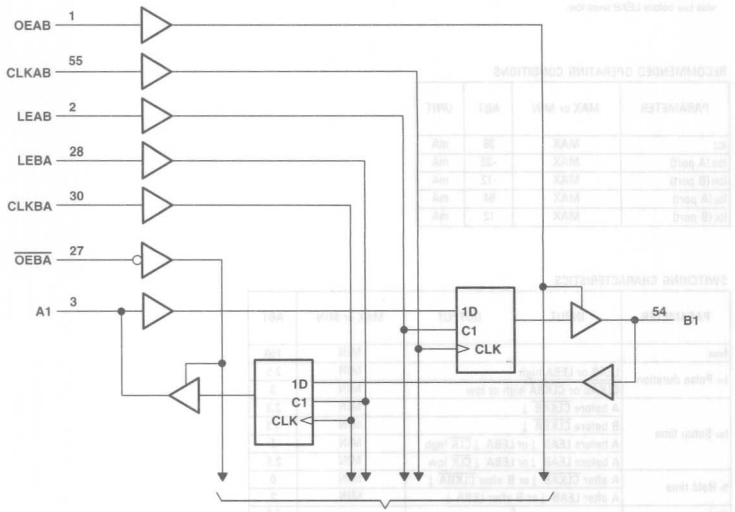

: OBSOLETED or NOT RECOMMENDED NEW DESIGNS

FUNCTION TABLE†

INPUTS				OUTPUT
OEAB	LEAB	CLKAB	A	Y
L	X	X	X	Z
H	H	X	L	L
H	H	X	H	H
H	L	↓	L	L
H	L	↓	H	H
H	L	H	X	B_0‡
H	L	L	X	B_0§

† A-to-B data flow is shown: B-to-A flow is similar but uses $\overline{OEBA}$, LEBA, and CLKBA.
‡ Output level before the indicated steady-state input conditions were established, provided that CLKAB was high before LEAB went low
§ Output level before the indicated steady-state input conditions were established

RECOMMENDED OPERATING CONDITIONS

PARAMETER	MAX or MIN	ABT	UNIT
I_{CC}	MAX	36	mA
I_{OH} (A port)	MAX	-32	mA
I_{OH} (B port)	MAX	-12	mA
I_{OL} (A port)	MAX	64	mA
I_{OL} (B port)	MAX	12	mA

SWITCHING CHARACTERISTICS

PARAMETER	INPUT	OUTPUT	MAX or MIN	ABT
f_{max}			MIN	150
t_w Pulse duration	LEAB or LEBA high		MIN	3
	CLKAB or CLKBA high or low		MIN	3.3
t_{su} Setup time	A before CLKAB ↑		MIN	4.3
	B before CLKBA ↑		MIN	4.3
	A before LEAB ↓or LEBA ↓CLK high		MIN	2.5
	A before LEAB ↓or LEBA ↓CLK low		MIN	1
t_h Hold time	A after CLKAB ↑or B after CLKBA ↑		MIN	0
	A after LEAB ↓or B after LEBA ↓		MIN	2
t_{PLH}	A or B	B or A	MAX	4.8
t_{PHL}				5.7
t_{PZH}	LEAB or LEBA	B or A	MAX	5.6
t_{PZL}				5.9
t_{PHZ}	CLKAB or CLKBA	B or A	MAX	5.5
t_{PLZ}				5.3
t_{PZH}	OEAB	B	MAX	5.3
t_{PZL}				5.4
t_{PHZ}	OEAB	B	MAX	6.5
t_{PLZ}				5.8
t_{PZH}	$\overline{OEBA}$	A	MAX	5.3
t_{PZL}				5.4
t_{PHZ}	$\overline{OEBA}$	A	MAX	6.5
t_{PLZ}				5.8

UNIT fmax : MHz other : ns

Logic Diagram

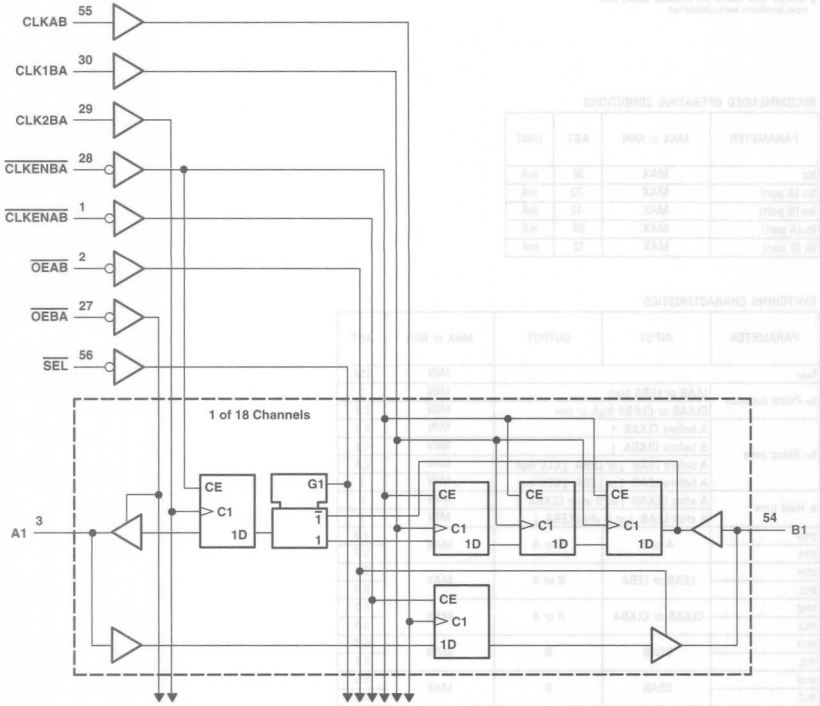

: OBSOLETED or NOT RECOMMENDED NEW DESIGNS

FUNCTION TABLE

A-TO-B STORAGE($\overline{OEAB}$=L)

INPUTS			OUTPUT
$\overline{CLKNAB}$	OLKAB	A	B
H	X	X	B_0†
L	↑	L	L
L	↑	H	H

† Output level before the indicated steady-state input conditions were established

B-TO-A STORAGE ($\overline{OEBA}$ = L)

INPUTS					OUTPUT
$\overline{CLKENBA}$	$\overline{CLK2BA}$	CLK1BA	SEL	B	A
H	X	X	X	X	A_0†
L	↑	X	H	L	L
L	↑	X	H	H	H
L	↑	↑	L	L	L‡
L	↑	↑	L	H	H‡

† Output level before the indicated steady-state input conditions were established

‡ Three CLK1BA edges and one $\overline{CLK2BA}$ edge are needed to propagate data from B to A when $\overline{SEL}$ is low.

RECOMMENDED OPERATING CONDITIONS

PARAMETER	MAX or MIN	ALVCH 3V	UNIT
I_{CC}	MAX	0.04	mA
I_{OH} (A port)	MAX	-24	mA
I_{OH} (B port)	MAX	-12	mA
I_{OL} (A port)	MAX	24	mA
I_{OL} (B port)	MAX	12	mA

SWITCHING CHARACTERISTICS

PARAMETER	INPUT	OUTPUT	MAX or MIN	ALVCH 3V
f_{max}			MIN	150
t_w Pulse duration, CLK high or low			MIN	3
t_{su} Setup time	A data before CLKAB ↑		MIN	1.3
	B data before CLK2BA ↑		MIN	1.7
	B data before CLK1BA ↑		MIN	1.1
	$\overline{SEL}$ before CLK2BA ↑		MIN	3.3
	$\overline{CLKENAB}$ before CLKAB ↑		MIN	1.6
	$\overline{CLKENBA}$ before CLK1BA ↑		MIN	2.1
	$\overline{CLKENBA}$ before CLK2BA ↑		MIN	2.2
t_h Hold time	A data after CLKAB ↑		MIN	0.9
	B data after CLK2BA ↑		MIN	0.6
	B data after CLK1BA ↑		MIN	1
	$\overline{SEL}$ after CLK2BA ↑		MIN	0.1
	$\overline{CLKENAB}$ after CLKAB ↑		MIN	0.3
	$\overline{CLKENBA}$ after CLK1BA ↑		MIN	0.1
	$\overline{CLKENBA}$ after CLK2BA ↑		MIN	0
t_{pd}	CLKAB	B	MAX	4.7
	CLK2BA	A		4.2
t_{en}	$\overline{OEBA}$	A	MAX	5.1
	$\overline{OEAB}$	B		5.7
t_{dis}	$\overline{OEBA}$	A	MAX	4.9
	$\overline{OEAB}$	B		4.9

UNIT fmax : MHz other : ns

PRODUCTION DATA information is current as of publication date. Products conform to specifications per the terms of Texas Instruments standard warranty. Production processing does not necessarily include testing of all parameters. See www.ti.com/sc/logic for the most current data sheets.

3.3-V ABT 16-BIT BUFFERS/DRIVERS WITH 3-STATE OUTPUTS

- SN74LVTH162541: Output Ports Have Equivalent 22-Ω Series Resistors

Logic Diagram

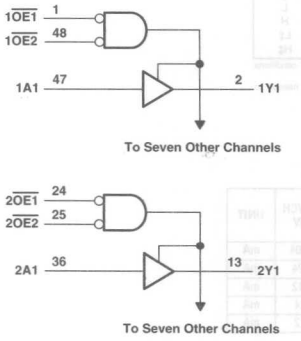

: OBSOLETED or NOT RECOMMENDED NEW DESIGNS

FUNCTION TABLE
(each 8-bit section)

INPUTS			OUTPUT
$\overline{OE1}$	$\overline{OE2}$	A	Y
L	L	L	L
L	L	H	H
H	X	X	Z
X	H	X	Z

RECOMMENDED OPERATING CONDITIONS

PARAMETER	MAX or MIN	LVTH 3V	UNIT
I_{CC}	MAX	5	mA
I_{OH}	MAX	-12	mA
I_{OL}	MAX	12	mA

SWITCHING CHARACTERISTICS

PARAMETER	INPUT	OUTPUT	MAX or MIN	LVTH 3V
t_{PLH}	A	Y	MAX	4.1
t_{PHL}				4.1
t_{PZH}	$\overline{OE}$	Y	MAX	5
t_{PZL}				4.8
t_{PHZ}	$\overline{OE}$	Y	MAX	5.9
t_{PLZ}				5.4

UNIT: ns

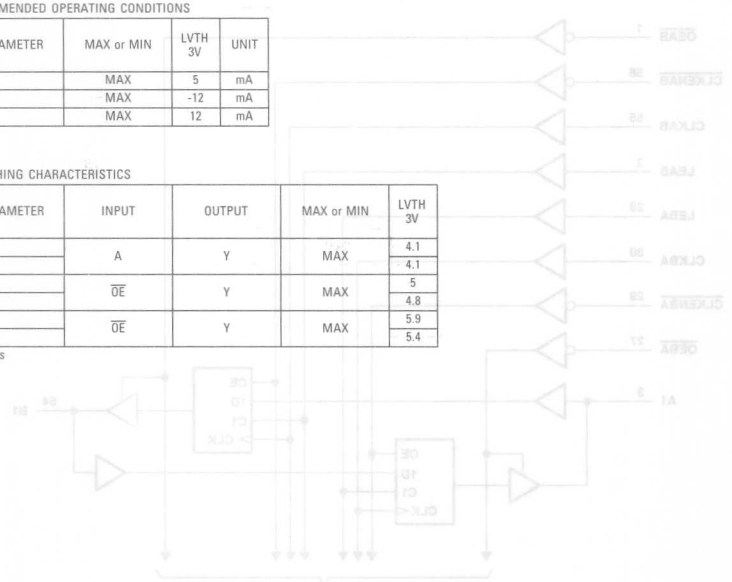

162601

18-BIT UNIVERSAL BUS TRANSCEIVER WITH 3-STATE OUTPUTS

- SN74ABT162601: B-Port Outputs Have Equivalent 25-Ω Series Resistors
- SN74ALVCH162601: B-Port Outputs Have Equivalent 26-Ω Series Resistors

Logic Diagram

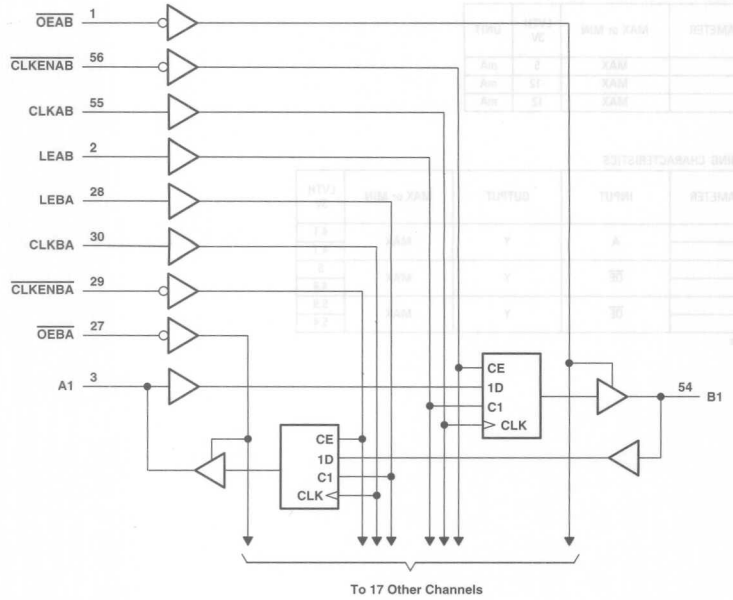

: OBSOLETED or NOT RECOMMENDED NEW DESIGNS

FUNCTION TABLE

INPUTS					OUTPUT
$\overline{CLKENAB}$	$\overline{OEAB}$	$\overline{LEAB}$	CLKAB	A	B
X	H	X	X	X	Z
X	L	H	X	L	L
X	L	H	X	H	H
H	L	L	X	X	B_0‡
H	L	L	X	X	B_0‡
L	L	L	↑	L	L
L	L	L	↑	H	H
L	L	L	L	X	B_0‡
L	L	L	H	X	B_0§

† A-to-B data flow is shown: B-to-A flow is similar but uses $\overline{OEBA}$, LEBA, CLKBA, and $\overline{CLKENBA}$.
‡ Output level before the indicated steady-state input conditions were established.
§ Output level before the indicated steady-state input conditions were established, provided that CLKAB was low before LEAB went low.

RECOMMENDED OPERATING CONDITIONS

PARAMETER	MAX or MIN	ABT	ALVCH 3V	UNIT
I_{CC}	MAX	36	0.04	mA
I_{OH} (A port)	MAX	-32	-24	mA
I_{OH} (B port)	MAX	-12	-12	mA
I_{OL} (A port)	MAX	64	24	mA
I_{OL} (B port)	MAX	12	12	mA

SWITCHING CHARACTERISTICS

PARAMETER	INPUT	OUTPUT	MAX or MIN	ABT	ALVCH 3V
f_{max}			MIN	150	150
t_w Pulse duration	LEAB or LEBA high		MIN	2.5	3.3
	CLKAB or CLKBA high or low		MIN	3	3.3
t_{su} Setup time	Data before CLK ↑		MIN	4.3	2.1
	A before LEAB ↓ or B before LEBA ↓, CLK high		MIN	2.5	1.6
	A before LEAB ↓ or B before LEBA ↓, CLK low		MIN	1	1.1
	$\overline{CLKEN}$ before ↑		MIN	2.7	1.7
t_h Hold time	Data after CLK ↑		MIN	0	0.8
	A after LEAB ↓ or B after LEBA ↓, CLK high		MIN	0.5	1.4
	A after LEAB ↓ or B after LEBA ↓, CLK low		MIN	0.5	1.7
	$\overline{CLKEN}$ after ↑		MIN	0	0.6
t_{PLH}	A	B	MAX	4.8	4.5
t_{PHL}				5.7	4.5
t_{PLH}	B	A	MAX	4	4.1
t_{PHL}				4.9	4.1
t_{PLH}	LEBA	A	MAX	5	4.7
t_{PHL}				5	4.7
t_{PLH}	LEAB	B	MAX	5.6	5.1
t_{PHL}				5.9	5.1
t_{PLH}	CLKBA	A	MAX	5.3	5
t_{PHL}				5	5
t_{PLH}	CLKAB	B	MAX	5.5	5.5
t_{PHL}				5.3	5.5
t_{PZH}	$\overline{OEBA}$	A	MAX	5.1	5.2
t_{PZL}				5.4	5.2
t_{PZH}	$\overline{OEAB}$	B	MAX	6.1	5.7
t_{PZL}				5.7	5.7
t_{PHZ}	$\overline{OEBA}$	A	MAX	6.2	4.4
t_{PLZ}				5.4	4.4
t_{PHZ}	$\overline{OEAB}$	B	MAX	5.4	4.8
t_{PLZ}				5.2	4.8

UNIT fmax : MHz other : ns

PRODUCTION DATA information is current as of publication date. Products conform to specifications per the terms of Texas Instruments standard warranty. Production processing does not necessarily include testing of all parameters. See www.ti.com/sc/logic for the most current data sheets.

26-Ω Series Resistors

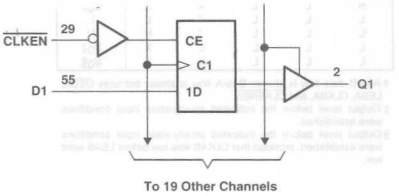

FUNCTION TABLE
(each flip-flop)

INPUTS				OUTPUT
$\overline{OE}$	$\overline{CLKEN}$	CLK	D	Q
L	H	X	X	Q_0
L	L	↑	H	H
L	L	↑	L	L
L	L	L or H	X	Q_0
H	X	X	X	Z

RECOMMENDED OPERATING CONDITIONS

PARAMETER	MAX or MIN	ALVCH 3V	UNIT
I_{CC}	MAX	0.04	mA
I_{OH}	MAX	-12	mA
I_{OL}	MAX	12	mA

SWITCHING CHARACTERISTICS

PARAMETER	INPUT	OUTPUT	MAX or MIN	ALVCH 3V
f_{max}			MIN	150
t_w Pulse duration	CLK high or low		MIN	3.3
t_{su} Setup time	Data before CLK ↑		MIN	3.1
	$\overline{CLKEN}$ before CLK ↑		MIN	2.7
t_h Hold time	Data after CLK ↑		MIN	0
	$\overline{CLKEN}$ after CLK ↑		MIN	0
t_{PLH}	CLK	Q	MAX	5.3
t_{PHL}				5.3
t_{PZH}	OE	Q	MAX	5.8
t_{PZL}				5.8
t_{PHZ}	OE	Q	MAX	5
t_{PLZ}				5

UNIT fmax : MHz other : ns

: OBSOLETED or NOT RECOMMENDED NEW DESIGNS

Logic Diagram

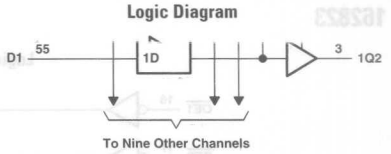

FUNCTION TABLE
(each flip flop)

INPUT			OUTPUT
$\overline{OE}$n↑	CLK	D	Q
L	↑	H	H
L	↑	L	L
L	L	X	Q_0
H	X	X	Z

†n = 1,2

RECOMMENDED OPERATING CONDITIONS

PARAMETER	MAX or MIN	ALVCH 3V	UNIT
I_{CC}	MAX	0.04	mA
I_{OH}	MAX	-12	mA
I_{OL}	MAX	12	mA

SWITCHING CHARACTERISTICS

PARAMETER	INPUT	OUTPUT	MAX or MIN	ALVCH 3V
f_{max}			MIN	150
t_w Pulse duration	CLK high or low		MIN	3.3
t_{su} Setup time	Data before CLK ↑		MIN	1.4
t_h Hold time	Data after CLK ↑		MIN	1
t_{PLH}	CLK	Q	MAX	5.4
t_{PHL}				5.4
t_{PZH}	$\overline{OE}$	Q	MAX	5.6
t_{PZL}				5.6
t_{PHZ}	$\overline{OE}$	Q	MAX	5
t_{PLZ}				5

UNIT fmax : MHz other : ns

PRODUCTION DATA information is current as of publication date. Products conform to specifications per the terms of Texas Instruments standard warranty. Production processing does not necessarily include testing of all parameters. See www.ti.com/sc/logic for the most current data sheets.

162823

18-BIT BUS-INTERFACE FLIP-FLOPS WITH 3-STATE OUTPUTS

- SN74ABT162823A: Output Ports Have Equivalent 25-Ω Series Resistors

Logic Diagram

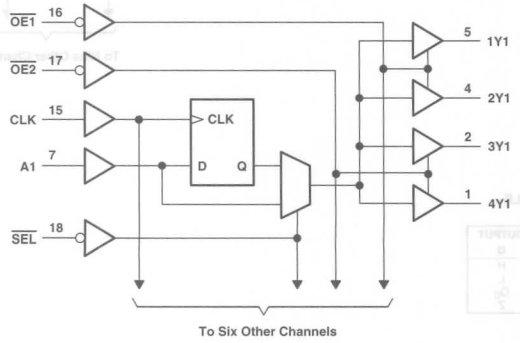

FUNCTION TABLE

INPUTS					OUTPUT
OE	CLR	CLENK	CLK	D	Q
L	L	X	X	X	L
L	H	L	↑	H	H
L	H	L	↑	L	L
L	H	L	L	X	Q_0
L	H	H	X	X	Q_0
H	X	X	X	X	Z

RECOMMENDED OPERATING CONDITIONS

PARAMETER	MAX or MIN	ABT	UNIT
I_{CC}	MAX	80	mA
I_{OH}	MAX	-12	mA
I_{OL}	MAX	12	mA

SWITCHING CHARACTERISTICS

PARAMETER	INPUT	OUTPUT	MAX or MIN	ABT
f_{max}			MIN	150
t_w Pulse duration	$\overline{CLR}$ low		MIN	3.3
	CLK high or low		MIN	3.3
t_{su} Setup time	$\overline{CLR}$ inactive		MIN	1.6
	Data before CLK ↑		MIN	2
	$\overline{CLKEN}$ low before CLK ↑		MIN	2.8
t_h Hold time	Data after CLK ↑		MIN	1.2
	$\overline{CLKEN}$ low after CLK ↑		MIN	0.6
t_{PLH}	CLK	Q	MAX	7.5
t_{PHL}				6.7
t_{PHL}	$\overline{CLR}$	Q	MAX	7
t_{PZH}	$\overline{OE}$	Q	MAX	5.9
t_{PZL}				7
t_{PHZ}	$\overline{OE}$	Q	MAX	6.6
t_{PLZ}				9

UNIT fmax : MHz other : ns

: OBSOLETED or NOT RECOMMENDED NEW DESIGNS

162825

18-BIT BUFFERS/DRIVERS WITH 3-STATE OUTPUTS

- SN74ABT162825: Output Ports Have Equivalent 25-Ω Series Resistors

Logic Diagram

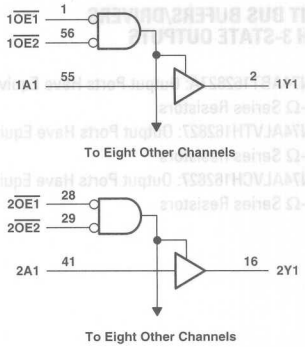

FUNCTION TABLE

INPUTS			OUTPUT
$\overline{OE1}$	$\overline{OE2}$	A	Y
L	L	L	L
L	L	H	H
H	X	X	Z
X	H	X	Z

RECOMMENDED OPERATING CONDITIONS

PARAMETER	MAX or MIN	ABT	UNIT
I_{CC}	MAX	32	mA
I_{OH}	MAX	-12	mA
I_{OL}	MAX	12	mA

SWITCHING CHARACTERISTICS

PARAMETER	INPUT	OUTPUT	MAX or MIN	ABT
t_{PLH}	A	Y	MAX	3.9
t_{PHL}				4.7
t_{PZH}	$\overline{OE}$	Y	MAX	6.9
t_{PZL}				6.3
t_{PHZ}	$\overline{OE}$	Y	MAX	6.6
t_{PLZ}				6.3

UNIT: ns

PRODUCTION DATA information is current as of publication date. Products conform to specifications per the terms of Texas Instruments standard warranty. Production processing does not necessarily include testing of all parameters. See www.ti.com/sc/logic for the most current data sheets.

162827

- SN74ALVTH162827: Output Ports Have Equivalent 30-Ω Series Resistors
- SN74ALVCH162827: Output Ports Have Equivalent 26-Ω Series Resistors

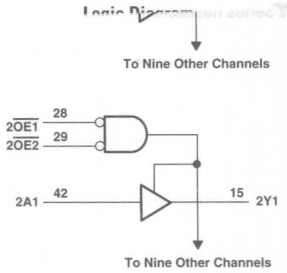

FUNCTION TABLE
(each flip flop)

INPUTS			OUTPUT
$\overline{OE1}$	$\overline{OE2}$	A	Y
L	L	L	L
L	L	H	H
H	X	X	Z
X	H	X	Z

†n = 1,2

RECOMMENDED OPERATING CONDITIONS

PARAMETER	MAX or MIN	ABT	ALVTH 3V	ALVCH 3V	UNIT
I_{CC}	MAX	32	5.5	0.04	mA
I_{OH}	MAX	-12	-12	-12	mA
I_{OL}	MAX	12	12	12	mA

SWITCHING CHARACTERISTICS

PARAMETER	INPUT	OUTPUT	MAX or MIN	ABT	ALVTH 3V	ALVCH 3V
t_{PLH}	A	Y	MAX	3.9	3.9	3.8
t_{PHL}				4.7	3.7	3.8
t_{PZH}	$\overline{OE}$	Y	MAX	6.9	5.6	5.1
t_{PZL}				6.3	4.1	5.1
t_{PHZ}	$\overline{OE}$	Y	MAX	6.6	6.3	4.7
t_{PLZ}				6.3	5.1	4.7

UNIT: ns

: OBSOLETED or NOT RECOMMENDED NEW DESIGNS

162830

1-BIT TO 2-BIT ADDRESS DRIVER WITH 3-STATE OUTPUTS

- SN74ALVCH162830, SN74ALVCHS162830: Output Ports Have Equivalent 26-Ω Series Resistors

Logic Diagram

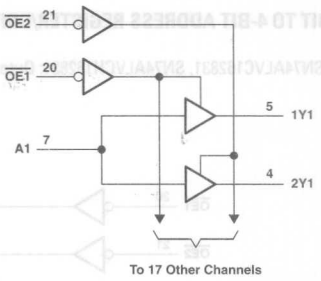

FUNCTION TABLE

INPUTS			OUTPUTS	
OE1	OE2	A	1Yn	2Yn
L	H	H	H	Z
L	H	L	L	Z
H	L	H	Z	H
H	L	L	Z	L
L	L	H	H	H
L	L	L	L	L
H	H	X	Z	Z

RECOMMENDED OPERATING CONDITIONS

PARAMETER	MAX or MIN	ALVCH 3V	ALVCHS 3V	UNIT
I_{CC}	MAX	0.04	0.04	mA
I_{OH}	MAX	-12	-12	mA
I_{OL}	MAX	12	12	mA

SWITCHING CHARACTERISTICS

PARAMETER	INPUT	OUTPUT	MAX or MIN	ALVCH 3V	ALVCHS 3V
t_{PLH}	A	Y	MAX	3.5	3.5
t_{PHL}				3.5	3.5
t_{PZH}	$\overline{OE}$	Y	MAX	4.8	4.8
t_{PZL}				4.8	4.8
t_{PHZ}	$\overline{OE}$	Y	MAX	5.2	5.2
t_{PLZ}				5.2	5.2

UNIT: ns

PRODUCTION DATA information is current as of publication date. Products conform to specifications per the terms of Texas Instruments standard warranty. Production processing does not necessarily include testing of all parameters. See www.ti.com/sc/logic for the most current data sheets.

162831

1-BIT TO 4-BIT ADDRESS REGISTER/DRIVER WITH 3-STATE OUTPUTS

- SN74ALVC162831, SN74ALVCH162831: Output Ports Have Equivalent 26-Ω Series Resistors

Logic Diagram

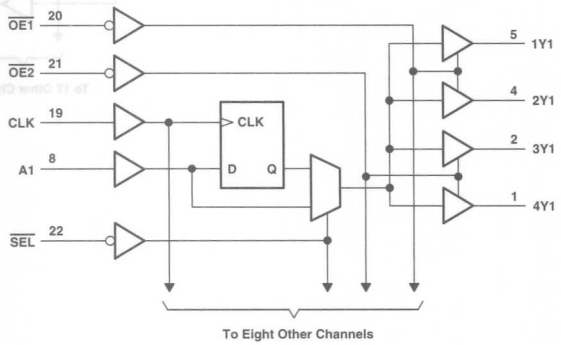

FUNCTION TABLE

INPUTS				OUTPUT
$\overline{OE}$	$\overline{SEL}$	CLK	A	Y
H	X	X	X	Z
L	H	X	L	L
L	H	X	H	H
L	L	↑	L	L
L	L	↑	H	H

RECOMMENDED OPERATING CONDITIONS

PARAMETER	MAX or MIN	ALVC 3V	ALVCH 3V	UNIT
I_{CC}	MAX	0.04	0.04	mA
I_{OH}	MAX	-12	-12	mA
I_{OL}	MAX	12	12	mA

SWITCHING CHARACTERISTICS

PARAMETER	INPUT	OUTPUT	MAX or MIN	ALVC 3V	ALVCH 3V
f_{max}			MIN	150	150
t_w Pulse duration	CLK high or low		MIN	3.3	3.3
t_{su} Setup time	A data before CLK ↑		MIN	1.6	1.6
t_h Hold time	A data after CLK ↑		MIN	1.1	1.1
t_{PLH}	A	Y	MAX	4.3	4.3
t_{PHL}				4.3	4.3
t_{PLH}	CLK	Y	MAX	4.7	4.7
t_{PHL}				4.7	4.7
t_{PLH}	$\overline{SEL}$	Y	MAX	4.8	4.8
t_{PHL}				4.8	4.8
t_{PZH}	$\overline{OE}$	Y	MAX	5.1	5.1
t_{PZL}				5.1	5.1
t_{PHZ}	$\overline{OE}$	Y	MAX	5.1	5.1
t_{PLZ}				5.1	5.1

UNIT fmax : MHz other : ns

: OBSOLETED or NOT RECOMMENDED NEW DESIGNS

162832

1-BIT TO 4-BIT ADDRESS REGISTER/DRIVER WITH 3-STATE OUTPUTS

- SN74ALVCH162832: Output Ports Have Equivalent 26-Ω Series Resistors

Logic Diagram

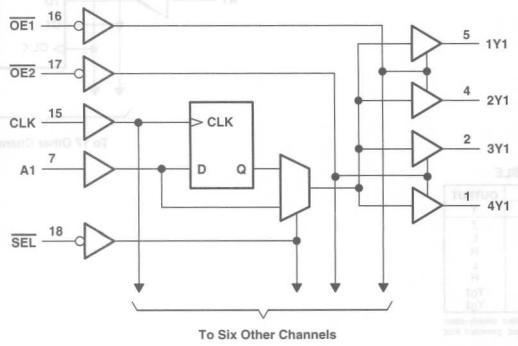

FUNCTION TABLE

INPUTS				OUTPUT
$\overline{OE}$	$\overline{SEL}$	CLK	A	Y
H	X	X	X	Z
L	H	X	L	L
L	H	X	H	H
L	L	↑	L	L
L	L	↑	H	H

RECOMMENDED OPERATING CONDITIONS

PARAMETER	MAX or MIN	ALVCH 3V	UNIT
I_{CC}	MAX	0.04	mA
I_{OH}	MAX	-12	mA
I_{OL}	MAX	12	mA

SWITCHING CHARACTERISTICS

PARAMETER	INPUT	OUTPUT	MAX or MIN	ALVCH 3V
f_{max}			MIN	150
t_w Pulse duration	CLK high or low		MIN	3.3
t_{su} Setup time	A data before CLK ↑		MIN	1.6
t_h Hold time	A data after CLK ↑		MIN	1.1
t_{PLH}	A	Y	MAX	4.3
t_{PHL}				4.3
t_{PLH}	CLK	Y	MAX	4.7
t_{PHL}				4.7
t_{PLH}	$\overline{SEL}$	Y	MAX	4.8
t_{PHL}				4.8
t_{PZH}	$\overline{OE}$	Y	MAX	5.1
t_{PZL}				5.1
t_{PHZ}	$\overline{OE}$	Y	MAX	5.1
t_{PLZ}				5.1

UNIT fmax : MHz other : ns

PRODUCTION DATA information is current as of publication date. Products conform to specifications per the terms of Texas Instruments standard warranty. Production processing does not necessarily include testing of all parameters. See www.ti.com/sc/logic for the most current data sheets.

162834

18-BIT UNIVERSAL BUS DRIVER

Logic Diagram

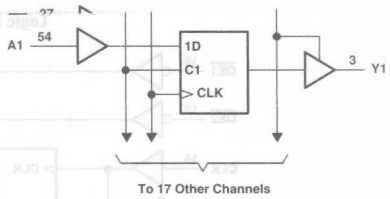

FUNCTION TABLE

INPUTS				OUTPUT
$\overline{OE}$	$\overline{LE}$	CLK	A	Y
H	X	X	X	Z
L	L	X	L	L
L	L	X	H	H
L	H	↑	L	L
L	H	↑	H	H
L	H	H	X	Y_0†
L	H	L	X	Y_0‡

† Output level before the indicated steady-state input conditions were established, provided that CLK is high before $\overline{LE}$ goes high
‡ Output level before the indicated steady-state input conditions were established

RECOMMENDED OPERATING CONDITIONS

PARAMETER	MAX or MIN	ALVC 3V	UNIT
I_{CC}	MAX	0.04	mA
I_{OH}	MAX	-12	mA
I_{OL}	MAX	12	mA

SWITCHING CHARACTERISTICS

PARAMETER	INPUT	OUTPUT	MAX or MIN	ALVC 3V
f_{max}			MIN	150
t_w Pulse duration	$\overline{LE}$ low		MIN	3.3
	CLK high or low		MIN	3.3
t_{su} Setup time	Data before CLK ↑		MIN	1.7
	Data before $\overline{LE}$ ↑, CLK high		MIN	1.9
	Data before $\overline{LE}$ ↑, CLK low		MIN	1.5
t_h Hold time	A data after CLK ↑		MIN	0.7
	Data after $\overline{LE}$ ↑, CLK high		MIN	0.9
	Data after $\overline{LE}$ ↑, CLK low		MIN	0.9
t_{PLH}	A	Y	MAX	4.2
t_{PHL}				4.2
t_{PLH}	$\overline{LE}$	Y	MAX	5.8
t_{PHL}				5.8
t_{PLH}	CLK	Y	MAX	5.4
t_{PHL}				5.4
t_{PZH}	$\overline{OE}$	Y	MAX	5.9
t_{PZL}				5.9
t_{PHZ}	$\overline{OE}$	Y	MAX	5
t_{PLZ}				5

UNIT fmax : MHz other : ns

: OBSOLETED or NOT RECOMMENDED NEW DESIGNS

162835

18-BIT UNIVERSAL BUS DRIVER WITH 3-STATE OUTPUTS

- SN74ALVC162835, SN74ALVCH162835: Output Port Has Equivalent 26-Ω Series Resistors

Logic Diagram

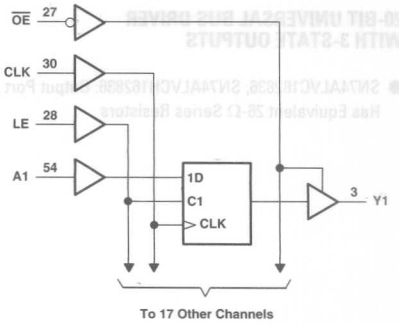

FUNCTION TABLE

INPUTS				OUTPUT
OE	LE	CLK	A	Y
H	X	X	X	Z
L	H	X	L	L
L	H	X	H	H
L	L	↑	L	L
L	L	↑	H	H
L	L	L or H	X	Y_0†

† Output level before the indicated steady-state input conditions were established

RECOMMENDED OPERATING CONDITIONS

PARAMETER	MAX or MIN	ALVC 3V	ALVCH 3V	UNIT
I_{CC}	MAX	0.04	0.04	mA
I_{OH}	MAX	-12	-12	mA
I_{OL}	MAX	12	12	mA

SWITCHING CHARACTERISTICS

PARAMETER	INPUT	OUTPUT	MAX or MIN	ALVC 3V	ALVCH 3V
f_{max}			MIN	150	150
t_w Pulse duration	LE low		MIN	3.3	3.3
	CLK high or low		MIN	3.3	3.3
t_{su} Setup time	Data before CLK ↑		MIN	1.7	1.7
	Data before LE ↓, CLK high		MIN	1.5	1.5
	Data before LE ↓, CLK low		MIN	1	1
t_h Hold time	A data after CLK ↑		MIN	0.7	0.7
	Data after LE ↓, CLK high		MIN	1.4	1.4
	Data after LE ↓, CLK low		MIN	1.4	1.4
t_{PLH}	A	Y	MAX	4.2	4.2
t_{PHL}				4.2	4.2
t_{PLH}	LE	Y	MAX	5.1	5.1
t_{PHL}				5.1	5.1
t_{PLH}	CLK	Y	MAX	5.4	5.4
t_{PHL}				5.4	5.4
t_{PZH}	$\overline{OE}$	Y	MAX	5.5	5.5
t_{PZL}				5.5	5.5
t_{PHZ}	$\overline{OE}$	Y	MAX	4.5	4.5
t_{PLZ}				4.5	4.5

UNIT fmax : MHz other : ns

PRODUCTION DATA information is current as of publication date. Products conform to specifications per the terms of Texas Instruments standard warranty. Production processing does not necessarily include testing of all parameters. See www.ti.com/sc/logic for the most current data sheets.

162836

20-BIT UNIVERSAL BUS DRIVER WITH 3-STATE OUTPUTS

- SN74ALVC162836, SN74ALVCH162836: Output Port Has Equivalent 26-Ω Series Resistors

Logic Diagram

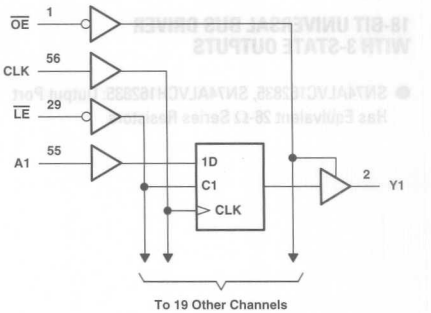

FUNCTION TABLE

INPUTS				OUTPUT
OE	LE	CLK	A	Y
H	X	X	X	Z
L	L	X	L	L
L	L	X	H	H
L	H	↑	L	L
L	H	↑	H	H
L	H	L or H	X	Y_0†

† Output level before the indicated steady-state input conditions were established

RECOMMENDED OPERATING CONDITIONS

PARAMETER	MAX or MIN	ALVC 3V	ALVCH 3V	UNIT
I_{CC}	MAX	0.04	0.04	mA
I_{OH}	MAX	-12	-12	mA
I_{OL}	MAX	12	12	mA

SWITCHING CHARACTERISTICS

PARAMETER	INPUT	OUTPUT	MAX or MIN	ALVC 3V	ALVCH 3V
f_{max}			MIN	150	150
t_w Pulse duration	LE low		MIN	3.3	3.3
	CLK high or low		MIN	3.3	3.3
t_{su} Setup time	Data before CLK ↑		MIN	1.5	1.5
	Data before LE ↓, CLK high		MIN	1.3	1.3
	Data before LE ↓, CLK low		MIN	1.2	1.2
t_h Hold time	A data after CLK ↑		MIN	0.9	0.9
	Data after LE ↓, CLK high		MIN	1.1	1.1
	Data after LE ↓, CLK low		MIN	1.1	1.1
t_{PLH}	A	Y	MAX	4	4
t_{PHL}				4	4
t_{PLH}	LE	Y	MAX	5.1	5.1
t_{PHL}				5.1	5.1
t_{PLH}	CLK	Y	MAX	5	5
t_{PHL}				5	5
t_{PZH}	OE	Y	MAX	5.5	5.5
t_{PZL}				5.5	5.5
t_{PHZ}	OE	Y	MAX	5.1	5.1
t_{PLZ}				5.1	5.1

UNIT fmax : MHz other : ns

: OBSOLETED or NOT RECOMMENDED NEW DESIGNS

162841

20-BIT BUS-INTERFACE D-TYPE LATCH WITH 3-STATE OUTPUTS

- SN74ABT162841: Output Ports Have Equivalent 25-Ω Series Resistors
- SN74ALVCH162841: Output Ports Have Equivalent 26-Ω Series Resistors

Logic Diagram

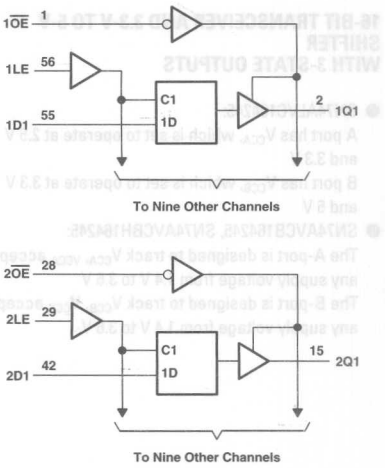

FUNCTION TABLE
(each 10-bit latch)

INPUTS			OUTPUT
$\overline{OE}$	LE	D	Q
L	H	H	H
L	H	L	L
L	L	X	Q_0
H	X	X	Z

RECOMMENDED OPERATING CONDITIONS

PARAMETER	MAX or MIN	ABT	ALVCH 3V	UNIT
I_{CC}	MAX	89	0.04	mA
I_{OH}	MAX	-12	-12	mA
I_{OL}	MAX	12	12	mA

SWITCHING CHARACTERISTICS

PARAMETER	INPUT	OUTPUT	MAX or MIN	ABT	ALVCH 3V
t_w Pulse duration	LE high or low		MIN	4	3.3
t_{su} Setup time	Data before LE ↓		MIN	0.8	1.1
t_h Hold time	Data after LE ↓		MIN	1.8	1.1
t_{PLH}	D	Q	MAX	5.2	4.3
t_{PHL}				6	4.3
t_{PLH}	LE	Q	MAX	5.4	4.7
t_{PHL}				5.8	4.7
t_{PZH}	$\overline{OE}$	Q	MAX	5.7	5.3
t_{PZL}				6.5	5.3
t_{PHZ}	$\overline{OE}$	Q	MAX	6.5	4.4
t_{PLZ}				7.1	4.4

UNIT: ns

PRODUCTION DATA information is current as of publication date. Products conform to specifications per the terms of Texas Instruments standard warranty. Production processing does not necessarily include testing of all parameters. See www.ti.com/sc/logic for the most current data sheets.

- SN74ALVC164245:
  A port has V_{CCA}, which is set to operate at 2.5 V and 3.3 V
  B port has V_{CCB}, which is set to operate at 3.3 V and 5 V
- SN74AVCB164245, SN74AVCBH164245:
  The A-port is designed to track V_{CCA}, V_{CCA} accepts any supply voltage from 1.4 V to 3.6 V
  The B-port is designed to track V_{CCB}, V_{CCB} accepts any supply voltage from 1.4 V to 3.6 V

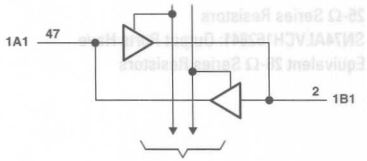

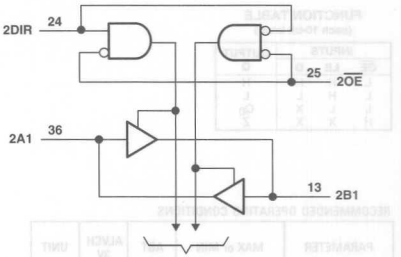

FUNCTION TABLE
(each 8-bit section)

INPUTS		OPERATION
$\overline{OE}$	DIR	
L	L	B data to A bus
L	H	A data to B bus
H	X	Isolation

RECOMMENDED OPERATING CONDITIONS

PARAMETER	MAX or MIN	ALVC	AVCB	AVCBH	UNIT
I_{CC} (5V)	MAX	0.04	-	-	mA
I_{CC} (3V)	MAX	0.02	0.04	0.04	mA
I_{OH} (5V)	MAX	-24	-	-	mA
I_{OL} (5V)	MAX	24	-	-	mA
I_{OH} (2.3V)	MAX	-12	-8	-8	mA
I_{OL} (2.3V)	MAX	12	8	8	mA

SWITCHING CHARACTERISTICS

PARAMETER	INPUT	OUTPUT	MAX or MIN	ALVC		AVCB	AVCBH
				V_{CCB} : 3V V_{CCA} : 2.3V	V_{CCB} : 5V V_{CCA} : 3V	V_{CCB} : 3V V_{CCA} : 2.3V	V_{CCB} : 3V V_{CCA} : 2.3V
t_{PLH}	A	B	MAX	7.6	5.8	3.4	3.4
t_{PHL}				7.6	5.8	3.4	3.4
t_{PLH}	B	A	MAX	7.6	5.8	3.7	3.7
t_{PHL}				7.6	5.8	3.7	3.7
t_{PZL}	$\overline{OE}$	B	MAX	11.5	8.9	5.1	5.1
t_{PZH}				11.5	8.9	5.1	5.1
t_{PZL}	$\overline{OE}$	A	MAX	12.3	9.1	4.2	4.2
t_{PZH}				12.3	9.1	4.2	4.2
t_{PLZ}	$\overline{OE}$	B	MAX	10.5	9.5	3.3	3.3
t_{PHZ}				10.5	9.5	3.3	3.3
t_{PLZ}	$\overline{OE}$	A	MAX	9.3	8.6	3	3
t_{PHZ}				9.3	8.6	3	3

UNIT: ns

: OBSOLETED or NOT RECOMMENDED NEW DESIGNS

322374

3.3-V ABT 32-BIT EDGE-TRIGGERED D-TYPE FLIP-FLOP

- Output Ports Have Equivalent 22-Ω Series Resistors

Logic Diagram

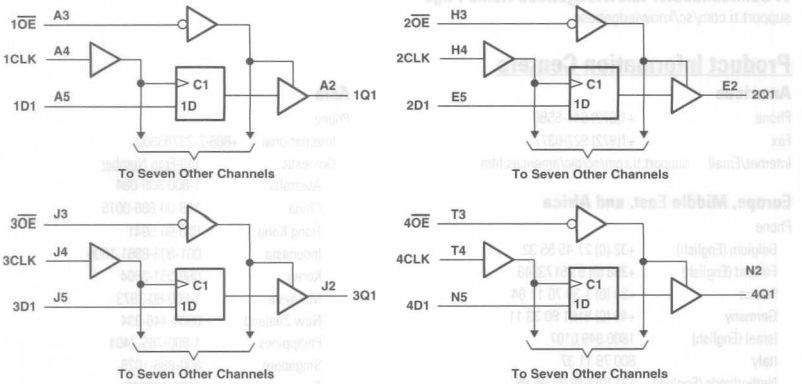

FUNCTION TABLE

(each 8bit flip-flop)

INPUTS			OUTPUT
$\overline{OE}$	CLK	D	Q
L	↑	H	H
L	↑	L	L
L	H or L	X	Q_0
H	X	X	Z

RECOMMENDED OPERATING CONDITIONS

PARAMETER	MAX or MIN	LVTH 3V	UNIT
I_{CC}	MAX	10	mA
I_{OH}	MAX	-12	mA
I_{OL}	MAX	12	mA

SWITCHING CHARACTERISTICS

PARAMETER	INPUT	OUTPUT	MAX or MIN	LVTH 3V
f_{max}				160
t_w Pulse duration, CLK high or low			MIN	3
t_{su} Setup time	Data before CLK ↑, data high		MIN	1.8
	Data before CLK ↑, data low		MIN	1.8
t_h Hold time	Data after CLK ↑, data high		MIN	0.8
	Data after CLK ↑, data low		MIN	0.8
t_{PLH}	CLK	Q	MAX	5.3
t_{PHL}				4.9
t_{PZH}	$\overline{OE}$	Q	MAX	5.6
t_{PZL}				4.9
t_{PHZ}	$\overline{OE}$	Q	MAX	5.4
t_{PLZ}				5

UNIT fmax : MHz other : ns

PRODUCTION DATA information is current as of publication date. Products conform to specifications per the terms of Texas Instruments standard warranty. Production processing does not necessarily include testing of all parameters. See www.ti.com/sc/logic for the most current data sheets.

TI Worldwide Technical Support

Internet

TI Semiconductor Product Information Center Home Page
support.ti.com

TI Semiconductor KnowledgeBase Home Page
support.ti.com/sc/knowledgebase

Product Information Centers

Americas

Phone	+1(972) 644-5580
Fax	+1(972) 927-6377
Internet/Email	support.ti.com/sc/pic/americas.htm

Europe, Middle East, and Africa

Phone	
Belgium (English)	+32 (0) 27 45 55 32
Finland (English)	+358 (0) 9 25173948
France	+33 (0) 1 30 70 11 64
Germany	+49 (0) 8161 80 33 11
Israel (English)	1800 949 0107
Italy	800 79 11 37
Netherlands (English)	+31 (0) 546 87 95 45
Spain	+34 902 35 40 28
Sweden (English)	+46 (0) 8587 555 22
United Kingdom	+44 (0) 1604 66 33 99
Fax	+(49) (0) 8161 80 2045
Email	epic@ti.com
Internet	support.ti.com/sc/pic/euro.htm

Japan

Fax	
International	+81-3-3344-5317
Domestic	0120-81-0036
Internet/Email	
International	support.ti.com/sc/pic/japan.htm
Domestic	www.tij.co.jp/pic

Asia

Phone	
International	+886-2-23786800
Domestic	Toll-Free Number
Australia	1-800-999-084
China	108-00-886-0015
Hong Kong	800-96-5941
Indonesia	001-803-8861-1006
Korea	080-551-2804
Malaysia	1-800-80-3973
New Zealand	0800-446-934
Philippines	1-800-765-7404
Singapore	800-886-1028
Taiwan	0800-006800
Thailand	001-800-886-0010
Fax	886-2-2378-6808
Email	tiasia@ti.com
Internet	support.ti.com/sc/pic/asia.htm

A070802

TEXAS INSTRUMENTS